NOTICE AND AGENDA OF MEETING OF THE
PHOENIX-MESA GATEWAY AIRPORT AUTHORITY
BOARD OF DIRECTORS

Pursuant to A.R.S. § 38-431.02, notice is hereby given to the members of the Phoenix-Mesa Gateway Airport Authority and to the public that the Phoenix-Mesa Gateway Airport Authority will hold a meeting open to the public on **Tuesday, January 19, 2021 beginning at 9:00 a.m.** in the Board Room (Saguaro A & B) of the Gateway Administration Building, 5835 South Sossaman Road, Mesa, Arizona. Members of the Phoenix-Mesa Gateway Airport Authority may attend either in person or by telephone. The Board may vote to hold an executive session for the purpose of obtaining legal advice from the Board's attorney on any matter listed on the agenda pursuant to A.R.S. § 38-431.03 (A)(3)&(4).

The agenda for the meeting is as follows:

1. **Call to Order** (Mayor Gail Barney, Chair)
   Members of the Phoenix-Mesa Gateway Airport Authority will attend either in person or by telephone conference call.

2. **Roll Call** (Mayor Gail Barney, Chair)

3. **Pledge of Allegiance**

4. **Call to the Public**
   Members of the Board may not discuss items that are not on the agenda. Therefore, action taken as a result of public comment will be limited to directing staff to study the matter or scheduling the matter for further consideration and decision at a later date. Maximum of three minutes per speaker.

5. **Executive Director's Report** - J. Brian O'Neill, A.A.E., Executive Director/CEO

6. **GatewayEast Video Presentation** - J. Brian O'Neill, A.A.E., Executive Director/CEO

7. **Consent Agenda**

   a) **Ratification of Consent Agenda** of the Board Meeting held on November 17, 2020.

   b) **Minutes** of the Board Meeting held on November 17, 2020.

   c) **Acceptance of audited financials** as presented by CliftonLarsonAllen at November 17, 2020 Board Meeting**.**

   d) **Resolution No. 21-01 –** Authorizing a purchase with **Tyler Technologies, Inc**. for the Airport's Enterprise Resource Planning (ERP) financial system's annual software maintenance licensing renewals, in an amount not to exceed $53,505.03.

8. **Board Member Comments/Announcements**

9. **Next Meeting: Tuesday, February 16, 2021 at 9:00 a.m.**

10. **Adjournment**

Persons with a disability may request a reasonable accommodation, such as a sign language interpreter, by contacting Misty Johnson at 480-988-7607 or mrjohnson@gatewayairport.com. Requests should be made as early as possible to allow time to arrange the accommodation.

Phoenix-Mesa Gateway Airport

HAPPY New Year

Executive Director's Report

January 2021

Financial Snapshot

OPERATING INCOME	November		Month Variance	FYTD Comparison		FYTD Variance
	FY20	FY21		FY20	FY21	
Revenues	$1,938,912	$1,698,221	($240,691)	$10,064,587	$9,477,748	($586,839)
Less Expenses	$1,867,774	$1,622,343	($245,431)	$8,683,305	$7,835,424	($847,881)
Operating Income *(before depreciation)*	**$71,138**	**$75,878**	**$4,740**	**$1,381,282**	**$1,642,324**	**$261,042**

Investment Fund Balances: As of November, Local Governmental Investment Pool (LGIP) 700 = $19,064,878; Wells Fargo; Collateralized Money Market = $2,162,407 and Collateralized CD's = $21,374,082; Total $42,601,367. PMGAA investments earned $8,508.

Finance and Accounting

In November 2020, commercial passenger activity at Phoenix-Mesa Gateway Airport (Airport, Gateway Airport) was down 29% when compared to the same month last year. This decrease in the number of air travelers passing through the terminal resulted in a comparable decrease in the amount of food, beverage, and retail concession revenue generated during the month.

Operating expenditures during November were $245,431 less than last November and approximately 21% lower than Phoenix-Mesa Gateway Airport Authority's (Authority, PMGAA) Fiscal Year 2021 (FY21) Operating Budget. PMGAA staff continues to closely monitor and control operating expenditures through staffing level adjustments, overtime reductions, and deferment of non-essential purchases and projects.

Through the end of November 2020, PMGAA has submitted a total of $13,922,590 for CARES Act operating grant reimbursements, which is not reflected in the operating results.

PMGAA Solicitations

Active/Pending Solicitations

TYPE OF SOLICITATION	Number	Title	Anticipated Contract Award
Invitation to Bid	2021-018-IFB	Passenger Channelization	February 2021

Future Solicitations

TYPE OF SOLICITATION	Number	Title	Scheduled for Release
Request for Qualifications	2021-016-RFQ	Master Developer – Gateway***East***	January 2021
Invitation for Bid	2021-017-IFB	Alpha Apron Expansion Phase III	May 2021
Request for Proposals	2021-019-RFP	Master Developer – Gateway***East***	May 2021

Airport Operations

Passenger registering for free COVID-19 test at Airport

State of Arizona offers free COVID-19 testing at Gateway Airport

The Arizona Department of Health Services (ADHS), through Paradigm Laboratories, a third party test administrator, is now offering free COVID-19 testing for all ticketed passengers at Gateway Airport as part of the State's multifaceted initiative to help stop the spread of the virus in Arizona. Testing facilities are strategically located adjacent to the concourses and gate areas on the secure side of the Airport's commercial passenger terminal. Testing is available for arriving and departing air travelers but is not open to the public. Test results take 24-48 hours.

The State, through Paradigm Laboratories, has also established a free COVID-19 drive up testing site in Gateway Airport's Ray Road Economy Parking Lot that is open to the general public.

Please visit www.labfinder.com/aza for hours of operation and other testing information.

Operations Statistics

PASSENGER COUNTS		November		% Change	FYTD		% Change
		FY20	FY21		FY20	FY21	
Passengers	**TOTAL**	**136,159**	**97,070**	**-29%**	**634,462**	**433,390**	**-32%**
	Deplaned	69,000	49,758	-28%	324,029	222,556	-31%
	Enplaned	67,159	47,312	-30%	310,433	210,834	-32%
Allegiant	Scheduled	131,830	96,348	-27%	627,544	432,293	-31%
WestJet	Scheduled	1,615	0	-100%	1,795	0	-100%
Swoop	Scheduled	2,584	657	-75%	4,531	803	-82%
Swift	Charter	0	65	100%	0	294	100%
Elite	Charter	130	0	-100%	592	0	-100%

OPERATIONS	November		% Change	FYTD		% Change
	FY20	FY21		FY20	FY21	
Air Carrier	1,084	969	-11%	4,863	4,478	-8%
Military	290	122	-58%	1,280	1,129	-12%
General Aviation	24,192	23,411	-3%	125,045	109,311	-13%
TOTAL	**25,566**	**24,502**	**-4%**	**131,188**	**114,918**	**-12%**

Engineering and Planning

Foundation work for new air traffic control tower

The contractor continues to make progress on the foundation work for Gateway Airport's new air traffic control tower (ATCT, Tower). In December of 2020, 37 eighty-foot deep caissons were installed, and the site was prepped for a 6-foot thick mat foundation slab that will be poured later this month. The foundation is one of the most critical components of the entire construction project.

The Airport's new ATCT is scheduled to be completed in the summer of 2022. Once the project is complete, the Airport and the Federal Aviation Administration (FAA) can begin to transfer operations from the existing Tower over to the new Tower. It is anticipated that the new Tower will be fully operational in early fall 2022.

PMGAA would like to thank Arizona's Congressional Delegation, Governor Ducey and State officials, the City of Mesa and other member communities, and our partners at the FAA for their efforts to make Gateway Airport's new ATCT possible. Thank you!

Gateway Aviation Services

The hard-working team at PMGAA's Gateway Aviation Services Department pumped more than 1.4MM gallons of aviation fuel during the month of November. The vast majority of the 17MM+ total gallons pumped each year goes into Allegiant's large fleet of Airbus 319 and 320 aircraft based at Gateway Airport.

Aviation fuel is an important revenue source for PMGAA that represents millions of dollars each year to support the Airport's ongoing operation and a scheduled maintenance and improvement program for Airport facilities and infrastructure.

There are also several large private aeronautical development projects currently underway at Gateway Airport. Gateway Aviation Services is ready to welcome and provide fuel for all our new Airport tenants.

FUEL (Gallons)	November			FYTD		
	FY20	FY21	% Change	FY20	FY21	% Change
Retail (Jet A)	44,065	32,867	-25%	230,041	201,950	-12%
AvGas	59,838	60,687	1%	296,048	290,853	-2%
Contract	353,623	241,246	-32%	1,744,471	2,145,709	23%
Commercial	1,122,576	1,073,972	-4%	5,077,145	5,082,016	0%
TOTAL	**1,580,102**	**1,408,772**	**-11%**	**7,347,705**	**7,720,528**	**5%**

Community Noise Report

CALLERS	November		FYTD	
	FY20	FY21	FY20	FY21
Total	16	7	50	46

AIRCRAFT TYPE	November		FYTD	
	FY20	FY21	FY20	FY21
	Callers	Callers	Callers	Callers
Commercial	8	2	36	18
GA Total	2	4	5	21
Helicopter	4	0	4	0
Military	2	1	5	7
Total	16	7	50	46

LOCATION	November		FYTD	
	FY20	FY21	FY20	FY21
Mesa	3	1	24	14
Gilbert	8	2	16	11
Gold Canyon	0	1	0	8
Queen Creek	3	1	5	6
Queen Valley	1	1	1	4
San Tan Valley	1	0	3	0
Apache Junction	0	1	1	2
Chandler	0	0	0	1
TOTAL	16	7	50	46

During the month of November 2020, PMGAA received aircraft noise calls from a total of seven area residents. This compares to the 16 callers that contacted the Airport about aircraft noise last November.

Business Development

Gateway Airport is much more than just a thriving regional airport. It's a 3,000-acre economic development project that is fortunate to have a commercial service airport and three, 10,000-foot runways as part of its critical infrastructure. Aeronautical and non-aeronautical private development is a major cornerstone of Gateway Airport's continued success.

Rendering of a possible GatewayEast development concept

Two years ago, PMGAA entered into a long-term master developer agreement with Mesa SkyBridge, LLC to develop 360-acres of mostly aeronautical land located at the south end of the Airport. Since that time, SkyBridge Arizona was born and the developer has constructed a 53,000 SF industrial building, an 82,500 SF hangar, and is in the planning process for a 127-room dual brand hotel.

On January 14, 2021, PMGAA is hosting a virtual event to introduce another master development opportunity located on the east side of the Airport called Gateway***East***. This 400-acre mixed use non-aeronautical development opportunity is strategically situated adjacent to Ellsworth Road, the expanding SR 24, and the Loop 202 San Tan Freeway. PMGAA is inviting experienced large-scale developers nationwide to participate in the event.

Marketing and Community Relations

PMGAA welcomes three new Board members

Airports across the country operate under several different governance structures. Some airports are guided by an independent port or airport authority with a board of directors; others are a department of a city, county, or state government; and very few are operated by a for-profit organization. Gateway Airport is a joint powers authority, which is a unique hybrid governance structure in the airport industry.

A joint powers authority is an entity where two or more public authorities (e.g. local governments) jointly exercise any power common to all of them. PMGAA joint powers authority members include the Cities of Mesa, Phoenix, and Apache Junction; the Towns of Gilbert and Queen Creek; and the Gila River Indian Community. Each member community selects an elected official to serve as their representative on the PMGAA Board of Directors.

In January 2021, PMGAA will welcome three new Board members:

Brigette Peterson, Mayor
Town of Gilbert

Mayor Peterson is a former Gilbert Town Council member and Vice Mayor. She served on the Gilbert Planning Commission for 14 years before being elected to the Town Council in 2014. Mayor Peterson is active in the Gilbert community and has served in leadership positions with the Gilbert Chamber of Commerce and other civic organizations.

Monica Antone, Lieutenant Governor
Gila River Indian Community

Welcome back Lt. Governor Antone! The Gila River Indian Community (GRIC) is an active member of PMGAA and an adjacent landowner to Gateway Airport. Lt. Governor Antone was first elected to the GRIC Tribal Council in 2012 and was recently re-elected in 2020. She has been a leading voice on many important issues including domestic violence, sexual assault, and mental health.

Chip Wilson, Mayor
City of Apache Junction

Mayor Wilson retired from the U.S. Air Force after 22 years of service and worked for the Boeing Co. for 17 years until his retirement in 2018. He has served on the Apache Junction City Council since 2007, last serving as Vice Mayor. An avid horseman, Mayor Wilson previously served as president of the Superstition Horsemen's Association and is currently president of the Arizona Horse Council.

MINUTES OF PUBLIC MEETING OF THE
PHOENIX-MESA GATEWAY AIRPORT AUTHORITY
BOARD OF DIRECTORS | November 17, 2020

A public meeting of the Phoenix-Mesa Gateway Airport Authority (PMGAA) was convened on Tuesday, November 17, 2020, beginning at 9:00 a.m. in the Board Room (Saguaro A&B) of the Gateway Administration Building, 5835 S Sossaman Road, Mesa, Arizona.

Members Present

Mayor Gail Barney, Queen Creek
Councilwoman Thelda Williams, Phoenix (*via videoconference*)
Mayor John Giles, Mesa (*via videoconference*)
Councilmember Scott September, Gilbert
Mayor Jeff Serdy, Apache Junction
Lt. Governor Robert Stone, Gila River Indian Community (*via videoconference*)

** Neither present nor represented*

Airport Staff Present

J. Brian O'Neill, Executive Director/CEO
Scott Brownlee, Deputy Director/COO
Chuck Odom, CFO
Misty Johnson, Clerk of the Board
Jill Casson Owen, Attorney (*via videoconference*)

1. **Call to Order** at 9:01 a.m. (Mayor Barney)

2. **Roll Call.**

3. **Pledge of Allegiance.**

4. **Call to the Public.**
   There were no public comments.

5. **Executive Director's Report.** J. Brian O'Neill, A.A.E., Executive Director/CEO
   Executive Director O'Neill provided a briefing on PMGAA financial performance, passenger activity, the community noise report, and various Airport projects.
   - Fiscal Year-to-Date (FYTD) Net Operating Income is $983,546.
   - Commercial passenger statistics show continued recovery, with Gateway Airport down 22% compared to the same time period last year.
   - Allegiant has added two new non-stop destinations. Service to Santa Maria, California begins on November 19th and service to Houston, Texas will begin on February 11th.
   - Construction on SkyBridge Arizona's 82,500 SF hangar will be complete the first week of December. The APS hangar is progressing and is scheduled to be completed by the second week of February 2021. Wetta Ventures has received a Certificate of Occupancy for their 50,000 SF hangar and is hopeful that a tenant will take possession of the facility at the beginning of the new year.
   - Deputy Director Brownlee provided an update on the recent successful annual TSA Security Inspection with no reportable conditions. He recognized the efforts of PMGAA's Security, Operations, and Maintenance Team for their exceptional work.
   - A groundbreaking event for SkyBridge Arizona's hotel project will be held today at 10:30 a.m. for a limited number of invited guests. The hotel will offer two Wyndham Hotel brands (Hawthorne and Wingate).

DRAFT

- PMGAA has begun the process of identifying a qualified and experienced development partner for Gateway*East,* a 400-acre mixed use development opportunity located on the east side of the Airport. A Request for Qualifications (RFQ) will be released during the first quarter of 2021.
- Due to COVID-19 safety concerns and public gathering limitations, a virtual ground-breaking video for the new Air Traffic Control Tower is being created to help recognize the many individuals that made the important infrastructure project a reality. The video will be shared with the PMGAA Board; member communities; federal, state, and local elected officials; the Federal Aviation Administration; the national media; and other key stakeholder groups.
- The relocation of the Ellsworth Channel and the construction of the Hawes Road bridge will be completed by the end of the year. This important $11M project is being funded through Passenger Facility Charges (PFCs). A future, demand-driven commercial passenger terminal will be accessed from the Loop 202 San Tan Freeway by Hawes Road.
- PMGAA is continuing to improve commercial passenger terminal concessions. A ribbon-cutting event for the opening of the new Panera Bread restaurant will be held on November 18th. This marks the third new concession this year; O.H.S.O. Brewery and the Saguaro Mercantile also opened during 2020. Macayo's Mexican Restaurant and the new Infusion Tea & Coffee will be completed in 2021.

6. **Presentation: Draft Audited Financials. –** Sandra Cronstrom, Principal – CliftonLarsonAllen, LLP

Ms. Cronstrom provided a brief overview of the Fiscal Year 2020 Draft Audited Financials, which will result in an issuance of an unmodified (clean) opinion for the Phoenix-Mesa Gateway Airport Authority. No material audit adjustments were made. The audit is substantially complete but not finalized due to the federal government not yet releasing final guidance on the Coronavirus Aid, Relief, and Economic Security (CARES) Act grants. The audit was tested under federal guidance available to date with no findings or recommendations. Once the audited financials have been finalized, they will be presented to the Board for acceptance.

Chuck Odom, PMGAA CFO thanked Ms. Cronstrom for presenting to the Board. He also thanked the finance team for their efforts in this successful independent audit. Normally, the Board would accept the report as presented at this time.

7. **Consent Agenda.**

a) **Minutes** of the Board Meeting held on **October 20, 2020.**

b) **Resolution No. 20-46** Authorizing the purchase of **airfield lighted signs and parts from ADB Safegate** in an amount not to exceed $115,103.47.

c) **Resolution No. 20-47** Adopting the amended **Investment Policy** with an effective date of November 17, 2020.

d) **Resolution No. 20-48** Authorizing the purchase of one vehicle from **San Tan Auto Partners, LLC** dba San Tan Ford (San Tan Ford) not to exceed $51,046.15.

e) **Resolution No. 20-49** Authorizing the purchase of a landscape irrigation control system from **Global Data Specialist** in an amount not to exceed $105,228.48.

f) **Resolution No. 20-50** Approval of Authorization of Services for Taxiway W Rehabilitation Design Services with **Kimley-Horn & Associates** in an amount not to exceed $54,576 under CIP 744.

The Consent Agenda was approved unanimously.

Consideration and Possible Approval of:

8. **Resolution No. 20-51** Authorizing amendment of the FY21 Capital Improvement Program to include project CIP 719 Alpha Apron Expansion Phase III not to exceed $6.3 million.

Mayor Jeff Serdy moved to approve Resolution No. 20-51.
Councilwoman Thelda Williams seconded the motion.
The motion was carried unanimously.

9. **Resolution No. 20-52** Approval of Authorization of Services for Alpha Apron Expansion Phase III Design Repackage Engineering Design Services with **Kimley-Horn & Associates** in an amount not to exceed $78,234 under CIP 719.

Councilwoman Thelda Williams moved to approve Resolution No. 20-52.
Mayor Jeff Serdy seconded the motion.
The motion was carried unanimously.

10. **Board Member Comments/Announcements.**
Mayor Serdy introduced his successor Apache Junction Mayor-Elect Chip Wilson. Lt. Governor Stone announced his last meeting will be December 15th. Lt. Governor-Elect Monica Antone will represent the Gila River Indian Community on the Board beginning in January. Mayor Barney thanked the outgoing Board members for their service.

11. **Next Meeting: Tuesday, December 15, 2020** at 9:00 a.m. in the Board Room (Saguaro A&B) of the Gateway Administration Building, 5835 S Sossaman Road, Mesa, Arizona. Members of the Phoenix-Mesa Gateway Airport Authority may attend either in person or by telephone/videoconference.

12. **Adjournment.**
The meeting adjourned at 9:35 a.m.

Dated this _____ day of _____ 2020.

_____
Misty Johnson, Clerk of the Board

Phoenix-Mesa Gateway Airport Authority
5835 S Sossaman Road
Mesa, Arizona 85212-6014
www.gatewayairport.com

Board Action Item

Re: Resolution 21-01

To:	**Board of Directors**
From:	**Doug Wirthgen, Information Technology Director**
Through:	**Scott Brownlee, Deputy Director/COO**
	J. Brian O'Neill, A.A.E., Executive Director/CEO
Subject:	**Tyler Technologies, Inc. Software License Renewals**
Date:	**January 19, 2021**

Proposed Motion
To authorize a purchase with Tyler Technologies, Inc. for the Airport's Enterprise Resource Planning (ERP) financial system's annual software maintenance licensing renewals, in an amount not to exceed $53,505.03.

Narrative
In December 2016, the Board authorized the replacement of the existing financial system with Tyler Technologies, Inc. for an ERP financial system. The software with this ERP financial system requires annual licensing renewals.

Board authorization for the purchase of the Tyler Technologies, Inc. annual software maintenance licensing renewals is necessary to continue use of the ERP financial system software.

In compliance with the Airport's Procurement Policy No. 18-41, purchases excluded from multiple quotations/competitive selection requirements include hardware and software licensing renewals and maintenance support.

Fiscal Impact
This purchase was included in the FY21 ITS Operating Budget.

Attachment(s)
Quote

RESOLUTION NO. 21-01

WHEREAS, the Phoenix-Mesa Gateway Airport Authority ("Authority"), a joint powers airport authority formed pursuant to Arizona Revised Statute §28-8521 *et seq.* owns and operates the Phoenix-Mesa Gateway Airport ("Airport"); and

WHEREAS the Authority desires to authorize a purchase with Tyler Technologies, Inc. for the Airport's Enterprise Resource Planning (ERP) financial system's annual software maintenance licensing renewals, in an amount not to exceed $53,505.03;

NOW, THEREFORE, BE IT RESOLVED by the Board of Directors of the Authority as follows:

> **The Board of Directors of the Authority hereby approves a purchase with Tyler Technologies, Inc. for the Airport's Enterprise Resource Planning (ERP) financial system's annual software maintenance licensing renewals, in an amount not to exceed $53,505.03. This resolution also authorizes the Chair or Executive Director/CEO to execute such Authorization of Services, with such insertions, deletions, and changes as may be approved by the Chair or Executive Director/CEO, necessary to carry out the purposes and intent of this Resolution.**

Passed and adopted by the Authority this 19th day of January, 2021.

_____
Gail Barney, Chair

ATTEST:

_____
Misty Johnson, Clerk of the Board

APPROVED AS TO FORM:

_____
Jill Casson Owen, Attorney

Invoice

Remittance:
Tyler Technologies, Inc.
(FEIN 75-2303920)
P.O. Box 203556
Dallas, TX 75320-3556

Invoice No	Date	Page
045-324391	01/01/2021	1 of 2

Questions:
Tyler Technologies - ERP & Schools
Phone: 1-800-772-2260 Press 2, then 1
Email: ar@tylertech.com

Bill To: Phoenix-Mesa Gateway Airport
Attn: Doug Wirthgen
5835 South Sossaman Road
Mesa, AZ 85212-0919

Ship To: Phoenix-Mesa Gateway Airport
Attn: Doug Wirthgen
5835 South Sossaman Road
Mesa, AZ 85212-0919

Cust No.-BillTo-ShipTo	Ord No	PO Number	Currency	Terms	Due Date
51468 - MAIN - MAIN	149606		USD	NET45	02/15/2021

Date	Description	Units	Rate	Extended Price
Contract No.: PHOENIX-MESA GATEWAY				
	SUPPORT & UPDATE LICENSING - TYLER FORMS PROCESSING	1	1,823.26	1,823.26
	Maintenance: Start: 01/Feb/2021, End: 31/Jan/2022			
	SUPPORT & UPDATE LICENSING - ACCTG/GL/BUDGET/AP	1	6,344.94	6,344.94
	Maintenance: Start: 01/Feb/2021, End: 31/Jan/2022			
	SUPPORT & UPDATE LICENSING - ACCOUNTS RECEIVABLE	1	1,444.02	1,444.02
	Maintenance: Start: 01/Feb/2021, End: 31/Jan/2022			
	SUPPORT & UPDATE LICENSING - PROJECT & GRANT ACCOUNTING	1	1,312.75	1,312.75
	Maintenance: Start: 01/Feb/2021, End: 31/Jan/2022			
	SUPPORT & UPDATE LICENSING - CASH MANAGEMENT	1	1,093.95	1,093.95
	Maintenance: Start: 01/Feb/2021, End: 31/Jan/2022			
	SUPPORT & UPDATE LICENSING - FIXED ASSETS	1	1,684.69	1,684.69
	Maintenance: Start: 01/Feb/2021, End: 31/Jan/2022			
	SUPPORT & UPDATE LICENSING - PURCHASING	1	2,778.66	2,778.66
	Maintenance: Start: 01/Feb/2021, End: 31/Jan/2022			
	SUPPORT & UPDATE LICENSING - GENERAL BILLING	1	656.38	656.38
	Maintenance: Start: 01/Feb/2021, End: 31/Jan/2022			
	SUPPORT & UPDATE LICENSING - ePROCUREMENT	1	1,093.95	1,093.95
	Maintenance: Start: 01/Feb/2021, End: 31/Jan/2022			
	SUPPORT & UPDATE LICENSING - MUNIS ANALYTICS & REPORTING	1	5,994.88	5,994.88
	Maintenance: Start: 01/Feb/2021, End: 31/Jan/2022			
	SUPPORT & UPDATE LICENSING - TYLER CASHIERING	1	2,406.71	2,406.71
	Maintenance: Start: 01/Feb/2021, End: 31/Jan/2022			
	Support & Update Licensing - ExecuTime Advanced Scheduling Maintenance	1	2,347.66	2,347.66
	Maintenance: Start: 01/Feb/2021, End: 31/Jan/2022			
	Support & Update Licensing - ExecuTime & Attendance Mobile Access Maintenance	1	1,174.99	1,174.99
	Maintenance: Start: 01/Feb/2021, End: 31/Jan/2022			
	Support & Update Licensing - ExecuTime Advanced Scheduling Mobile Access Module Maintenance	1	920.31	920.31
	Maintenance: Start: 01/Feb/2021, End: 31/Jan/2022			
	Support & Update Licensing - ExecuTime & Attendance Maintenance	1	2,824.61	2,824.61
	Maintenance: Start: 01/Feb/2021, End: 31/Jan/2022			
	SUPPORT & UPDATE LICENSING - INVENTORY	1	1,489.87	1,489.87
	Maintenance: Start: 01/Feb/2021, End: 31/Jan/2022			
	SUPPORT & UPDATE LICENSING - HUMAN RESOURCES & TALENT MANAGEMENT	1	1,604.47	1,604.47
	Maintenance: Start: 01/Feb/2021, End: 31/Jan/2022			
	SUPPORT & UPDATE LICENSING - BMI CollectIT INTERFACE	1	458.42	458.42

Invoice

Remittance:
Tyler Technologies, Inc.
(FEIN 75-2303920)
P.O. Box 203556
Dallas, TX 75320-3556

Invoice No	Date	Page
045-324391	01/01/2021	2 of 2

Questions:
Tyler Technologies - ERP & Schools
Phone: 1-800-772-2260 Press 2, then 1
Email: ar@tylertech.com

Bill To: Phoenix-Mesa Gateway Airport
Attn: Doug Wirthgen
5835 South Sossaman Road
Mesa, AZ 85212-0919

Ship To: Phoenix-Mesa Gateway Airport
Attn: Doug Wirthgen
5835 South Sossaman Road
Mesa, AZ 85212-0919

Cust No.-BillTo-ShipTo	Ord No	PO Number	Currency	Terms	Due Date
51468 - MAIN - MAIN	149606		USD	NET45	02/15/2021

Date	Description	Units	Rate	Extended Price
	Maintenance: Start: 01/Feb/2021, End: 31/Jan/2022			
	SUPPORT & UPDATE LICENSING - WORK ORDERS, FLEET & FACILITIES	1	1,864.94	1,864.94
	Maintenance: Start: 01/Feb/2021, End: 31/Jan/2022			
	SUPPORT & UPDATE LICENSING - PAYROLL W/ESS	1	3,354.80	3,354.80
	Maintenance: Start: 01/Feb/2021, End: 31/Jan/2022			
	SUPPORT & UPDATE LICENSING - BMI ASSET TRACK INTERFACE	1	458.42	458.42
	Maintenance: Start: 01/Feb/2021, End: 31/Jan/2022			
	SUPPORT & UPDATE LICENSING - CONTRACT MANAGEMENT	1	654.89	654.89
	Maintenance: Start: 01/Feb/2021, End: 31/Jan/2022			
	SUPPORT & UPDATE LICENSING - EMPLOYEE EXPENSE REIMBURSEMENT	1	793.80	793.80
	Maintenance: Start: 01/Feb/2021, End: 31/Jan/2022			
	SUPPORT & UPDATE LICENSING - BID MANAGEMENT	1	710.01	710.01
	Maintenance: Start: 01/Feb/2021, End: 31/Jan/2022			
	ANNUAL PAYROLL TAX TABLE UPDATE	1	1,050.00	1,050.00
	Maintenance: Start: 01/Feb/2021, End: 31/Jan/2022			
	Maintenance: Start: 01/Feb/2021, End: 31/Jan/2022			
	Tyler Content Manager Annual Fees	1		$3,063.08

****ATTENTION****
Order your checks and forms from Tyler Business Forms at 877-749-2090 or tylerbusinessforms.com to guarantee 100% compliance with your software.

Subtotal	49,404.46
Sales Tax	4,100.57
Invoice Total	53,505.03

Phoenix-Mesa Gateway Airport Authority
5835 S Sossaman Road
Mesa, Arizona 85212-6014
www.gatewayairport.com

Management Information Report

To: Board of Directors
From: Chuck Odom, Chief Financial Officer
Through: J. Brian O'Neill, A.A.E., Executive Director/CEO
Re: November 2020 Financials
Date: January 19, 2021

Attached is the monthly Financials Report for November 2020.

Phoenix-Mesa Gateway Airport Authority
AIRPORT - All Operations P&L
November, 2020

	Month of November 2020				Y-T-D as of November 2020			
	Nov FY20 Actual	Nov FY21 Actual	YOY Variance	B/(W)	YTD FY20 Actual	YTD FY21 Actual	Y-T-D Variance	B/(W)
Aeronautical Operating Revenues								
Aircraft Parking	18,984	28,578	9,594	51%	83,575	103,401	19,826	24%
Fuel Flowage Fees	45,813	45,321	(492)	-1%	263,244	324,530	61,286	23%
Landing Fees	111,078	130,864	19,786	18%	509,814	574,552	64,738	13%
Lease Income Aero	199,866	200,131	265	0%	1,422,269	1,093,440	(328,829)	-23%
Fuel Sales	557,097	438,444	(118,653)	-21%	2,695,525	2,305,063	(390,462)	-14%
Services Sold - Aero	423,194	351,499	(71,695)	-17%	1,979,830	2,748,119	768,289	39%
Sub-total Aero Operating Revenues	1,356,032	1,194,837	(161,195)	-12%	6,954,257	7,149,105	194,848	2.8%
Non-Aeronautical Operating Revenues								
Concessions	72,073	65,039	(7,034)	-10%	325,900	253,596	(72,304)	-22%
Lease Income Non-Aero	101,325	106,026	4,701	5%	492,223	524,746	32,523	7%
Parking	252,137	198,291	(53,846)	-21%	1,664,229	1,149,993	(514,236)	-31%
Rental Car Fees	152,746	130,917	(21,829)	-14%	584,701	380,657	(204,044)	-35%
Svcs Sold - Non Aero	4,599	3,111	(1,488)	-32%	43,277	19,651	(23,626)	-55%
Sub-total Non-Aero Operating Revenues	582,880	503,384	(79,496)	-14%	3,110,330	2,328,643	(781,687)	-25%
Total Operating Revenues	**1,938,912**	**1,698,221**	**(240,691)**	**-12%**	**10,064,587**	**9,477,748**	**(586,839)**	**-6%**
Operating Expenses								
Costs of Goods Sold	349,906	235,095	114,811	33%	1,668,876	1,221,035	447,841	27%
Personnel	817,834	714,042	103,792	13%	3,723,567	3,489,861	233,706	6%
Comm & Utilities	49,727	62,504	(12,777)	-26%	405,336	421,708	(16,372)	-4%
Contractual Services	442,246	401,059	41,187	9%	1,845,125	1,915,035	(69,910)	-4%
Insurance	44,032	43,630	402	1%	209,643	219,570	(9,927)	-5%
Other	17,303	5,120	12,183	70%	188,731	57,650	131,081	69%
Repair & Maintenance	49,129	56,075	(6,946)	-14%	209,611	195,692	13,919	7%
Supplies & Materials	97,597	104,818	(7,221)	-7%	432,416	314,873	117,543	27%
Air Service Incentives [2,000,000]	0	0	0	0	0	0	0	0
Operating Contingency [2,313,872]	0	0	0	0	0	0	0	0
Total Operating Expenses	**1,867,774**	**1,622,343**	**245,431**	13%	**8,683,305**	**7,835,424**	**847,881**	10%
Operating Income (Loss)	**71,138**	**75,878**	**4,740**	7%	**1,381,282**	**1,642,324**	**261,042**	19%
	3.7%	4.5%			13.7%	17.3%		
Depreciation		1,380,301				7,263,646		
CARES Act Recovery		1,713,931				6,897,705		
Total-to-Date CARES Act Recovery		13,922,590						

Phoenix-Mesa Gateway Airport Authority
5835 S Sossaman Road
Mesa, Arizona 85212-6014
www.gatewayairport.com

Management Information Report

To: **Board of Directors**
From: **Chuck Odom, Chief Financial Officer**
Through: **J. Brian O'Neill, A.A.E., Executive Director/CEO**
Re: Solicitation Notification
Date: **December 17, 2020**

This report is to provide notification of the active and upcoming solicitations to help ensure compliance with the Phoenix-Mesa Gateway Airport Authority procurement transparency clause. The active activities include the following:

Active/Pending Solicitations

Type Solicitation	Number	Title	Anticipated Contract Award (Board Action)
Invitation for Bid	2021-018-IFB	Passenger Channelization	February 2021

Future Solicitations

Type Solicitation	Number	Title	Scheduled for Release	Anticipated Contract Award (Board Action)
Request for Qualifications	2021-016-RFQ	Master Developer, Gateway East	January 2021	List Creation
Invitation for Bid	2021-017-IFB	Alpha Apron Expansion Phase III	May 2021	July 2021
Request for Proposals	2021-019-RFP	Master Developer, Gateway East	May 2021	October 2021

Equipment Disposals

Fiscal year totals from sales of decommissioned / nonworking equipment total $8,460.

If you have any questions about the solicitations or the procurement process, please feel free to contact me at 480-988-7613.

Phoenix-Mesa Gateway Airport

Notice of Meeting Cancellation

Pursuant to A.R.S. § 38-431.02, notice is hereby given to the public that the Regular Meeting of the Phoenix-Mesa Gateway Airport Authority Board of Directors scheduled for Tuesday, February 16, 2021, has been cancelled.

The next Regular Meeting of the Phoenix-Mesa Gateway Airport Authority Board of Directors is scheduled for Tuesday, March 16, 2021 at 9:00 a.m. in the Board Room (Saguaro A & B) of the Gateway Administration Building, 5835 South Sossaman Road, Mesa, Arizona. The Board may vote to hold an executive session for the purpose of obtaining legal advice from the Board's attorney on any matter listed on the agenda pursuant to A.R.S. § 38-431.03 (A)(3)&(4).

DATED this 11th day of February, 2021.

I Misty Johnson, do hereby certify that I caused to be posted this 11th day of February, 2021, the Notice of Cancellation of the February 16, 2021 Phoenix-Mesa Gateway Airport Authority Board of Directors Meeting in the following places: 1) www.gatewayairport.com ; 2) Gateway Administration Building.

Misty Johnson

Misty Johnson, Clerk of the Board

NOTICE AND AGENDA OF MEETING OF THE
PHOENIX-MESA GATEWAY AIRPORT AUTHORITY
BOARD OF DIRECTORS

Pursuant to A.R.S. § 38-431.02, notice is hereby given to the members of the Phoenix-Mesa Gateway Airport Authority and to the public that the Phoenix-Mesa Gateway Airport Authority will hold a meeting open to the public on **Tuesday, March 16, 2021 beginning at 9:00 a.m.** in the Board Room (Saguaro A & B) of the Gateway Administration Building, 5835 South Sossaman Road, Mesa, Arizona. Members of the Phoenix-Mesa Gateway Airport Authority may attend either in person or by telephone. The Board may vote to hold an executive session for the purpose of obtaining legal advice from the Board's attorney on any matter listed on the agenda pursuant to A.R.S. § 38-431.03 (A)(3)&(4).

The agenda for the meeting is as follows:

1. **Call to Order** (Mayor Gail Barney, Chair)
   Members of the Phoenix-Mesa Gateway Airport Authority will attend either in person or via videoconference.

2. **Roll Call** (Mayor Gail Barney, Chair)

3. **Pledge of Allegiance**

4. **Call to the Public**
   Members of the Board may not discuss items that are not on the agenda. Therefore, action taken as a result of public comment will be limited to directing staff to study the matter or scheduling the matter for further consideration and decision at a later date. Maximum of three minutes per speaker.

5. **Executive Director's Report** - J. Brian O'Neill, A.A.E., Executive Director/CEO

6. **Consent Agenda**

   a) **Minutes** of the Board Meeting held on January 19, 2021.

   b) **Resolution No. 21-02 –** Authorizing the purchase of materials and the installation of the structures to provide **Passenger Channelization** to and from the Terminal in an amount not-to-exceed $62,950 under CIP 1212.

   c) **Resolution No. 21-03 –** Authorizing the filing of **grant applications** including agreeing to all understandings and assurances contained therein; and, authorizing the acceptance and execution of any Federal Aviation Administration (FAA) or other Federal Agency, State of Arizona, Arizona County or Arizona Local Municipal grant offer(s), applied for or received between July 1, 2021 and June 30, 2022 by the Chair of the Authority, the Executive Director/CEO, Deputy Director/COO or Chief Financial Officer/CFO .

   d) **Resolution No. 21-04 –** Authorizing the purchase of airfield asphalt repair services with **Ace Asphalt of Arizona, Inc**. for an amount not to exceed $121,396.24.

   e) **Resolution No. 21-05 –** Authorizing an Adjustment Amendment to the Master Lease Agreement with **SkyBridge, LLC** for the property located at the southeast corner of Sossaman Road and Velocity Way.

7. **FY22 Budget Presentation** – Chuck Odom, Chief Financial Officer

Consideration and Possible Approval of:

8. **Resolution No. 21-06 –** Adoption of the proposed **Operating Budget, Capital Budget, and Member Government Contributions** for the fiscal year ending June 30, 2022.

9. **Resolution No. 21-07 –** Adoption of the revised **Airport Rates and Charges** schedule with an effective date of April 1, 2021.

10. **Board Member Comments/Announcements**

11. **Next Meeting: Tuesday, April 20, 2021 at 9:00 a.m.**

12. **Adjournment**

Persons with a disability may request a reasonable accommodation, such as a sign language interpreter, by contacting Misty Johnson at 480-988-7607 or mrjohnson@gatewayairport.com. Requests should be made as early as possible to allow time to arrange the accommodation.

Phoenix-Mesa Gateway Airport

Executive Director's Report

March 2021

Financial Snapshot

OPERATING INCOME	January		Month Variance	FYTD Comparison		FYTD Variance
	FY20	FY21		FY20	FY21	
Revenues	$2,283,624	$1,597,614	($686,010)	$14,338,879	$12,595,315	($1,743,564)
Less Expenses	$1,597,217	$1,623,753	$26,536	$12,059,765	$11,080,433	($979,332)
Operating Income *(before depreciation)*	**$686,407**	**($26,139)**	**($712,546)**	**$2,279,114**	**$1,514,882**	**($764,232)**

Investment Fund Balances: As of January, Local Governmental Investment Pool (LGIP) 700 = $19,079,019; Wells Fargo; Collateralized Money Market = $589,090 and Collateralized CD's = $31,092,133; Total $50,760,243. PMGAA investments earned $32,008 and $4,100,000 was transferred from general operating accounts during January.

Finance and Accounting

The Coronavirus Response and Relief Supplemental Appropriation Act (CRRSAA) signed into law on December 27, 2020, includes nearly $2 billion in funds to be awarded as economic relief to eligible U.S. airports and eligible concessions at those airports to prevent, prepare for, and respond to the coronavirus (COVID-19) pandemic. Phoenix-Mesa Gateway Airport Authority (PMGAA, Authority) is scheduled to receive a CRRSAA Grant of approximately $4.1MM to be used for the continued operation of Phoenix-Mesa Gateway Airport (Airport, Gateway Airport). Commercial passenger terminal concessionaires – food, beverage, retail, advertising, and rental car – will receive a share of almost $189,000 to supplement their ongoing operations at Gateway Airport.

PMGAA Solicitations

Active/Pending Solicitations

TYPE OF SOLICITATION	Number	Title	Anticipated Contract Award
Invitation to Bid	2021-018-IFB	Passenger Channelization	March 2021
Request for Qualifications	2021-016-RFQ	Master Developer for Gateway***East***	Qualifications Due March 22, 2021

Future Solicitations

TYPE OF SOLICITATION	Number	Title	Scheduled for Release
Request for Proposals	2021-021-RFP	Janitorial Services	March 2021
Request for Qualifications	2021-023-RFQ	Fabrication & Installation of Signs	April 2021
Invitation for Bid	2021-022-IFB	ATC Communication Radios	April 2021
Invitation for Bid	2021-017-IFB	Alpha Apron Expansion Phase III	May 2021
Request for Proposals	2021-019-RFP	Master Developer for Gateway***East***	May 2021

Airport Operations

The COVID-19 Pandemic: One Year Later…

It's March 2021 and PMGAA has been operating Gateway Airport for one year since the COVID-19 pandemic significantly impacted operations and activities at airports across the globe. During the initial stages of the virus outbreak, airport operators worked quickly to modify terminals, constructing barriers and implementing physical distancing requirements designed to help stop the spread of the contagious virus among employees, air travelers, and other airport visitors. At Gateway, terminal modifications included, but were not limited to, installing plexiglass at airline ticket counters and the TSA Security Screening Checkpoint; reduced seating capacity; signage and floor/seat decals promoting physical distancing; increased cleaning/sanitizing of high-touch areas; and establishing hand sanitizing stations throughout terminal.

Allegiant and the other U.S. airlines are working hard to increase consumer confidence and get more air travelers flying again by requiring all passengers to wear a mask, performing enhanced and frequent aircraft cleanings, and increasing flexibility for ticket changes and refunds. Industry experts believe leisure travel will be the first segment to return, followed by business and then international travel.

Commercial activity at Gateway Airport has steadily recovered since its low point in April 2020 when the Airport reported a 93% decrease in passengers for the month when compared to the record-setting activity in April 2019. Monthly activity reports reveal that Gateway Airport is now down approximately 20% – 40% each month depending on both the local and national health environment. PMGAA is confident that the Airport will experience a full recovery once the COVID-19 vaccines are more broadly distributed.

Operations Statistics

PASSENGER COUNTS		January		% Change	FYTD		% Change
		FY20	FY21		FY20	FY21	
Passengers	**TOTAL**	**151,362**	**80,675**	**-47%**	**957,013**	**611,350**	**-36%**
	Deplaned	78,351	40,670	-48%	488,987	313,547	-36%
	Enplaned	73,011	40,005	-45%	468,026	297,803	-36%
Allegiant	Scheduled	143,553	80,086	-44%	936,534	609,219	-35%
WestJet	Scheduled	1,874	0	-100%	5,478	0	-100%
Swoop	Scheduled	5,935	450	-92%	14,361	1,698	-88%
Elite/Swift	Charter	0	139	100%	640	433	-32%

OPERATIONS	January		% Change	FYTD		% Change
	FY20	FY21		FY20	FY21	
Air Carrier	1,163	872	-25%	7,276	6,344	-13%
Military	424	238	-44%	1,977	1,596	-19%
General Aviation	21,415	17,325	-19%	163,140	142,762	-12%
TOTAL	**23,002**	**18,435**	**-20%**	**172,393**	**150,702**	**-13%**

Engineering and Planning

There's a lot going on at Gateway Airport. Allegiant has announced four new nonstop destinations that will begin during the first half of 2021; private developers are in various stages of construction on approximately 500,000 sq. ft. of corporate headquarters, flex industrial buildings, and aircraft hangars; and a growing number of transient corporate jets and other large aircraft are choosing Gateway Airport when coming to greater Phoenix. This increase in aircraft activity is a welcome catalyst to help expedite the design and construction of Phase III, and potentially even Phase IV, of the Taxiway Alpha Apron Expansion Project. When completed, Phase III will provide Gateway Airport with around 300,000 sq. ft. and Phase IV an additional 260,000 sq. ft. of aircraft parking at the south end of the airfield.

Phase III & Phase IV - Taxiway Alpha Apron Expansion Project

Gateway Aviation Services

During the month of January 2021, Gateway Aviation Services, the PMGAA-operated Fixed Base Operator (FBO), pumped more than 1.3MM gallons of aviation fuel.

FUEL (Gallons)	January			FYTD		
	FY20	FY21	% Change	FY20	FY21	% Change
Retail (Jet A)	36,939	34,829	-6%	303,138	265,315	-12%
AvGas	67,578	40,139	-41%	417,388	376,005	-10%
Contract	379,526	296,043	-22%	2,425,405	2,681,189	11%
Commercial	1,359,986	995,758	-27%	7,782,222	7,225,426	-7%
TOTAL	**1,844,029**	**1,366,769**	**-26%**	**10,928,153**	**10,547,935**	**-3%**

Super Scooper in Action!

What type of aircraft is that?

Aviation enthusiasts and aircraft spotters just never know what interesting aircraft they'll see at Gateway Airport. For the past couple of months, the Super Scooper, a nickname given to the amphibious firefighting aircraft, conducted training at the Airport in preparation for the upcoming wildfire season. The unique aircraft is capable of landing on a body of water and scooping up 1,600 gallons of water.

Community Noise Report

CALLERS	January		FYTD	
	FY20	FY21	FY20	FY21
Total	27	32	94	88

AIRCRAFT TYPE	January		FYTD	
	FY20	FY21	FY20	FY21
	Callers	Callers	Callers	Callers
Commercial	22	10	71	35
GA Total	1	3	9	24
Helicopter	0	18	4	18
Military	4	1	10	11
Total	27	32	94	88

LOCATION	January		FYTD	
	FY20	FY21	FY20	FY21
Mesa	14	5	45	24
Gilbert	10	22	33	35
Gold Canyon	0	1	0	10
Queen Creek	2	3	9	11
Queen Valley	0	0	2	4
San Tan Valley	1	0	4	0
Apache Junction	0	0	1	0
Chandler	0	1	0	4
TOTAL	27	32	94	88

During the month of January 2021, PMGAA received aircraft noise calls from a total of 32 area residents. This compares to the 27 callers that contacted the Airport about aircraft noise in January 2020. However, unlike the previous year where noise calls were generated by commercial activity (22 of 27 total callers), this past January callers focused on the increased helicopter activity (18 of 32 total callers) as SRP transported Phoenix East Valley employees to temporary assignments on the west side of the Valley.

PMGAA, the Town of Gilbert, and others have worked closely with SRP to try to mitigate the noise impact of the helicopter flights by varying arrival and departure routes to/from the Airport.

Business Development

Private development projects completed and ready to lease at Gateway Airport!

1. **82,500 Sq. Ft. SkyBridge Arizona Hangar**
2. **53,000 Sq. Ft. SkyBridge Arizona Flex Industrial Building**
3. **50,000 Sq. Ft. Wetta Ventures Hangar**

A new 183,000 sq. ft. state-of-the-art, full-service hangar complex called **Gateway Executive Airpark** is in the process of finalizing its City of Mesa permitting process and hopes to be under construction by April 2021. Located between Textron Aviation's Mesa Service Center and Embraer's Executive Jet Service Center on the north end of Gateway Airport's expansive airfield, this exciting private development project includes both multi-tenant and freestanding private hangar opportunities with hangar door dimensions that will accommodate larger jets, including the new Gulfstream 700, or multiple smaller aircraft and helicopters.

Marketing and Community Relations

California Dreamin' - Nonstop San Diego!

Allegiant recently announced it will begin nonstop service between Gateway Airport and San Diego, CA on May 21, 2021. The four-times-a-week service to one of California's most popular beach cities will operate on Thursdays, Fridays, Sundays, and Mondays, and is currently scheduled to remain in Mesa throughout the summer. PMGAA is hopeful that high passenger demand to the Airport's "most requested destination" will convince Allegiant to keep the service at Gateway Airport year-round. Help spread the word! Please tell your family, friends, coworkers, and neighbors about Allegiant's new, non-stop service to San Diego.

On October 1, 2021 you'll need an Arizona Travel ID to get through the TSA Security Screening Checkpoint. The Arizona Travel ID is the credential that complies with the federal REAL ID Act. It is available as both a driver's license and identification card. There is a gold star embedded in the card to show that the cardholder has provided added proof of identification to ensure the license or ID meets strict federal requirements.

For more information, please visit https://azdot.gov/motor-vehicles/driver-services/arizona-travel-id.

MINUTES OF PUBLIC MEETING OF THE
PHOENIX-MESA GATEWAY AIRPORT AUTHORITY
BOARD OF DIRECTORS | January 19, 2021

A public meeting of the Phoenix-Mesa Gateway Airport Authority (PMGAA) was convened on Tuesday, January 19, 2021, beginning at 9:00 a.m. in the Board Room (Saguaro A&B) of the Gateway Administration Building, 5835 S Sossaman Road, Mesa, Arizona.

Members Present

Mayor Gail Barney, Queen Creek
Councilwoman Thelda Williams, Phoenix (*via videoconference*)
Mayor John Giles, Mesa (*via videoconference*)
Mayor Brigette Peterson, Gilbert (*via videoconference*)
Mayor Chip Wilson, Apache Junction
Lt. Governor Monica Antone, Gila River Indian Community (*via videoconference*)

** Neither present nor represented*

Airport Staff Present

J. Brian O'Neill, Executive Director/CEO
Scott Brownlee, Deputy Director/COO
Chuck Odom, CFO
Misty Johnson, Clerk of the Board
Jill Casson Owen, Attorney (*via videoconference*)

1. **Call to Order** at 9:01 a.m. (Mayor Barney)

2. **Roll Call.**

3. **Pledge of Allegiance.**

4. **Call to the Public.**
   There were no public comments.

5. **Executive Director's Report.** J. Brian O'Neill, A.A.E., Executive Director/CEO
   Executive Director O'Neill provided a briefing on PMGAA financial performance, passenger activity, the community noise report, and various Airport projects.
   - Three new PMGAA Board members were welcomed to their first meeting; Gilbert Mayor Brigette Peterson, Apache Junction Mayor Chip Wilson, and Gila River Indian Community Lt. Governor Monica Antone.
   - Fiscal Year-to-Date (FYTD) Net Operating Income is $1,642,324.
   - Commercial passenger statistics show Gateway Airport with a 22% decrease compared to October 2019, a 29% decrease compared to November 2019, and 32% decrease compared to FYTD20.
   - Total commercial passenger activity for Calendar-Year 2020 (CY20) is down 37%. Passenger related revenue has been negatively impacted by the COVID-19-related decrease in commercial passengers.
   - PMGAA is working on an update to its 2017 Strategic Business Plan. Department level tactical plans are being developed to meet the seven organizational goals identified by the PMGAA Board.
   - Allegiant service to Santa Maria, California began on November 19th. Allegiant's new nonstop service to Houston, Texas and Traverse City, Michigan will begin on February 11th and to Jackson Hole, Wyoming on June 2nd.

DRAFT

- PMGAA last conducted an Economic Impact Study in 2013. At that time, Gateway Airport contributed $1.3B to the local economy. PMGAA is embarking on a new Economic Impact Study in 2021. The study will focus on the economic contribution of the growing number of companies doing business on-airport, as well as the various expenditures from out-of-state visitors. There will also be a residency question to determine the number of residents from the surrounding communities who work on-airport.
- Through a partnership with the State of Arizona, free COVID-19 testing is now available to the public at the Ray Road Economy Parking Lot and available for ticketed passengers in the south courtyard of the commercial passenger terminal. Test results are typically available within 24-48 hours.
- SkyBridge Arizona is working with several potential tenants to occupy their 53,000 SF Flex Industrial Building.
- SkyBridge Arizona's 82,500 SF hangar is complete and already has one tenant.
- A groundbreaking was recently held for the new SkyBridge Arizona Hotel. This 127-room hotel will offer rooms for both transient overnight guests and extended stays customers. The hotel will offer two Wyndham Hotel brands (Hawthorne and Wingate).
- Aviation Performance Solutions (APS) works with pilots to teach upset recovery training. Their new 65,000 SF hangar/corporate headquarters will be complete in February.
- Wetta Ventures 50,000 SF hangar is complete, and they are working with multiple interested tenants.
- Gateway Executive Airpark's 187,000 SF hangar complex is currently going through permitting with the City of Mesa. Site work could begin on this exciting project in the February/March timeframe.
- Passenger response to the new upscale terminal concession brands - O.H.S.O. Brewery, The Saguaro Mercantile and Panera Bread - has been very positive. Macayo's Mexican Restaurant and the new Infusion Tea & Coffee are scheduled to be completed when passenger activity returns closer to pre-COVID-19 levels.
- The construction of the Air Traffic Control Tower continues to progress. In December, 37 eighty-foot deep caissons were installed. Later in January, a 6-foot thick mat foundation slab will be poured, and vertical steel construction can begin. A live Tower Cam is available to view construction of the tower in real time. https://www.gatewayairport.com/towerconstruction. The tower is scheduled to be operational in Summer of 2022.
- The relocation of the Ellsworth Channel and construction of the Hawes Road Bridge is complete.
- PMGAA is planning to expand its aircraft parking area along the south end of the airfield. Depending on interest from existing tenants, the project will include the build-out of Phase III or Phase III and Phase IV of the Alpha Apron.
- Design for the Taxiway Whiskey Reconstruction project is underway. This ADOT grant funded project will improve a section of pavement directly in front of the commercial passenger terminal.

6. Gateway*East* Video Presentation: – J. Brian O'Neill, A.A.E., Executive Director/CEO

PMGAA held a virtual promotional event designed to introduce the Gateway***East*** development opportunity to experienced large-scale developers on January 14th. Gateway***East*** is a 400-acre mixed use non-aeronautical master development opportunity located on the east side of the Airport. More than 550 people registered to participate in the event. A Request for Qualifications (RFQ) that will begin the selection process will be released on January 21st.

Councilwoman Williams praised the staff, Executive Director O'Neill, the PMGAA Board, Mayor Giles and Chris Brady for their hard work and dedicated commitment to moving Gateway Airport forward.

Mayor Giles echoed Councilwoman William's comments and added he is very optimistic about the Gateway***East*** development. Last week Executive Director O'Neill presented an update on the Airport to the Mesa City Council at the request of Mayor Giles. The presentation was well received, and Mayor Giles encouraged other communities to invite Executive Director O'Neill to come and present to their Councils as well.

Returning PMGAA Board member Lt. Governor Monica Antone from the Gila River Indian Community complimented Executive Director O'Neill and his team for their many accomplishments since she last served on the Board back in 2018. Lt. Governor Antone invited Executive Director O'Neill to Sacaton to update the Gila River Indian Community Council on the status of the Airport. She also commented that the financials look very stable considering the current economic environment. She requested an update on the Unified Cargo Processing (UCP) Program that was just getting underway at the time she left the Board. Executive Director O'Neill gave a brief update on the progress being made to establish the UCP Program.

Mayor Giles left the meeting at 9:35 a.m.

7. Consent Agenda.

a) Ratification of Consent Agenda of the Board Meeting held on **November 17, 2020.**

b) Minutes of the Board Meeting held on **November 17, 2020.**

c) Acceptance of audited financials as presented by **CliftonLarsonAllen, LLP** at November 17, 2020 Board Meeting.

d) Resolution No. 21-01 Authorizing a purchase with **Tyler Technologies, Inc.** for the Airport's Enterprise Resource Planning (ERP) financial system's annual software maintenance licensing renewals, in an amount not to exceed $53,505.03.

Mayor Chip Wilson moved to approve the Consent Agenda.
Mayor Brigette Peterson seconded the motion.
The motion was carried unanimously

8. Board Member Comments/Announcements.
Mayor Barney thanked the new PMGAA Board members for their willingness to participate and serve on the Board. He extended his appreciation for the time each board member commits to preparing and attending meetings.

9. Next Meeting: Tuesday, February 16, 2021 at 9:00 a.m. in the Board Room (Saguaro A&B) of the Gateway Administration Building, 5835 S Sossaman Road, Mesa, Arizona. Members of the Phoenix-Mesa Gateway Airport Authority may attend either in person or by telephone/videoconference.

10. Adjournment.
The meeting adjourned at 9:44 a.m.

Dated this _____ day of _____ 2021.

_____
Misty Johnson, Clerk of the Board

Phoenix-Mesa Gateway Airport Authority
5835 S Sossaman Road
Mesa, Arizona 85212-6014
www.gatewayairport.com

Board Action Item

Re: Resolution 21-02

To:	**Board of Directors**
From:	**R. J. Draper, P.E., LEED AP, CM Engineering & Facilities Director**
Through:	**Scott Brownlee, Deputy Director/COO**
	J. Brian O'Neill, A.A.E., Executive Director/CEO
Subject:	**Passenger Channelization Barrier Project – CIP 1212**
Date:	**March 16, 2021**

Proposed Motion
To authorize the purchase of materials and the installation of the structures to provide Passenger Channelization to and from the Terminal in an amount not to exceed $62,950 under CIP 1212.

Narrative
Passengers enplaning and deplaning through the Passenger Terminal Complex do not utilize "Jet-Bridges"; instead they are escorted to and from each aircraft, by the air carriers, across the aircraft apron and up and down the ADA compliant boarding ramps. Because there are many simultaneous and immediately adjacent passenger enplaning and deplaning operations, the passengers must be separated and directed, or "channelized". We currently have an array of tools that are used to channelize the passengers, all of which have benefits and detractors. The most significant area of concern are the pedestrian bicycle barriers as they present a trip and fall hazard.

PMGAA has developed a solution that will resolve the current channelization of passengers by installing concrete barriers that guide the passengers safely and efficiently. These barriers comply with applicable regulations including emergency access.

An Invitation for Bid (IFB), Solicitation 2021-018-IFB was issued on January 12, 2021 and advertised in the Arizona Business Gazette on 1/14/21 and 1/21/21; the Notice of IFB was also posted on the Phoenix-Mesa Gateway Airport Authority Website and the Arizona Airports Association's website. In addition, the IFB was emailed to a list of four prospective firms. The Bid opening was held on January 26, 2021 and two (2) bids were received.

COMPANY	BID AMOUNT
Howe Precast Concrete Barriers, Inc.	**$ 62,949.38**
Hawk Contracting LLC	$123,380.78

Fiscal Impact
This is a project under CIP1212 utilizing airport funds.

Attachment(s)
Bid

RESOLUTION NO. 21-02

WHEREAS, the Phoenix-Mesa Gateway Airport Authority ("Authority"), a joint powers airport authority formed pursuant to Arizona Revised Statute §28-8521 *et seq.* owns and operates the Phoenix-Mesa Gateway Airport ("Airport"); and

WHEREAS the Authority desires to authorize the purchase of materials and the installation of the structures to provide Passenger Channelization to and from the Terminal in an amount not to exceed $62,950 under CIP 1212;

NOW, THEREFORE, BE IT RESOLVED by the Board of Directors of the Authority as follows:

> **The Board of Directors of the Authority hereby approves the purchase of materials and the installation of the structures to provide Passenger Channelization to and from the Terminal in an amount not to exceed $62,950 under CIP 1212. This resolution also authorizes the Chair or Executive Director/CEO to make such purchase, with such insertions, deletions, and changes as may be approved by the Chair or Executive Director/CEO, necessary to carry out the purposes and intent of this Resolution.**

Passed and adopted by the Authority this 16th day of March, 2021.

Gail Barney, Chair

ATTEST:

Misty Johnson, Clerk of the Board

APPROVED AS TO FORM:

Jill Casson Owen, Attorney

Phoenix-Mesa Gateway Airport

INVITATION FOR BID
SOLICITATION #2021-018-IFB
PASSENGER CHANNELIZATION PROJECT

SUBMITTAL COVER SHEET

Name of Offeror: Howe Precast Concrete Barrier, INC.

EIN#: 46-0607407

DUNS#: 9434944625

Principal Address: P.O. Box 1249
Queen Creek AZ 85142

Primary Point of Contact: Candice Hunter

Phone: 480-988-2073

Email: chunter@howeprecast.com

The undersigned hereby affirms that:

- The undersigned is a duly authorized agent of the Offeror
- The undersigned has read and understands all terms, conditions and commitments contained within the IFB and any addenda issued and fully understands and accepts these terms by submission of a bid.
- The submission is being offered independently of any other Offeror and did not involve collusion or other anti-competitive practices.

By: _____ Signature

1/21/2021 Date

Candice Hunter Printed Name

Office Manager Title

Phoenix-Mesa Gateway Airport

Attachment A
Offeror's Bid

Offeror will complete the work in accordance with the IFB documents for the following price(s):

OFFEROR'S NAME: Howe Precast Concrete Barrier Inc.

PASSENGER CHANNELIZATION PROJECT - BID						
LINE NO.	ITEM NO.	DESCRIPTION	APPROX. QTY.	UNIT	UNIT* PRICE	AMOUNT
1	-	ADOT approved highway barriers 12.5'L x 24"W x 32"T **Delivered and placed** per plan (Exhibit 1).	93	EA	625	58,125.00
2		**SUBTOTAL AMOUNT OF BID, INCLUSIVE**			$ 58125.00	
3		Applicable Sales Tax - As the work described within this Invitation For Bids takes place in the State of Arizona, the County of Maricopa and the City of Mesa, the applicable sales tax rate is:			8.3%	
4		Applicable Sales Tax (Line 2 x Line 3)			$ 4824.38	
5		**TOTAL AMOUNT OF BID (LINE 2 + LINE 4)**			$ 62,949.38	

Sixty two thousand nine hundred forty nine ~~[illegible]~~ eight cents **100 Dollars**
Bid Amount Written in Words

**All Unit Prices shall be exclusive of any and all sales taxes.*

Estimated Delivery Time Once Notice to Proceed is Issued: 4 weeks

Phoenix-Mesa Gateway Airport

Attachment B
Standard Certifications

Complete Attachment B by checking the applicable box(s) and/or providing responses.
Failure to complete this Attachment B in its entirety and submit with Offeror's Bid will result in Offeror's submittal being deemed nonresponsive and not evaluated.

If Offeror cannot affirmatively certify to statement numbers 1 and 2 below, Offeror's Bid will be rejected and will not be evaluated.

1. Offeror hereby ☑ certifies ☐ does not certify
That this engagement, if selected, will not result in a conflict of interest.

2. Offeror hereby ☑ certifies ☐ does not certify
That the barriers submitted for consideration by PMGAA under this solicitation 2021-018-IFB, meets all specifications and requirements listed in this IFB.

If Offeror cannot affirmatively certify to statement number 3 below, PMGAA will consider Offeror's written response to determine if it's Bid will be accepted and be evaluated.

3. Offeror hereby ☑ certifies ☐ does not certify
That it has no known business or financial relationships between Offeror or Offeror's firm and members of the PMGAA Board.

If Offeror does have known business or financial relationships, please list them below:

_____

_____

_____

_____

_____

By signature below, Offeror certifies that the information in this Attachment is true, and accurate.

Signature: [signature] Date: 1/21/2021

Printed Name: Candice Hunter Title: Office Manager

Phoenix-Mesa Gateway Airport

Attachment C
Offer Agreement

OFFER TO PHOENIX-MESA GATEWAY AIRPORT AUTHORITY:

The Offeror hereby certifies and agrees to furnish the material and/or service offered in compliance with all terms, conditions, specifications, and amendments in the Invitation for Bid.

In submitting this Bid, Offeror represents that:

A. Offeror has examined and carefully studied all information contained in the IFB and any Addenda issued by PMGAA.

B. Offeror is familiar with and is satisfied as to the general, local and Site conditions that may affect cost, progress, and performance of the work.

C. Offeror is familiar with and is satisfied as to all federal, state and local Laws and Regulations that may affect cost, progress and performance of the work.

G. Offeror is aware of the general nature of work to be performed by PMGAA and others at the Site that relates to the Work as indicated in the IFB Document.

I. Offeror has given PMGAA written notice of all conflicts, errors, ambiguities, or discrepancies that Offeror has discovered in the IFB Document, and the written resolution thereof by PMGAA is acceptable to Offeror.

J. The Bidding Documents are generally sufficient to indicate and convey understanding of all terms and conditions for the performance of the Work for which this bid is submitted.

Company Name: Howe Precast Concrete Barrier Inc.

Signature

11/21/2021
Date

Candice Hunter
Printed Name

Office Manager
Title

Phoenix-Mesa Gateway Airport

Attachment D

Insurance Requirements & Certificate of Insurability

During the term of this Contract, Offeror shall maintain in full force at its own expense, each insurance noted below normally associated with the services covered by this Contract:

GENERAL LIABILITY ☒ Required by PMGAA ☐ Not required by PMGAA

General liability insurance with limits no less than **$1,000,000** per occurrence and **$1,000,000** general aggregate for Bodily Injury and Property Damage. It shall include contractual liability coverage for the indemnity provided under this Contract. Any supplementary payments, including defense costs, shall be in addition to the policy limits. It shall provide that the Phoenix-Mesa Gateway Airport Authority, its agents, officials, officers and employees are Additional Insureds but only with respect to the Offeror's services to be provided under this Contract.

AUTOMOBILE LIABILITY ☒ Required by PMGAA ☐ Not required by PMGAA

Automobile liability insurance with a combined single limit, or the equivalent, of not less than
☐ **$200,000** ☐ **$500,000** ☒ **$1,000,000** ☐ **$5,000,000**
for each accident for Bodily Injury and Property Damage, including coverage for owned, hired or non-owned vehicles, as applicable. Proof of coverage is required. All vehicles used by Offeror on PMGAA property shall carry appropriate proof of insurance.

PROFESSIONAL LIABILITY ☐ Required by PMGAA ☒ Not required by PMGAA

Professional liability insurance with limits no less than **$1,000,000** for each claim, incident or occurrence and **$2,000,000** general aggregate. This is to cover damages caused by error, omission or negligent acts related to the professional services to be provided under this Contract. Only a certificate is required.

WORKERS' COMPENSATION. ☒ Required by PMGAA

The Offeror shall maintain Workers' Compensation insurance with statutory limits as required by the State of Arizona and Employer's Liability insurance in the amount of *One Million Dollars ($1,000,000)*. The policy shall contain a waiver of subrogation in favor of the PMGAA.

POLLUTION LEGAL LIABILITY ☐ Required by PMGAA ☒ Not required by PMGAA

Pollution Legal Liability insurance with a combined single limit, or the equivalent, of not less than
☐ **$200,000** ☐ **$500,000** ☐ **$1,000,000** ☐ **$2,000,000**
for each event. A certificate is required.

CERTIFICATES OF INSURANCE AND ENDORSEMENTS.

Check one or both if insurance is required: ☒ Certificate Required
☒ Endorsement Required

As evidence of the insurance coverages required by this IFB/Contract, the Offeror shall furnish acceptable insurance certificates and endorsements to PMGAA prior to commencement of any work under this Contract. For work performed under this Contract, the insuring company's certificates and endorsements shall be endorsed to include the following additional insured language: "The Phoenix-Mesa Gateway Airport Authority shall be named as an additional insured with respect to liability arising out of the activities performed by, or on behalf of Offeror." If requested, complete copies of insurance policies, trust agreements, etc. shall be provided to the PMGAA. The Offeror shall be financially responsible for all pertinent deductibles, self-insured retentions and/or self-insurance.

NOTICE OF CANCELLATION OR CHANGE.

There shall be no cancellation, material change, reduction of limits or intent not to renew the insurance coverage(s) without thirty (30) days' written notice from the Offeror or its insurer(s) to PMGAA.

Phoenix-Mesa Gateway Airport

Offeror hereby certifies that as an Offeror for this project, Offeror is fully aware of the insurance requirements for the Offeror and that by submitting this bid proposal, assures PMGAA that Offeror is able to produce the required minimum insurance coverage should Offeror be selected to be the successful bidder.

Should Offeror be selected to be the successful bidder and then become unable to produce the insurance coverage prior to the award of the project, Offeror understands that its bid will be rejected, and that Offeror will forfeit its bid bond.

Signature of Offeror

1/21/2021
Date

Office Manager
Title

Phoenix-Mesa Gateway Airport

Attachment E
Offeror's Identification Statement

If Offeror is:

An Individual

Name (typed or printed): _____

By: _____ (SEAL)
(Individual's signature)

Doing business as: _____

Business address: _____

Phone No.: _____ Facsimile No.: _____

A Partnership

Partnership Name: _____ (SEAL)

By: _____
(Signature of general partner -- attach evidence of authority to sign)

Name (typed or printed): _____

Business address: _____

Phone No.: _____ Facsimile No.: _____

A Corporation

Corporation Name: Have Precast Concrete Barrier Inc. (SEAL)

State of Incorporation: Arizona

Type (General Business, Professional, Service, Limited Liability): _____

By: _____
(Signature -- attach evidence of authority to sign)

Name (typed or printed): Justin Franks

Title: President

Attest: _____
(Signature of Corporate Secretary)

Business address: _____

Phone No.: 480-988-2073 Facsimile No.: 480-988-0047

Date of Qualification to do business is 3/29/2005.

Phoenix-Mesa Gateway Airport

Attachment F
Addenda Acknowledgement

Offeror is responsible for obtaining all addenda, if issued, via the PMGAA website at www.gatewayairport.com under the Business | Procurements, Vendors & Public Notices section or by other means (see Section One, Subsection A, paragraph 2, Addenda).

Failure to acknowledge, and include this form in Offeror's submittal, may cause Offeror's Bid to be deemed nonresponsive. If no addenda were issued, Offeror does not need to include this attachment in its Bid.

Offeror hereby acknowledges receipt of the following addenda issued by PMGAA for solicitation 2021-018-IFB (fill in Addendum Number and Date Issued).

Addendum No. _____ Date Issued: _____

Addendum No. _____ Date Issued: _____

Addendum No. _____ Date Issued: _____

Addendum No. _____ Date Issued: _____

Addendum No. _____ Date Issued: _____

By: _____
Signature

Candace Hunter
Printed Name

1/21/2021
Date

Office Manager
Title

Phoenix-Mesa Gateway Airport Authority
5835 S Sossaman Road
Mesa, Arizona 85212-6014
www.gatewayairport.com

Board Action Item

Re: Resolution 21-03

To:	**Board of Directors**
From:	**Brian Lehrich, MAcc, CPA, Accounting Director**
Through:	**Chuck Odom, Chief Financial Officer**
	J. Brian O'Neill, A.A.E., Executive Director/CEO
Subject:	**Authorizing Applications and Acceptance of Grants**
Date:	**March 16, 2021**

Proposed Motion

To authorize the filing of grant applications including agreeing to all understandings and assurances contained therein; and, authorizing the acceptance and execution of any Federal Aviation Administration (FAA) or other Federal agency, State of Arizona, Arizona County or Arizona Local Municipal grant offer(s), applied for or received between July 1, 2021 and June 30, 2022 by the Chair of the Authority, the Executive Director/CEO, Deputy Director/COO or Chief Financial Officer/CFO.

Narrative

The FAA and Arizona Department of Transportation received the Phoenix-Mesa Gateway Airport Authority (PMGAA) Airport Capital Improvement Program (fiscal years 2021-2025 and preceding years) in accordance with the Airport Master Plan. The Federal Government, State of Arizona, Arizona Counties or Arizona Local Municipalities may offer PMGAA a grant or multiple grants for capital improvements or other projects at any time during the year that will support the priorities of the PMGAA.

Staff requests authority to prepare grant applications and submit for capital planning, design, construction or other projects that will support the priorities of the PMGAA. PMGAA further requests authority to accept offer(s) received, agree to accomplish the described development or scope, and comply with the terms and conditions of the grant agreement(s), including maintaining compliance with the assurances made as part of the project application(s).

Fiscal Impact

Grants from the agencies make the Capital Improvement Program at the Airport financially feasible and leverage funding.

Attachment(s)

N/A

RESOLUTION NO. 21-03

WHEREAS, the Phoenix-Mesa Gateway Airport Authority ("Authority"), a joint powers airport authority formed pursuant to Arizona Revised Statute §28-8521 *et seq.* owns and operates the Phoenix-Mesa Gateway Airport ("Airport"); and

WHEREAS the Authority desires to authorize the filing of grant applications including agreeing to all understandings and assurances contained therein; and, authorizing the acceptance and execution of any Federal Aviation Administration (FAA) or other Federal agency, State of Arizona, Arizona County or Arizona Local Municipal grant offer(s), applied for or received between July 1, 2021 and June 30, 2022 by the Chair of the Authority, the Executive Director/CEO, Deputy Director/COO or Chief Financial Officer/CFO.

NOW, THEREFORE, BE IT RESOLVED by the Board of Directors of the Authority as follows:

> **The Board of Directors of the Authority hereby authorizes the filing of grant applications including agreeing to all understandings and assurances contained therein; and, authorizing the acceptance and execution of any Federal Aviation Administration (FAA) or other Federal agency, State of Arizona, Arizona County or Arizona Local Municipal grant offer(s), applied for or received between July 1, 2021 and June 30, 2022 by the Chair of the Authority, the Executive Director /CEO, Deputy Director/COO or Chief Financial Officer/CFO. This resolution also authorizes the Chair or Executive Director/CEO to execute such grants, applications and agreements, with such insertions, deletions, and changes as may be approved by the Chair or Executive Director/CEO, necessary to carry out the purposes and intent of this Resolution.**

Passed and adopted by the Authority this 16th day of March, 2021.

Gail Barney, Chair

ATTEST:

Misty Johnson, Clerk of the Board

APPROVED AS TO FORM:

Jill Casson Owen, Attorney

Phoenix-Mesa Gateway Airport Authority
5835 S Sossaman Road
Mesa, Arizona 85212-6014
www.gatewayairport.com

Board Action Item

Re: Resolution 21-04

To:	**Board of Directors**
From:	**Margi EvanSon, Operations & Maintenance Director**
Through:	**Scott Brownlee, Deputy Director/COO**
	J. Brian O'Neill, A.A.E., Executive Director/CEO
Subject:	**Asphalt runway repairs of 12C/30C**
Date:	**March 16, 2021**

Proposed Motion
To authorize the purchase of airfield asphalt repair services with Ace Asphalt of Arizona, Inc. for an amount not to exceed $121,396.24.

Narrative
Due to use and age, the condition of the asphalt on Runway 12C/30C requires crack-fill and seal coating. The shoulders of 12C/30C require crack-fill to reduce further deterioration.

The recommended course of action includes runway crack-fill and seal coat and shoulder crack-fill on Runway 12C/30C. Authorization of the purchase for airfield asphalt repair services is necessary to reduce FOD, repair deterioration and extend life cycles.

PMGAA and Ace Asphalt are both participants of the Mohave Educational Service Cooperative (MESC) Purchasing Group. Under MESC, Ace Asphalt was awarded Contract #19-ACE-0318 for asphalt products and services, and it is through this competitive selection that PMGAA will utilize Ace Asphalt for asphalt services. This contract is available upon request.

Three separate quotes were obtained utilizing the MESC pricing as noted below:

Runway 12C/30C Seal	Proposal #365122-76562:	$ 61,111.46
Runway 12C/30C Crack-Fill	Proposal #365061-76434:	$ 46,036.33
Shoulder 12C/30C Crack-Fill	Proposal #365062-76437:	$ 14,248.45
	Total:	$121,396.24

Fiscal Impact
The maintenance expenses were included in the FY21 operating budget under Repair and Maintenance: Pavements.

Attachment(s) Proposals

RESOLUTION NO. 21-04

WHEREAS, the Phoenix-Mesa Gateway Airport Authority ("Authority"), a joint powers airport authority formed pursuant to Arizona Revised Statute §28-8521 *et seq.* owns and operates the Phoenix-Mesa Gateway Airport ("Airport"); and

WHEREAS the Authority desires to authorize the purchase of airfield asphalt repair services with Ace Asphalt of Arizona, Inc. for an amount not to exceed $121,396.24;

NOW, THEREFORE, BE IT RESOLVED by the Board of Directors of the Authority as follows:

> **The Board of Directors of the Authority hereby authorizes the purchase of airfield asphalt repair services with Ace Asphalt of Arizona, Inc. for an amount not to exceed $121,396.24. This resolution also authorizes the Chair or Executive Director/CEO to take such additional actions as necessary carry out the purposes and intent of this Resolution.**

Passed and adopted by the Authority this 16th day of March, 2021.

_____
Gail Barney, Chair

ATTEST:

_____
Misty Johnson, Clerk of the Board

APPROVED AS TO FORM:

_____
Jill Casson Owen, Attorney

We're on it.

Arizona | California | Colorado | Nevada | New Mexico | Texas

February 11, 2021

SUBMITTED TO:
Phoenix Mesa Gateway Airport
Brett Williams

480-988-7520
6263 S Taxiway Cir
Mesa, AZ 85212

WORK TO BE PERFORMED AT:
Phx Mesa GW RW Shoulders 12-30C Poly Patch 02-11-2020
5835 South Sossaman Road
Mesa, AZ 85212

SUBMITTED BY:
Tad Peters
Account Executive

P: 602-320-6366
F:
E: peterst@aceasphalt.com

3030 South 7th St
Phoenix, AZ 85040

MOHAVE EDUCATIONAL SERVICE CO-OP BID

CONTRACT NUMBER: 19P-ACE-0318
SPECIAL NOTE:
The terms and conditions of Mohave Educational Services Co-Op Bid, Contract Number 19P-ACE-0318 will prevail over any and all terms and conditions stated in the proposal.
Prices are valid until March 31st, 2021.

SCOPE OF WORK

CRACK SEALING

Major cracks (1/4-inch and wider) will be caulked with a hot-applied, rubberized crack sealer, excluding areas with alligator cracking.

NOTE:
This work will be done in 2 mobilizations. Work performed on weekends may incur additional charges.

This is for shoulders only on RW 12-30C. Includes up to 150 gallons of crack fill and 350 gallons of mastic for wide cracks.

Work areas must be clear of obstructions, If it is necessary to move vehicles from work areas, Ace Asphalt will tow vehicles and relocate to a designated area to be recovered by owners. Towing charges will be billed at a rate of $65.00 per vehicle.

OUR COMMITMENT TO THE ENVIRONMENT:
Ace believes in employing sustainable practices that are both socially responsible and commercially sound. From material recycling strategies to pollution prevention initiatives, we are committed to minimizing our environmental impact while improving the well being of the communities we serve.

At Ace Asphalt, we don't just build surfaces. We build trust. And we look forward to building yours.

PRICING

PHASES	
Crack Sealing	$13,519.10
SUBTOTAL	$13,519.10
Estimated Tax	$729.35
PROPOSAL TOTAL	**$14,248.45**

EXCLUSIONS, UNLESS NOTED ABOVE:
Bonds, testing, engineering, permits, taxes, soil sterilant, caulking/grouting, wire or fiber mesh, dowels, colored concrete, decorative finishes, utility adjustments, or landscaping/landscape irrigation repairs; Correction of drainage issues or pre-existing subgrade deficiencies; Crack seal adjacent to concrete sidewalks and curbing; Single coat sealing applications and cracks over 2" in width are excluded from warranty (per manufacturer specifications); Work performed on weekends may incur an additional charge.

NOTE: According to Arizona Law, any purchase order issued with an aggregate total over $100,000.00 will need to have a payment and performance bond issued for 100% of the work performed. For additional information, please contact Mike Jensen at 602-304-4023.
NOTE: When you decide to accept this proposal, please make your PO out directly to Ace Asphalt of Arizona, Inc., then fax your PO to Mohave Educational Services, Inc. at 928-718-3232 for verification of pricing and to Ace Asphalt at 602-304-2725. The Mohave contract number: 19P-ACE-0318, must appear on your PO. Once Mohave approves the PO for compliance, they will notify Ace Asphalt to proceed with the Work.
Sales Tax may vary based upon completion time of the project and any tax rate changes made by the state, city or county regulations.
TERMS: NET 30 DAYS AFTER COMPLETION OF WORK.
ACCEPTANCE: Ace Asphalt of Arizona, Inc., is authorized to proceed with the work as specified. Payment will be made according to the terms listed above.

Authorized Signature	Title
Print Name	Date
Legal Property Owner Name	Invoice Addressee
Scheduling Contact	Invoice Mailing Address

TERMS AND CONDITIONS

General Conditions

All surfaces to which material is to be applied shall be in a condition that is similar to the time at which the project was bid. Customer shall notify Ace in advance when the site will be ready for the work to be performed, and shall give free and unobstructed access so that the work to be performed hereunder can be commenced promptly, and that once begun, may be completed without delay. Customer agrees to pay Ace its reasonable charges for delays caused by Customer. Towing of vehicles, if necessary, shall be the responsibility of Customer.

Ace Asphalt is not responsible for making any site conditions or improvements ADA compliant unless directed by the customer to do so. If directed by the Customer, Ace Asphalt will make the recommended changes and additional charges may apply. Ace Asphalt also recommends the use of a certified ADA consultant for site evaluations and recommendations as required by Federal and State laws.

Customer is solely responsible for maintaining its properties in full compliance with the ADA and agrees to indemnify and hold Ace Asphalt harmless from and against any and all liability, claims, damages or expense, including attorneys fees, relating in any way to ADA requirements or issues.

Traffic control will be provided by Ace unless otherwise specified. It shall become the responsibility of Customer to maintain barricades and/or closures if required after Ace's personnel leave the site.

A water supply source shall be furnished by Customer for Ace's use on this project.

Ace does not assume responsibility for any utility lines such as water, electric, sprinkler, etc., which may lie within eighteen inches (18") of the surface. Layouts of locations must be furnished to Ace if such lines are known to exist. Failure to furnish information in this regard will cause Customer to carry responsibility in case of any damage and repairs to such lines.

Customer shall be represented by one spokesperson, who shall have the authority to accept work performed, authorize and sign for any additions or changes desired, and will be available for consultation with Ace's representative.

Customer grants permission to Ace to create photos or videos of the site for use in promotion of its business services.

Taxes are computed for the locality in which the work is performed at the time the project is invoiced. Taxes can be waived, by law, only upon receipt of an exemption certificate that has been properly executed by responsible party to this contract.

Ace reserves the right to submit progress billings to Customer on a weekly, bi-weekly, or monthly basis. Customer agrees to pay progress billings in accordance to our terms and conditions.

Indemnification

Ace maintains adequate insurances and shall indemnify and hold harmless Customer, Owner, and agents and employees of any of them from any claims, damages, losses and expenses arising out of or resulting from performance of the Work to the extent caused by the negligent acts or omissions of Ace or anyone for whose acts Ace may be liable.

Warranty

The work proposed herein is covered by a 30 month warranty on workmanship. Normal wear and tear, abuse, accidental damage, and acts of God are excluded.

Disputes

If Customer objects to any portion of the work, Customer will so notify Ace within seven (7) calendar days, identify the cause of disagreement, and pay when due that portion of the invoice not in dispute. The parties will immediately make every effort to settle the disputed portion of the invoice.

The parties hereby agree that, in any legal action arising from this Agreement, venue for the action may properly be placed in the county of the Ace office that issued this contract. The parties acknowledge that they are hereby voluntarily and knowingly relinquishing and waiving any rights they may have to establishing venue in any other county. This Agreement shall be in accordance with and governed by the laws of the state of Arizona. If

a court finds that any provision of this Agreement is not valid or should not be enforced, that fact by itself will not mean that the rest of this Agreement will not be valid or enforced. Therefore, a court may enforce the rest of the provisions of this Agreement even if a provision of this Agreement may be found to be invalid or unenforceable.

Our Commitment to the Environment

Ace believes in employing sustainable practices that are both socially responsible and commercially sound. From material recycling strategies to pollution prevention initiatives, we are committed to minimizing our environmental impact while improving the well being of the communities we serve.

Confidentiality

The information in this document is privileged and confidential. No part of this document may be reproduced and/or distributed to anyone other than the recipient listed on this document without written permission from Ace.

Ace Asphalt of Arizona, Inc. 19P-ACE-0310
Mohave Contract Pricing
PRICING EFFECTIVE: 1/1/2021 - 3/31/2021

DATE: Feb 11,2021
ACCOUNT NAME: Phoenix Mesa Gateway Airport
SITE NAME: RW 12-30C Shoulders
PROPOSAL #: 365002 - 76437

NOTICE: THIS PROPOSAL CONTAINS PROPRIETARY AND CONFIDENTIAL INFORMATION OF ACE ASPHALT OF ARIZONA NC AND SHALL NOT BE USED, DISCLOSED OR REPRODUCED, IN WHOLE OR IN PART, FOR ANY PURPOSE OTHER THAN TO EVALUATE THIS PROPOSAL, WITHOUT THE PRIOR WRITTEN CONSENT OF AN OFFICER OF ACE ASPHALT OF ARIZONA INC.. TITLE IN AND TO THIS DOCUMENT (OR FILE, IF ELECTRONICALLY SUBMITTED) AND ALL INFORMATION CONTAINED HEREIN REMAINS AT ALL TIMES IN ACE ASPHALT OF ARIZONA INC.

Pricing Zone	Apply PAP Bond?
1A	NO

SERVICE CATEGORY	WORK ITEM	NOTES	UNITS	QTY	PRICE	MOHAVE ZONE COEFFICIENT	EXTENDED PRICE	VERIFIED?
HOT_RUBBER_CRACKFILL	Mobilization Charge		PER	2	$ 405.000	1.000	$ 810.00	Yes!
HOT_RUBBER_CRACKFILL	Charge per Gallon used		PER	150	$ 15.166	1.000	$ 2,274.90	Yes!
HOT_RUBBER_CRACKFILL_CRACK_MASTIC	Charge per Gallon used (75 Gallons Minimum Charge)		PER	350	$ 26.500	1.000	$ 9,275.00	Yes!
OTHER_RATES	Labor and equipment rate, $ per man hour		PER	12	$ 96.605	1.000	$ 1,159.20	Yes!
							$ -	
						SUBTOTAL	$ 13,519.10	
					Payment & Performance Bond	1.3%	$ -	
						TOTAL DUE	$ 13,519.10	

Phoenix Mesa Gateway Airport
Runway 12-30C Shoulder Large Crack Repair
Contact: Greg Batin
Scope: Crack repair including up to 150 gallons of standard crack repair and 350 gallons of Mastic.
Daytime work, Closure by owner
Start on North Side, work west to east.
ACE ASPHALT
© 2020 Google
Google Ea

Phoenix-Mesa Gateway Airport Authority
5835 S Sossaman Road
Mesa, Arizona 85212-6014
www.gatewayairport.com

Board Action Item

Re: Resolution 21-05

To: Board of Directors
From: Shea Joachim, CEcD, Business Development Director
Through: J. Brian O'Neill, A.A.E., Executive Director/CEO
Subject: Mesa SkyBridge, LLC – Master Lease Adjustment Amendment #6
Date: March 16, 2021

Proposed Motion
To authorize an Adjustment Amendment to the Master Lease Agreement with Mesa SkyBridge, LLC for the property located at the southeast corner of Sossaman Road and Velocity Way.

Narrative
The Phoenix-Mesa Gateway Airport Authority ("PMGAA") and Mesa SkyBridge, LLC ("SkyBridge") entered into a Master Lease Agreement on April 1, 2018 for the approximately 360-acres located at the southeast corner of Sossaman Road and Velocity Way ("Property").

Staff proposes an Adjustment Amendment to the Master Lease Agreement ("Agreement") to remove the West Retention Basin from the Property. After the removal of the West Retention Basin the Rentable Premises, as defined in Section 5.9 of the Agreement, is 14,590,709 SF.

There are no other changes to the terms of the Master Lease Agreement.

Attachment(s)
Master Lease Adjustment Amendment #6

RESOLUTION NO. 21-05

WHEREAS, the Phoenix-Mesa Gateway Airport Authority ("Authority"), a joint powers airport authority formed pursuant to Arizona Revised Statute §28-8521 *et seq.* owns and operates the Phoenix-Mesa Gateway Airport ("Airport"); and

WHEREAS the Authority desires to authorize an Adjustment Amendment to the Master Lease Agreement with Mesa SkyBridge, LLC for the property located at the southeast corner of Sossaman Road and Velocity Way;

NOW, THEREFORE, BE IT RESOLVED by the Board of Directors of the Authority as follows:

> **The Board of Directors of the Authority hereby authorizes an Adjustment Amendment to the Master Lease Agreement with Mesa SkyBridge, LLC for the property located at the southeast corner of Sossaman Road and Velocity Way. This resolution also authorizes the Chair or Executive Director/CEO to execute such Agreement, with such insertions, deletions, and changes as may be approved by the Chair or Executive Director/CEO, necessary to carry out the purposes and intent of this Resolution.**

Passed and adopted by the Authority this 16th day of March, 2021.

Gail Barney, Chair

ATTEST:

Misty Johnson, Clerk of the Board

APPROVED AS TO FORM:

Jill Casson Owen, Attorney

ADJUSTMENT AMENDMENT TO MASTER LEASE

Remove West Retention Basin

THIS ADJUSTMENT AMENDMENT TO MASTER LEASE ("**Amendment**") is made as of the 1st day of April, 2021, by and between **PHOENIX-MESA GATEWAY AIRPORT AUTHORITY**, a joint powers airport authority authorized and existing under the laws of the State of Arizona ("**Lessor**"), and **MESA SKYBRIDGE LLC**, an Arizona limited liability company ("**Lessee**"). Lessor and Lessee may be referred to jointly as "Parties," and each separately may be referred to as a "Party."

RECITALS

A. Lessor and Lessee are parties to that certain Master Lease dated April 1, 2018, as amended by that certain First Amendment to Master Lease dated August 1, 2018, and that certain Second Amendment to Master Lease dated August 1, 2019, and that certain Adjustment Amendment to Master Lease dated November 1, 2019, that certain Adjustment Amendment to Master Lease dated December 1, 2019, and that certain Adjustment Amendment to Master Lease dated May 1, 2020 (collectively, the "**Lease**") covering certain property commonly known as Gateway Aerospace Park at the Phoenix-Mesa Gateway Airport, which property is more particularly described in the Lease, and referred to in the Lease and in this Amendment as "**Property**."

B. A portion of the Property includes the "West Retention Basin" as depicted and described on Exhibit A attached hereto, comprising approximately 445,266 SF.

C. The Parties desire to modify the Lease to remove the West Retention Basin from the Property.

NOW, THEREFORE, in exchange for the mutual covenants and promises contained herein and for other valuable consideration, the receipt and sufficiency of which are hereby acknowledged, Lessor and Lessee agree as follows:

1. Recitals. The above recitals are hereby confirmed as true and correct and are reaffirmed herein.

2. Property Adjustment. The West Retention Basin, as described in Exhibit A attached hereto, is hereby removed from the Lease and the Rentable Premises. As of the date of this Amendment, after removing the West Retention Basin from the Lease, the Rentable Premises is 14,590,709 SF.

3. Amendment to Declaration. Lessee shall amend the Declaration of Covenants, Conditions And Restrictions for Skybridge Arizona ("**Declaration**") to remove the West Retention Basin from the property encumbered by the Declaration by recording a Declaration of De-Annexation in accordance with Sectn 6.2 of the Declaration ("**Declaration De-Annexation**"). The Parties agree that the Declaration De-Annexation shall solely consist of modifying the legal description set forth in Exhibit A of the Declaration, to remove the West Retention Basin from the Project (as such term is defined in the Declaration). Prior to recording, Lessee shall obtain Lessor's approval of the Declaration De-Annexation. Lessee shall record the Declaration De-Annexation on or before June 30, 2021.

4. Miscellaneous.

(a) Capitalized Terms/Definitions. Each capitalized term used in this Amendment and not defined herein shall be deemed to have the same meaning ascribed to it in the Lease.

(b) Continuing Effect. Except as specifically provided in this Amendment, the provisions of the Lease shall remain unchanged and in full force and effect. In the event of a conflict between the Lease and this Amendment, this Amendment shall control.

(c) Authority. Each person executing this Amendment on behalf of a Party represents and warrants that it has the full power, authority, and legal right to execute and deliver this Amendment on behalf of such Party and that this Amendment constitutes the legal, valid and binding obligations of such Party, its heirs, representatives, successors and assigns, enforceable against such Party or Parties in accordance with its terms.

(d) Counterparts. To facilitate execution of this Amendment, this Amendment may be executed in one or more counterparts as may be convenient or required, and an executed copy of this Amendment delivered electronically by e-mail shall have the effect of an original, executed instrument. All counterparts of this Amendment shall collectively constitute a single instrument; but, in making proof of this Amendment it shall not be necessary to produce or account for more than one such counterpart executed by each Party hereto. It shall not be necessary for the signature of, or on behalf of, each Party hereto, or that the signature of all persons required to bind any such Party appear on each counterpart of this Amendment.

IN WITNESS WHEREOF, the Parties have executed this Amendment as of the day and year first above written.

LESSOR:

PHOENIX-MESA GATEWAY AIRPORT AUTHORITY, an Arizona joint powers airport authority

By:_____

J. Brian O'Neill, A.A.E.

Executive Director/CEO

LESSEE:

MESA SKYBRIDGE LLC, an Arizona limited liability company

By:_____

Felipe Monroy Torres

Chief Executive Officer

Exhibit A

West Retention Basin

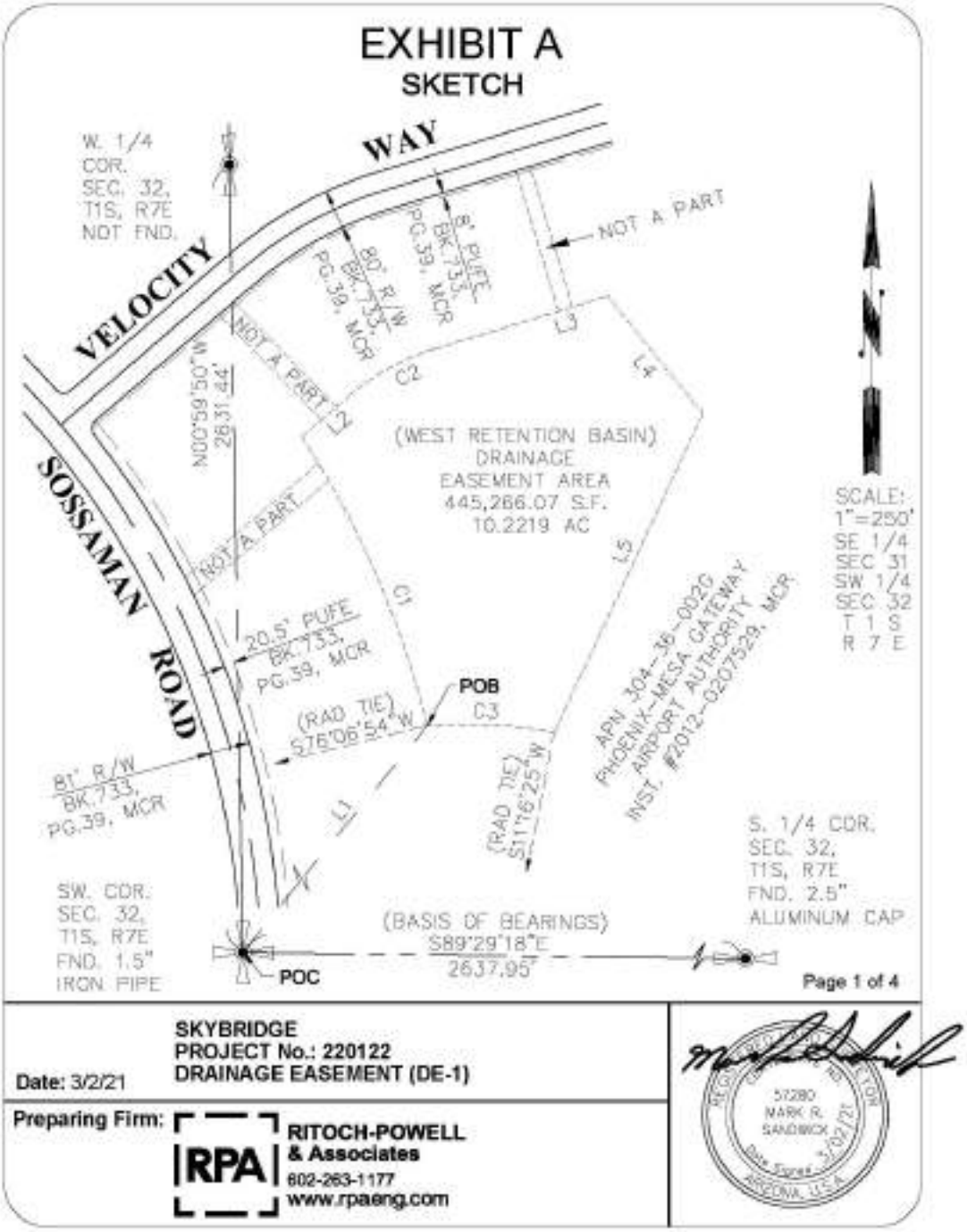

EXHIBIT A
TABLES

CURVE TABLE					
CURVE	DELTA	RADIUS	LENGTH	CHORD	CHORD BRG
C1	19°19'29"	1915.00'	645.89'	642.83'	N23°32'51"W
C2	23°46'26"	460.00'	190.87'	189.50'	N61°13'03"E
C3	15°56'02"	937.00'	260.58'	259.74'	N86°41'36"W

LINE TABLE		
LINE	BEARING	DISTANCE
L1	N13°36'41"E	1528.44'
L2	N49°19'50"E	133.78'
L3	N73°06'16"E	374.28'
L4	S39°05'42"E	307.76'
L5	S24°57'01"W	719.81'

SKYBRIDGE
PROJECT No.: 220122
DRAINAGE EASEMENT (DE-1)

Date: 3/2/21

Preparing Firm:

RITOCH-POWELL & Associates
602-263-1177
www.rpaeng.com

REGISTERED LAND SURVEYOR
CERTIFICATE NO.
57280
MARK R. SANDWICK
Date Signed 3/02/21
ARIZONA, U.S.A.

EXHIBIT A
LEGAL DESCRIPTION

A PARCEL OF LAND BEING ALL OF ONE OF THOSE DRAINAGE EASEMENTS ALSO KNOWN AS WEST RETENTION BASIN OVER THAT TRACT OF LAND AS CONVEYED TO PHOENIX-MESA GATEWAY AIRPORT AUTHORITY BY DEED OF RECORD IN INSTRUMENT NUMBER 2012-0207529, MARICOPA COUNTY RECORDS (MCR) AND AS SHOWN ON THAT MAP OF DEDICATION OF VELOCITY WAY, SOUTH TAXIWAY CIRCLE AND SOUTH CARGO WAY RECORDED IN BOOK 733, PAGE 39, MCR LOCATED IN A PORTION OF THE SOUTHWEST QUARTER OF SECTION 32, TOWNSHIP 1 SOUTH, RANGE 7 EAST OF THE GILA & SALT RIVER MERIDIAN, CITY OF MESA, MARICOPA COUNTY, ARIZONA, MORE PARTICULARLY DESCRIBED AS FOLLOWS:

COMMENCING AT THE SOUTHWEST CORNER OF SAID SECTION 32 (FND 1.5" IRON PIPE) FROM WHICH POINT THE SOUTH QUARTER CORNER THEREOF (2.5" AL CAP) BEARS S 89°29'18" E A DISTANCE OF 2637.95 FEET;

THENCE N 13°36'41" E A DISTANCE OF 1528.44 FEET TO A CUSP ON SAID DRAINAGE EASEMENT AS SHOWN ON SAID MAP OF DEDICATION AND THE BEGINNING OF A NON-TANGENT CURVE TO THE LEFT FROM WHICH POINT THE RAIDIUS POINT BEARS S 76°06'54" W, THE POINT OF BEGINNING;

THENCE ALONG THE PERIMETER OF SAID DRAINAGE EASMENT AS SHOWN ON SAID MAP OF DEDICATION THE REMAINING COURSES AND DISTANCES:

THENCE ALONG SAID NON-TANGENT CURVE TO THE LEFT HAVING A RADIUS OF 1915.00 FEET, THROUGH A CENTRAL ANGLE OF 19°19'29" AND HAVING AN ARC LENGTH OF 645.89 FEET;

THENCE N 49°19'50" E A DISTANCE OF 133.78 FEET;

THENCE ALONG THE ARC OF A CURVE TO THE RIGHT HAVING A RADIUS OF 460.00 FEET, THROUGH A CENTRAL ANGLE OF 23°46'26" AND HAVING AN ARC LENGTH OF 190.87 FEET;

THENCE N 73°06'16" E A DISTANCE OF 374.28 FEET;

THENCE S 39°05'42" E A DISTANCE OF 307.76 FEET;

SKYBRIDGE
PROJECT No.: 220122
DRAINAGE EASEMENT (DE-1)

Date: 3/2/21

Preparing Firm: RPA **RITOCH-POWELL & Associates**
602-263-1177
www.rpaeng.com

REGISTERED LAND SURVEYOR
CERTIFICATE NO.
57280
MARK R. SANDWICK
Date Signed 3/02/21
ARIZONA, U.S.A.

EXHIBIT A
LEGAL DESCRIPTION

THENCE S 24°57'01" W A DISTANCE OF 719.81 FEET TO THE BEGINNING OF A NON-TANGENT CURVE TO THE LEFT FROM WHICH POINT THE RADIUS POINT BEARS S 11°16'25" W;

THENCE ALONG SAID NON-TANGENT CURVE TO THE LEFT HAVING A RADIUS OF 937.00 FEET, THROUGH A CENTRAL ANGLE OF 15°56'02" AND HAVING AN ARC LENGTH OF 260.58 FEET TO THE POINT OF BEGINNING.

THE ABOVE DESCRIBED EASEMENT ALSO KNOWN AS WEST RETENTION BASIN CONTAINS 445,266.07 SQUARE FEET OR 10.2219 ACRES OF LAND, MORE OR LESS, INCLUDING ANY EASEMENTS OF RECORD.

THE BASIS OF BEARING FOR THE ABOVE DESCRIPTION IS S 89°29'18" E FOR THE SOUTH LINE OF THE SOUTHWEST QUARTER OF SECTION 32, TOWNSHIP 1 SOUTH, RANGE 7 EAST OF THE GILA & SALT RIVER MERIDIAN, CITY OF MESA, MARICOPA COUNTY, ARIZONA, AS SHOWN ON THE PLSS SUBDIVISION RECORD OF SURVEY-MARICOPA COUNTY GEODETIC DENSIFICATION AND CADASTRAL SURVEY RECORDED IN BOOK 609, PAGE 29, MARICOPA COUNTY RECORDS.

SKYBRIDGE
PROJECT No.: 220122
DRAINAGE EASEMENT (DE-1)

Date: 3/2/21

Preparing Firm: RPA **RITOCH-POWELL & Associates**
602-263-1177
www.rpaeng.com

REGISTERED LAND SURVEYOR
CERTIFICATE NO.
57280
MARK R.
SANDWICK
Date Signed 3/02/21
ARIZONA, U.S.A.

Phoenix-Mesa Gateway Airport

FISCAL YEAR 2022 BUDGET

Phoenix-Mesa Gateway Airport

Key Assumptions

1. Member contributions for FY22 will continue to fund capital improvements.
2. Enplaning passenger activity fell in FY20 by 16% and FY21 is projected to fall another 14% year-over-year. FY22's budget turns this trend around with an increase of 30% over FY21, but still down 7% from FY19.
3. Fuel sales will be down by ($1.068M); Volume ($480K) and Price ($588K).
4. Aero and Non-Aero Lease Income will be up a combined $626K or 16.8%
5. Air-Service Incentive Program carries over from previous fiscal year.
6. Operating Contingency is 10% of total expenses from unrestricted cash reserve.

FY22 Operating Budget Revenue

Operating Revenue	FY21 Budget	FY22 Budget	Difference	%
Aeronautical	$ 16,609,015	$ 15,998,448	$ (610,568)	-4%
Non-Aeronautical	8,424,515	7,545,356	(879,159)	-10%
Total Operating Revenue	$ 25,033,530	$ 23,543,804	$ (1,489,727)	-6%

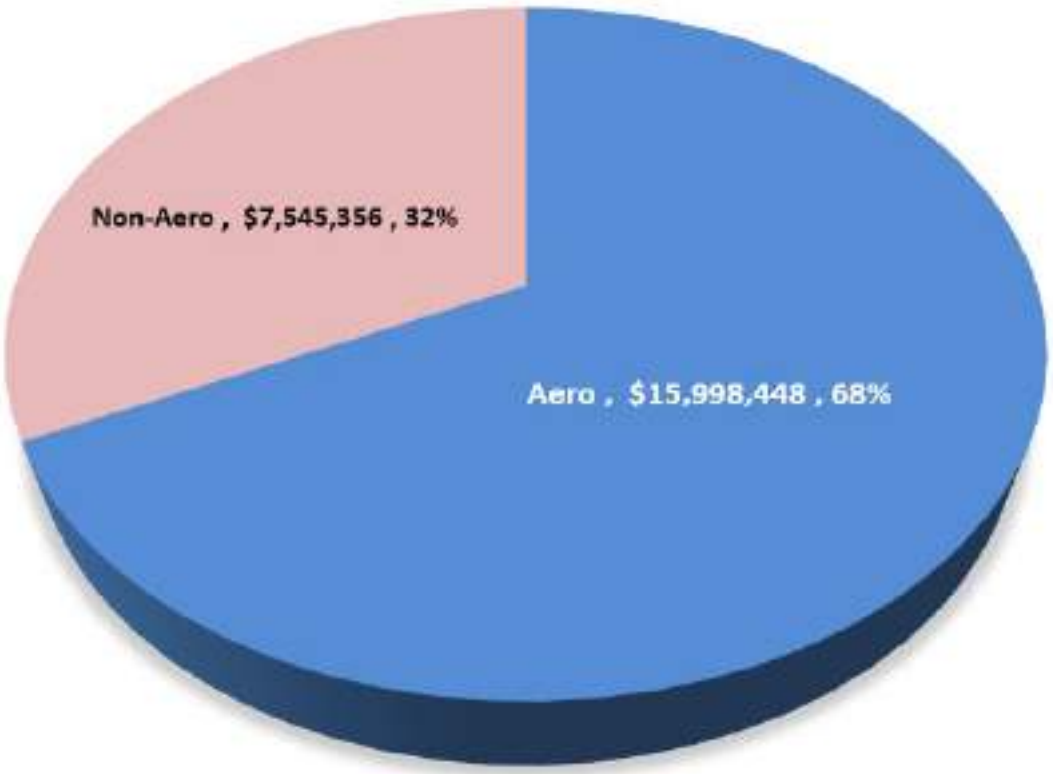

FY22 AERO Operating Revenue Graph

Phoenix-Mesa Gateway Airport

FY22 AERO-Operating Revenue Budget $16.0M

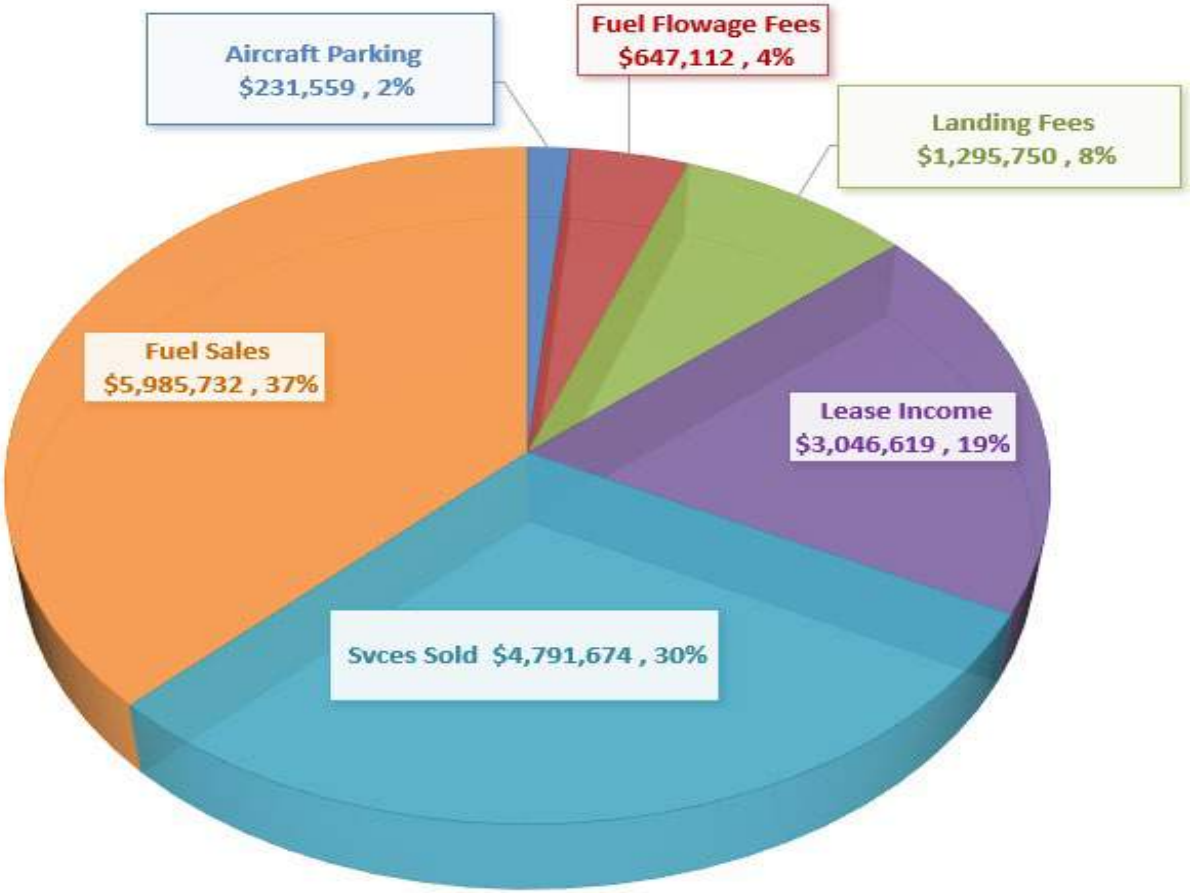

FY22 NON-AERO Operating Revenue Graph

Phoenix-Mesa Gateway Airport

FY22 Non-Aero Revenue Budget $7.5M

FY22 Operating Expense Graph

Phoenix-Mesa Gateway Airport

FY22 Expense Budget $23.5M

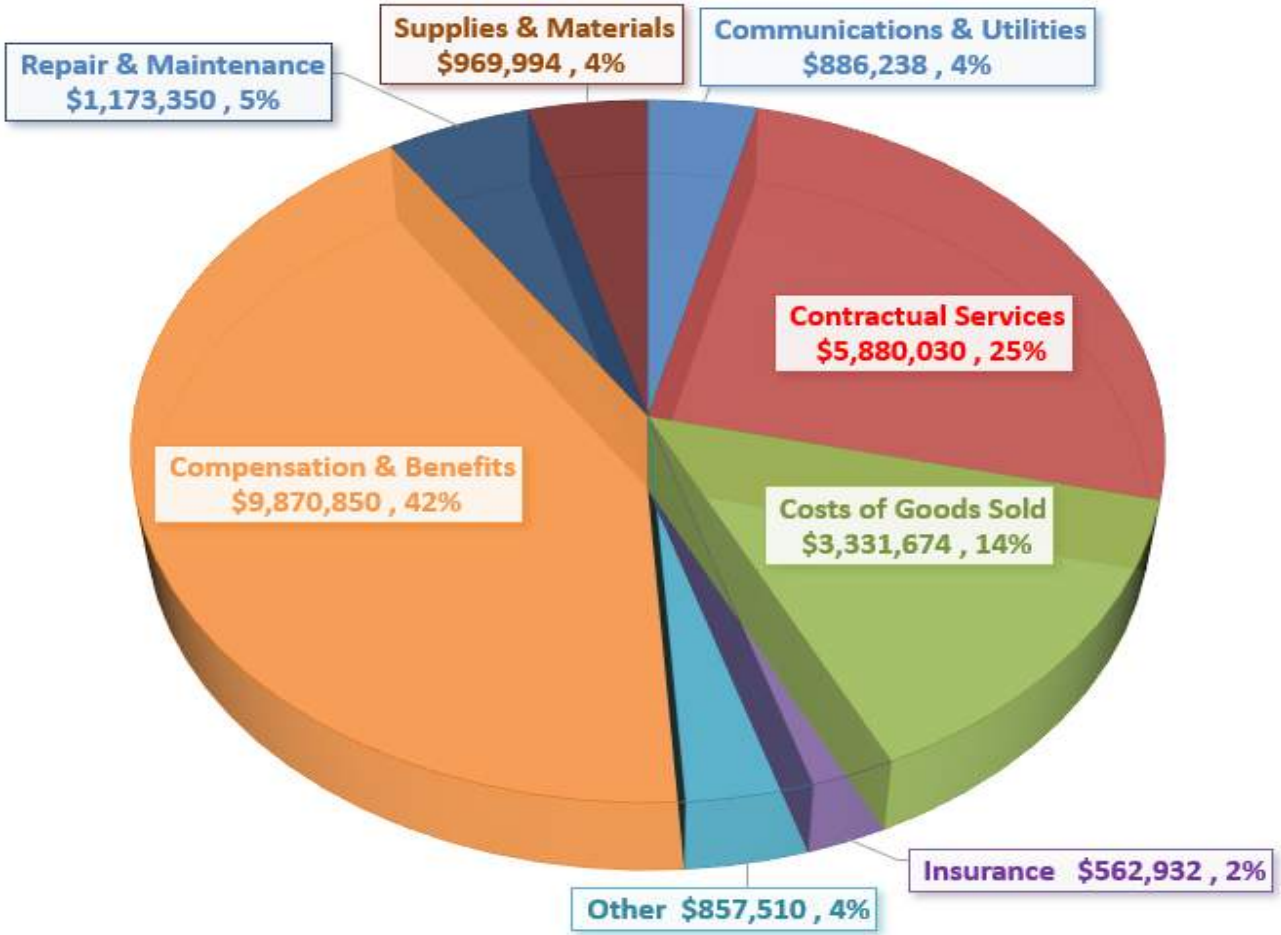

FY22 Operating Budget Adjusted Expenses

Phoenix-Mesa Gateway Airport

	FY21 Budget	FY22 Budget	Difference	%
Total Operating Expenses before Depreciation	$24,635,253	$23,532,578	($1,102,675)	-4%

The following items are activity and contractual obligations, if they were held at FY21 levels, operating expenses would have decreased by -5%.

US Customs Full Recovery for user fee stations increase		$61,842		
Fire Protection increase		$43,429		
Police Protection increase		$34,203		
Adjustments for FY22 Expenses		-$139,474		
Adjusted Total Operating Expenses before Depreciation	$24,635,253	$23,393,104	($1,242,149)	-5%

FY22 Budget Full Time Equivalents by Department

Phoenix-Mesa Gateway Airport

PMGAA Full Time Equivalents

Department	FY21	FY22	Diff	
Accounting	8	8	0	
Business Dev	5	5	0	
Comm Gov Relations	3.5	3.5	0	
Exec Office	2	2	0	
Engineering	16.5	16	-.5	Combined 2 positions
Fixed Based Operator	34	33	-1	Voluntary separation no replacement
Human Resources	3	3	0	
Information Tech	3	3	0	
Operations	37	35	-2	Reduced number of PT Terminal Agents
	112	108.5	-3.5	

Phoenix-Mesa Gateway Airport

FY22 Operating Budget Summary

Total Operating Revenue	$ 23,543,804
Total Operating Expenses	(23,532,578)
Operating Income	$11,226
Cash from Unrestricted Reserve	$ 4,353,258
Potential Air Incentive	(2,000,000)
10% Contingency	(2,353,258)
	-
Total Budgeted Operating Expense Capacity	$ (27,885,836)

Phoenix-Mesa Gateway Airport

FY22 Capital Budget Summary

FY22 Capital Budget	$ 17,724,000
Carry Overs from FY21	22,758,093
FY22 Capital Contingency	1,000,000
	$ 41,482,093

Phoenix-Mesa Gateway Airport

FY22 Debt Service Budget

FY22 Lease Aero Revenue (City of Mesa/Able)	$ 1,297,750
Principal Payment	(530,000)
Interest Payment	(767,750)
FY22 Debt Service Payment	$ (1,297,750)
Remaining Balance of Series 2012 Special Facility Revenue Bond	$ 15,465,000

Phoenix-Mesa Gateway Airport

FY22 Operating, Capital, and Debt Service Budget Combined Summary

Total Operating Expense	$ 23,532,578
Potential Air Incentive	2,000,000
10% Contingency	2,353,258
FY22 Capital Budget	17,724,000
FY21 Carry Over Capital Projects	22,758,093
Capital/Maintenance Reserve	1,000,000
Debt Service Payment	1,297,750
Total Budget Operating and Capital	$ 70,665,679

Phoenix-Mesa Gateway Airport

FY22 Capital Improvement Program Funding Summary

FAA Grants	$ 12,748,400
Member Contributions	4,060,000
ADOT	625,800
PMGAA Cash Reserves	289,800
	$ 17,724,000

FY21 Capital Carry Over Funding Summary

Phoenix-Mesa Gateway Airport

FY21 Capital Carry Over Funding Sources

FAA Grants	$ 13,350,000
PFC	5,670,000
ADOT	1,513,205
PMGAA Cash Reserves	2,224,888
	$ 22,758,093

FY22 5-Year Capital Project Plan

Phoenix-Mesa Gateway Airport

5 -Year Capital Project Plan

	FY22	FY23	FY24	FY25	FY26
Airfield	$19,600,000	$19,248,005	$23,025,000	$13,075,000	$22,000,000
Terminal	52,000	-	1,000,000	9,000,000	-
Roadways & Parking	1,160,000	710,000	-	-	-
Equipment	467,000	1,435,000	251,000	295,000	40,000
Vehicles	-	325,000	60,000	132,500	-
Infor & Technology	230,000	125,000	470,000	1,215,000	405,000
Fuel Farm	750,000	600,000	575,000	-	-
Blding Improvements	85,000	960,000	-	-	-
Other	280,088	270,000	-	-	-
	$22,624,088	$23,673,005	$25,381,000	$23,717,500	$22,445,000

Funding Sources for 5-Year Capital Plan

Phoenix-Mesa Gateway Airport

5-Year Capital Plan Funding Sources

FAA Grants	$ 88,019,200
PMGAA Cash Reserves	16,972,789
PFC	7,670,000
ADOT	5,178,605
	$117,840,593

FY21 Budget Questions?

Phoenix-Mesa Gateway Airport

Comments or Questions

Phoenix-Mesa Gateway Airport Authority
5835 S Sossaman Road
Mesa, Arizona 85212-6014
www.gatewayairport.com

Board Action Item

Re: Resolution 21-06

To: **Board of Directors**
From: **Chuck Odom, Chief Financial Officer**
Through: **J. Brian O'Neill, A.A.E., Executive Director/CEO**

Subject: **Operating and Capital Budget for Fiscal Year ending June 30, 2022**
Date: **March 16, 2021**

Proposed Motion
To adopt the proposed Operating Budget, Capital Budget, and Member Government Contributions for the fiscal year ending June 30, 2022.

Narrative
The following is an overview of the proposed budgets.

Key Assumptions for FY22 Budget

1. Member contributions will continue to fund capital improvements.
2. Enplaning passenger activity fell in FY20 by 16% and FY21 is projected to fall another 14% year-over-year. FY22's budget turns this trend around with an increase of 30% over FY21, but still down 7% from FY19.
3. Fuel sales will be down by ($1.068M); Volume ($480K) and Price ($588K).
4. Aero and Non-Aero Lease Income will be up a combined $626K or 16.8%
5. Air-Service Incentive Program carries over from previous fiscal year.
6. Operating Contingency is 10% of total expenses from unrestricted cash reserve.

RESOLUTION NO. 21-06

WHEREAS, the Phoenix-Mesa Gateway Airport Authority ("Authority"), a joint powers airport authority formed pursuant to Arizona Revised Statute §28-8521 *et seq.* owns and operates the Phoenix-Mesa Gateway Airport ("Airport"); and

WHEREAS, the Airport Authority is required pursuant to Arizona Revised Statutes and Section 9 of the Joint Powers Airport Authority Agreement to recommend to the governing bodies of the Airport Authority's members an operating budget, capital budget, and capital improvement program for each fiscal year; and

NOW, THEREFORE, BE IT RESOLVED by the Board of Directors of the Phoenix-Mesa Gateway Airport Authority as follows:

> **The Phoenix-Mesa Gateway Airport Authority Board of Directors hereby adopts the Phoenix-Mesa Gateway Airport Authority Fiscal Year 2022 Operating Budget in the amount of $27,885,836, the Fiscal Year 2022 Phoenix-Mesa Gateway Airport Authority Capital Improvement Program and Debt Service in the amount of $42,779,843 and incorporated as if fully set forth herein, subject to the authority granted to the Executive Director/CEO under Board Policy #15-04, and including the member government contributions and proportions provided as follows: City of Mesa $1,700,000 (41.87%); City of Phoenix $1,300,000 (32.02%); Gila River Indian Community $450,000 (11.08%); Town of Gilbert $350,000 (8.62%); Town of Queen Creek $130,000 (3.20%); City of Apache Junction $130,000 (3.20%).**

Passed and adopted by the Authority this 16th day of March, 2021.

Gail Barney, Chair

ATTEST:

Misty Johnson, Clerk of the Board

APPROVED AS TO FORM:

Jill Casson Owen, Attorney

FY22 Operating Budget Highlights

Operating Revenues:	**FY21 Budget**	**FY22 Budget**	**Difference**	**%**
Aero Op Rev: Aircraft Parking	$ 235,409	$ 231,559	$ (3,850)	-2%
Aero Op Rev: Fuel Flowage	716,660	647,112	(69,548)	-10%
Aero Op Rev: Landing Fees	1,269,948	1,295,750	25,803	2%
Aero Op Rev: Lease Income	2,513,700	3,046,619	532,919	21%
Aero Op Rev: Svcs Sold	4,818,740	4,791,674	(27,066)	-1%
Aero Op Rev: Fuel Sales	7,054,558	5,985,732	(1,068,826)	-15%
Total Aero Op Revenue	16,609,015	15,998,448	(610,568)	-4%
Non-Aero Op Rev: Concess	988,900	883,000	(105,900)	-11%
Non-Aero Op Rev: Lease Inc	1,205,334	1,298,587	93,253	8%
Non-Aero Op Rev: Parking	3,880,955	3,343,618	(537,337)	-14%
Non-Aero Op Rev: Rental Car	2,187,000	1,858,950	(328,050)	-15%
Non-Aero Op Rev: Svcs Sold	162,326	161,200	(1,126)	-1%
Total Non-Aero Op Revenue	8,424,515	7,545,356	(879,159)	-10%
Total Operating Revenue	$ 25,033,530	$ 23,543,804	$ (1,489,727)	-6%

Operating Expenditures:	**FY21 Budget**	**FY22 Budget**	**Difference**	**%**
Communication & Utilities	$ 949,911	$ 886,238	$ (63,673)	-7%
Contractual Services	5,860,383	5,880,030	19,647	0%
Cost of Goods Sold	4,459,955	3,331,674	(1,128,281)	-25%
Insurance	518,481	562,932	44,451	9%
Other	876,148	857,510	(18,638)	-2%
Compensation & Benefits	9,384,935	9,870,850	485,915	5%
Repair & Maintenance	1,624,050	1,173,350	(450,700)	-28%
Supplies & Materials	961,389	969,994	8,605	1%
Total Operating Expense	$ 24,635,253	$ 23,532,578	$ (1,102,674)	-4%
Operating Income	$ 398,277	$ 11,224	$ (387,052)	-97%
Total Operating Expense	$ 24,635,253	$ 23,532,578	(1,102,674)	-4%
Potential Air Incentive	2,000,000	2,000,000	-	0%
10% Contingency	2,463,525	2,353,258	(110,267)	-4%
Total Budgeted Operating Expense Capacity	$ 29,098,778	$ 27,885,836	$ (1,212,942)	-4%

Capital Improvement Program (CIP) Project Summary

The proposed capital budget for FY22 is $17,724,000. The projects are listed in Attachment 1 with more detailed description of the projects in Attachment 2. The carry over capital projects from FY21 total $22,758,093 and are listed in Attachment 3 with the descriptions in Attachment 4.

FY22 Capital Improvement Program Funding Summary

FAA Grants	$ 12,748,400
Member Contributions	4,060,000
ADOT	625,800
PMGAA Cash Reserve	289,800
Total for FY22	$ 17,724,000

FY21 Carry Over Capital Funding Sources

FAA Grants	$ 13,350,000
PFC's	5,670,000
ADOT	1,513,205
PMGAA Cash Reserves	2,224,889
Total for FY21 Carry Over	$ 22,758,094

Total Operating, Capital and Debt Service Budget Combined

Total Operating Expense	$ 23,532,578
Potential Air Incentive	2,000,000
10% Operating Expense Contingency	2,353,258
FY22 Capital Budget	17,724,000
FY21 Carry Over Capital Projects	22,758,093
Capital Budget Contingency	1,000,000
Debt Service Payment	1,297,750
Total Budget Operating and Capital	$ 70,665,679

Attachment(s)

1. FY22 Proposed Capital Budget
2. FY22 Capital Improvement Project Descriptions
3. FY21 Carry Over Capital Improvement Projects
4. FY21 Carry Over Capital Improvement Project Descriptions
5. FY22 Capital Projects Location Map

Phoenix- Mesa Gateway Airport Authority FY22 Capital Budget

ACIP

Project Category	Dept	Project ID - Project Name	Cost Estimate	Funding Source: FAA	ADOT	PMGAA Match	PMGAA Non-Grant	Project Total
AIR	500	1202-Center Runway 12C/30C Design & Reconstruction	$14,000,000	$12,748,400	$625,800	$625,800		$14,000,000
FUE	500	1216-Fuel Storage Facility Renewal Project V	$1,250,000				$1,250,000	$1,250,000
PKG	700	0998-PARCS system Replacement	$1,100,000				$1,100,000	$1,100,000
SDD	200	1219-Demolition & Relocation of Remote Transmitter Receiver	$270,000				$270,000	$270,000
EQP	500	1214-Replc PC Air Cycle 2 Units	$195,000				$195,000	$195,000
RDW	500	1218-Daily Lot Reconstruction	$170,000				$170,000	$170,000
ITS	900	1093-Virtual Server/VMWare Software Refresh	$130,000				$130,000	$130,000
AIR	700	1213-Taxiway Alpha Shoulder Rehab	$100,000				$100,000	$100,000
EQP	500	1221 - Bldg 1080 upgrades HVAC & Lighting	$85,000				$85,000	$85,000
ITS	900	1080-WIFI Upgrade -Clearpass	$75,000				$75,000	$75,000
EQP	600	1217- Replc 2 2013 & 3 2015 Fuel Stands	$65,000				$65,000	$65,000
EQP	600	1215-Replc 2006 Windsor Baggage Belt Loader EQP-287	$65,000				$65,000	$65,000
EQP	700	1022-Replc 1997 Kubota L35 Backhoe -TRACT 321	$55,000				$55,000	$55,000
TRM	500	1220-Terminal Lighting Upgrade Completion	$52,000				$52,000	$52,000
EQP	700	1040-Replc 1999 Amiga Light Towers LTPT-309 & 310	$40,000				$40,000	$40,000
EQP	700	0981-Replc 2013 Graco Line Laser IV Paint Striper -Equip 322	$25,000				$25,000	$25,000
ITS	900	0864-US Customs Technology Refresh	$25,000				$25,000	$25,000
EQP	600	1059-Replc 2000 refurb in 2016 4 PAX GEM Car -EQP 204	$22,000				$22,000	$22,000
			$17,724,000	$12,748,400	$625,800	$625,800	$3,724,000	$17,724,000

PMGAA Total	$4,349,800
Anticipated Member Contributions	$4,060,000
Over/(Under)	$289,800

Phoenix - Mesa Gateway Airport Authority Attachment 2

FY22 Capital Budget

Project # Name	Amount	Description
1202-Center runway 12C/30C Design and Reconstruction	$14,000,000	Design & Reconstruct section 30 of Runway 12C/30C. Approx 2,500 linear feet and include approx 21,000 SY PCCP. Includes shoulders, LED lights, pavement markings, storm drainage, signage.
1216-Fuel Storage Facility Renewal Project V	$1,250,000	Completion of projects not completed in phase IV, 20,000 AVGAS tank replacement of 12,000 gallon tank, OWS replacement, paint piping, install new concrete barrier protection by tanks and add TMS upgrade.
0998-PARCS system Replacement	$1,100,000	PMGAA's parking revenue control system will reach its full usable life cycle by FY20. The existing equipment was installed in 2007/08. The new system will have more advanced technology such as cloud based access portals and customer service functionalities. In addition a License Plate recognition system will be installed to enhance security, customer service and provide for more accurate measures of parking lot usage.
1219-RTR	$270,000	Relocate critical equipment from the existing RTR facility, re-route necessary conduit and demolition existing buildings to make way for future spine road development and project Reinhold.
1214-Replc PC Air Cycle 2 Units	$195,000	PC Air Cycle replacement of final 2 units for terminal area aircraft.
1218- Daily Lot Reconstruction	$170,000	DAYLOT:05B was constructed in 1999 and based on LPMP expected deterioration to 66 by 2022.
1093-Virtual Server/VMWare Software Refresh	$130,000	This is part of the ITS strategy four year life cycle.
1213-Taxiway Alpha Shoulder Rehab	$100,000	Crack, seal and stripe taxiway safety shoulders ongoing pavement preservation.
1221 - Bldg 1080 upgrades HVAC & Lighting	$85,000	Replace dilapidated HVAC and lighting systems in Bldg 1080.
1080-WIFI Upgrade -ClearPass	$75,000	Implement Clearpass application and hardware to existing Public WIFI network to enhance segregation from FBO/Terminal/Admin buildings. Allows advertisement to cell phones and enhances passengers experience all the while delivering airlines services.
1217- Replc 2 2013 & 3 2015 Fuel Stands	$65,000	Replc outdated fuel stands that have created a safety hazard in the operation.
1215-Replc 2006 Windsor Baggage Belt Loader EQP-287	$65,000	Replc existing belt loader that is over life expectancy.
1022-Replc 1997 Kubota L35 Backhoe -TRACT 321	$55,000	Replc Tractor 321 1997 Kubota . Tractor is 23 years old and is nearing the end of its service life which would require extensive refurbishment.

Project # Name	Amount	Description
1220-Terminal Lighting Upgrade Completion	$52,000	Upgrade and replace antiquated lighting with LED units in Phase 2 of the terminal to match the rest of the building.
1040-Replc 1999 Amiga Light Towers LTPT-309 & 310	$40,000	Replc light towers units 309 & 310 from 1997 that are used for emergencies, night work and test work.
0981-Replc 2013 Graco Line Laser IV Paint Striper -Equip 322	$25,000	Equipment was purchased in 2013 and has approached the end of its service life.
0864-US Customs Technology Refresh	$25,000	Perform technology refresh on US Customs computer network and equipment.
1059-Replc 2000 refurb in 2016 4 PAX GEM Car -EQP 204	$22,000	Equipment is beyond useful life. Equipment needed to unload narrow body aircraft bins at the same time or multiple aircraft at the same time.
	$17,724,000	

Attachment 3

		Carry Over Projects FY21-FY22 Funding Sources				
Carry Overs Projects	**FY21-FY22**	**Federal Aviation Admin (FAA)**	**State of Arizona (ADOT)**	**PMGAA Grant Match Funds**	**PMGAA Non-Grant Funds**	**Passenger Facility Charges (PFC)**
927-Construction of ATCT	15,000,000	13,350,000	300,000	1,350,000		
719-Alpha Apron Ph 3 Expansion	5,670,000					5,670,000
741-Design & Recon Twy H Betwn B and 12R	1,248,005		1,123,205	124,800		
1098-Cell phone, TNC, Term Employee Parking	700,000				700,000	
744-Taxiway W Design & Recon	100,000		90,000	10,000		
1205-Airfield Sign - Life Cycle Replacement	30,000				30,000	
1091-Eastside Development Planning	10,088				10,088	
Total Carry Over from FY21	22,758,093	13,350,000	1,513,205	1,484,800	740,088	5,670,000

Phoenix - Mesa Gateway Airport Authority
FY21 Carry Over Capital Budget into FY22

Attachment 4

CIP#	Carry Over	Title/Description
927-Construction of ATCT	$15,000,000	Construct new Air Traffic Control Tower. Site selection study completed by FAA (CIP 888) proposes new site 410' NW of current tower. EA underway (CIP 945). New tower to be 164' eye level height, top of tower 194', 550 SF cab with 8 controller positions.
719-Alpha Apron Ph 3 Expansion	$5,670,000	Construct 28,000 sy pccp apron with paved shoulders, markings, lighting & drainage.
741-Design & Recon Twy H Betwn B and 12R	$1,248,005	Design & Reconstruct Taxiway H between Taxiway B and Runway 12R. 250' x 75' (2,100 SY PCCP), plus 250' x 30' shoulders (1,700 SY AC), including lighting, drainage, signage & marking. According to AP Tech report dated March 2010, the pavement condition index (PCI) is rated at 66.
1098-Cell phone, TNC, Term Employee Parking	$700,000	Construct relocated cell phone and TNC lot near SWC of Ray Road and Sossaman Rd. Includes paving, striping, lighting, and monitor screen.
744-Taxiway W Design & Recon	$100,000	Design and reconstruct a section of Taxiway Whiskey located on the southern portion of the taxiway and north of intersection of W and T. 2013 pavement condition index (PCI) for the worst section is rated at 57, approaching pavement failure if not reconstructed in the intermediate term. The dimensions of the section is 22' x 405' (8,910 SF). Project to address edge lighting, markings, shoulder, drainage as required.
1205-Airfield Sign - Life Cycle Replacement	$30,000	Approx 70 signs that were installed in 1998 are in operation today. New signs are LED lights which are energy efficient and provide a clear even bright light.
1091-Eastside Development Planning	$10,088	Planning for the Northeast future development and land use opportunities.
	$22,758,093	

Phoenix-Mesa Gateway Airport

Attachment 5

FY22 CIP
Project Locations

Projects not on map

998	1214
1093	1080
1217	1215
1022	1040
981	864
1059	

N

Phoenix-Mesa Gateway Airport Authority
5835 S Sossaman Road
Mesa, Arizona 85212-6014
www.gatewayairport.com

Board Action Item

Re: Resolution 21-07

To:	**Board of Directors**
From:	**Chuck Odom, Chief Financial Officer**
Through:	**J. Brian O'Neill, A.A.E., Executive Director/CEO**
Subject:	**Airport Rates and Charges – Recommended Revision Effective April 1, 2021**
Date:	**March 16, 2021**

Proposed Motion
To adopt the revised Airport Rates and Charges schedule with an effective date of April 1, 2021.

Narrative
Airport staff is recommending three changes to the current Airport Rates & Charges schedule. The update has an effective date of April 1, 2021 and is attached for review.

1) Aircraft Landing Fee - Signatory Commercial Carriers – rate increase from $1.28 to $1.32 per 1,000 lbs. maximum gross landing weight (MGLW).

2) Aircraft Landing Fee - Non-Signatory Commercial Carriers – rate increase from $1.92 to $1.98 per 1,000 lbs. MGLW.

3) Aircraft Landing Fee – General Aviation and other eligible aircraft – rate increase from $1.28 or $1.92 to $1.98 per 1,000 lbs. MGLW.

Fiscal Impact
The Landing fee change effective 4/1/2021 is expected to generate approximately $29,000 in revenue for the last quarter of FY21 based on the forecasted commercial flights and estimated general aviation landings through the end of the fiscal year.

Attachment(s)
Proposed Airport Rates & Charges Effective April 1, 2021

RESOLUTION NO. 21-07

WHEREAS, the Phoenix-Mesa Gateway Airport Authority ("Authority"), a joint powers airport authority formed pursuant to Arizona Revised Statute §28-8521 *et seq.* owns and operates the Phoenix-Mesa Gateway Airport ("Airport"); and

WHEREAS the Authority desires to revise the posted schedule of Airport Rates and Charges;

NOW, THEREFORE, BE IT RESOLVED by the Board of Directors of the Authority as follows:

> **The Board of Directors of the Authority hereby adopts the revised Airport Rates and Charges schedule with an effective date of April 1, 2021.**

Passed and adopted by the Authority this 16th day of March, 2021.

Gail Barney, Chair

ATTEST:

Misty Johnson, Clerk of the Board

APPROVED AS TO FORM:

Jill Casson Owen, Attorney

Airport Rates and Charges*

Effective April 1, 2021

This schedule of Airport Rates and Charges is subject to updates. For the latest schedule, please visit the Phoenix-Mesa Gateway Airport website at:
http://www.gatewayairport.com/PoliciesDocumentsandForms#BoardPolicies

Signatory Commercial Carriers	Scheduled, FAR Part 121 and 129 operators, with a 90-day rolling average of 90 or more departures per month.		
Non-Signatory Commercial Carriers	Scheduled, FAR Part 121 and 129 operators, with a 90-day rolling average of less than 90 departures per month.		
Aircraft Landing Fee	Signatory Commercial Carriers, ~~General Aviation and Others~~ - ~~$1.28~~ $1.32 per 1,000 lbs. maximum gross landing weight (MGLW). Non-Signatory Commercial Carriers, General aviation and other eligible aircraft ~~$1.92~~ $1.98 per 1,000 lbs. MGLW. *Exemptions:* 1. U.S. Government owned aircraft 2. Non-revenue and flight training aircraft up to 12,500 MGLW 3. All based flight training school aircraft		
Aircraft Terminal Use Fee	Signatory Commercial Carriers - $50 per Turn Non-Signatory Commercial Carriers - $75 per Turn		
	Commercial Carriers with no operating agreement, see page 2 Non-Operating Agreement Passenger Terminal – Common Use Areas and Equipment		
Aircraft Parking Fee	**Aircraft Passenger Capacity**	**Signatory**	**Non-Signatory**
	1-69	$ 35	$ 53
	70-250	$ 70	$105
	251 or greater	$100	$150
	Will be assessed for the occupancy of an aircraft parking position for more than 3 hours, including terminal gates and remote parking positions, and for each additional 24 hour period.		
Airport Car Rental Customer Facility Charge (CFC)	$2.50 per vehicle rental day		
Aviation Fuel Flowage Fees	Fuel Flowage Fees are paid to PMGAA by any entity or person dispensing or receiving fuel on the Airport in accordance with PMGAA Aviation Fuel Storage, Dispensing & Handling Guidelines.		
	Signatory Commercial Carriers by agreement		
	Non-Signatory Commercial Carriers - $.05 per gallon		
	All Others - $0.12 per gallon		
Fire Suppression Services	$.50 per year per square foot of floor space + $250.00 set-up charge, billed in monthly installments. 15% of annual fees required as security deposit. South ramp connection fee = $209,746.00		
Parking Rates *Grace Period first 10 minutes	**Fee by Location**	**Rate**	**Daily Maximum Charge**
	Hourly Parking Lot	$1.00 / 30 minutes*	$18.00
	Daily Parking Lot	$1.00 / 30 minutes*	$11.00
	Ray Rd Economy Parking Lot Uncovered	$1.00 / 30 minutes*	$ 7.00
	Ray Rd Economy Parking Lot Covered	$1.00 / 30 minutes*	$11.00
	Lost Token Fee with itinerary = Days of Stay x Parking Lot Rate + $20 Lost Token & Admin Fee Lost Token Fee without itinerary (may be adjusted later with proof of itinerary)		$250.00

All Airport Rates and Charges may vary due to terms defined in specific agreements.
Late payments are subject to a 1.5% finance charge. Payment terms are net 30 days unless otherwise specified.

Airport Rates and Charges*

Effective April 1, 2021

Passenger Facility Charge (PFC)	$4.50 per enplaned commercial passenger, Per FAA Approved PFC Application; reference Federal Register: (Vol. 79, Number 3)	
Airport Licenses & Permits	Fuel Dispensing Permit	$100.00 per organization, permit valid for 2 years
	Fuel Handling Permit (includes exam)	$15.50 per individual, permit valid for 2 years
	Fuel Storage & Service Equipment Permit	$38.00 per filtration vessel, permit valid for 2 years
Common Use Terminal Equipment	Signatory Commercial Carriers	$1,250 per month
	Non-Signatory Commercial Carriers	$ 500 per month

Passenger Terminal/Airfield – Exclusive Use Areas

Item	Description	Amount
Terminal Office Space	Exclusive use of airline ticketing and other offices: includes electric, water and maintenance; excludes janitorial services, internet and telephone services	$32.00 per sq. ft. per year
Paved Equipment Staging/Storage Area	Paved staging area in the vicinity of the SIDA in excess of that used during normal aircraft servicing operations	$ 2.00 per sq. ft. per year

Non-Operating Agreement Passenger Terminal – Common Use Areas and Equipment Rates

Item	Description	Aircraft Passenger Capacity	Resources Included	Rate
Full Service	Includes ticket counter(s) and lobby area, secure hold room and boarding area podium, aircraft parking position (2 hours), baggage claim area, and common use computer equipment per flight, as scheduled by Airport Operations. 1 ticket counter = 2 positions	1-69	1 ticket counter, 1 gate podium, 1 shared use hold room, 1 baggage belt, 1 aircraft parking spot	$ 260 per flight
		70-250	2 ticket counters, 1 gate podium, 1 shared use hold room, 1 baggage belt, 1 aircraft parking spot	$ 495 per flight
		251 or greater	3 ticket counters, 2 gate podiums, 2 shared use hold rooms, 1 baggage belt, 1 aircraft parking spot	$ 915 per flight
Ticket Counter and Lobby	Use of 1 ticket counter and shared use of the lobby area for up to 2.5 hours. Includes common use equipment.	1-69	1 ticket counter and lobby	$ 75 per flight
		70-250	2 ticket counters and lobby	$150 per flight
		251 or greater	3 ticket counters and lobby	$ 225 per flight
Boarding Gates – Secured Hold Room	Shared use of secured boarding gate area for up to 2 hours and one aircraft parking position. Includes use of gate podium, common use equipment, and one set of aircraft stairs.	1-69	1 gate podium and 1 hold room	$110 per flight
		70-250	1 gate podium and 1 hold room	$220 per flight
		251 or greater	2 gate podiums and 2 hold rooms	$ 440 per flight
Baggage Claim	Use of baggage claim area and baggage delivery belt/slide.	1-69	1 belt, oversize slide, aircraft parking*	$ 75 per flight

All Airport Rates and Charges may vary due to terms defined in specific agreements.
Late payments are subject to a 1.5% finance charge. Payment terms are net 30 days unless otherwise specified.

	Includes aircraft parking position*. * if associated with a live departure within 3 hours of arrival. Otherwise standard aircraft parking fee applies.	70-250	1 belt, oversize slide, aircraft parking*	$125 per flight
		251 or greater	2 belts, oversize slide, aircraft parking*	$ 250 per flight
Operational Surcharges	Charges for exceeding allocated time slots on common use areas	Ticket counter or gate	Occupying a gate after the scheduled allocation time, resulting in aircraft holding or gate change.	$200 per hour
		Use of ticket counter or gate without prior permission.		$200 plus regular fees
		Failure to use allocated time slot without 48 hour cancellation notice	Negatively impacting another scheduled carrier or causing Airport to shift resources to accommodate.	$200 plus regular fees

U.S. Customs and Border Protection (CBP) Service User Fees	**Category (based on MGLW)**	**Inspection Fee (per aircraft arrival)**
	<5,000	$73.16
	5,001 – 12,500.	$225.10
	12,501 – 35,000	$315.14
	35,001 – 100,000	$432.20
	100,001 – 255,000	$607.77
	> 255,000	$754.09
	Regular service hours are Monday – Friday, 1100 – 1900 hrs. (MST). After-hours by appointment only. For after-hours appointments, there will be a minimum two-hour fee of $377.05 per inspector in addition to the standard user fee shown above. Two hours after the aircraft's scheduled arrival time, each additional 30 minutes required of the U.S. Customs Inspector will incur a $55.71 fee above the $377.05 minimum each.	

Gateway Aviation Services (Fixed Based Operator) Rates and Charges

Aircraft Open Ramp Tie-Down Fees (Space subject to availability)	**Category (based on MGLW)**	**Monthly Tie-Down Fee (2-month minimum)**
	<5,000 lbs.	$44.00
	5,001 – 12,500 lbs.	$98.00
	12,501 – 35,000 lbs.	$201.00
	35,001 – 100,000 lbs.	$316.00
	100,001 – 255,000 lbs.	$672.00
	> 255,000 lbs.	$1,321.00

Daily Ramp Fee	Max Gross Landing Weight	Rate	A purchase of the following fuel gallon minimums will waive the first Daily Ramp Fee per visit. A purchase of a meal from the restaurant located in the Gateway Aviation Center will equate to a $20.00 credit applicable to the first Daily Ramp Fee per visit.
	<5000	$20.00	10
	5,001-12,500	$30.00	75
	12,501-35,000	$90.00	150
	35,001-100,000	$200.00	200
	100,001-255,000	$300.00	500
	>255,001	$500.00	1,000

Phoenix-Mesa Gateway Airport Authority
5835 S Sossaman Road
Mesa, Arizona 85212-6014
www.gatewayairport.com

Management Information Report

To: Board of Directors
From: Chuck Odom, Chief Financial Officer
Through: J. Brian O'Neill, A.A.E., Executive Director/CEO
Re: January 2021 Financials
Date: March 16, 2021

Attached is the monthly Financials Report for January 2021.

Phoenix-Mesa Gateway Airport Authority
AIRPORT - All Operations P&L
January, 2021

	Month of January 2021				Y-T-D as of January 2021			
	Jan FY20 Actual	Jan FY21 Actual	YOY Variance	B/(W)	YTD FY20 Actual	YTD FY21 Actual	Y-T-D Variance	B/(W)
Aeronautical Operating Revenues								
Aircraft Parking	16,612	13,301	(3,311)	-20%	121,289	131,276	9,987	8%
Fuel Flowage Fees	63,353	46,571	(16,782)	-26%	376,775	410,099	33,324	9%
Landing Fees	113,535	94,809	(18,726)	-16%	747,405	783,341	35,936	5%
Lease Income Aero	312,499	297,876	(14,623)	-5%	1,929,004	1,590,633	(338,371)	-18%
Fuel Sales	583,632	372,880	(210,752)	-36%	3,776,720	3,027,919	(748,801)	-20%
Services Sold - Aero	478,850	378,774	(100,076)	-21%	2,851,672	3,429,997	578,325	20%
Sub-total Aero Operating Revenues	1,568,481	1,204,211	(364,270)	-23%	9,802,865	9,373,265	(429,600)	-4.4%
Non-Aeronautical Operating Revenues								
Concessions	73,659	43,978	(29,681)	-40%	473,425	354,692	(118,733)	-25%
Lease Income Non-Aero	102,014	108,197	6,183	6%	694,775	744,117	49,342	7%
Parking	283,229	171,902	(111,327)	-39%	2,323,321	1,521,241	(802,080)	-35%
Rental Car Fees	251,615	65,005	(186,610)	-74%	992,103	574,669	(417,434)	-42%
Svcs Sold - Non Aero	4,626	4,321	(305)	-7%	52,390	27,331	(25,059)	-48%
Sub-total Non-Aero Operating Revenues	715,143	393,403	(321,740)	-45%	4,536,014	3,222,050	(1,313,964)	-29%
Total Operating Revenues	**2,283,624**	**1,597,614**	**(686,010)**	**-30%**	**14,338,879**	**12,595,315**	**(1,743,564)**	**-12%**
Operating Expenses								
Costs of Goods Sold	295,983	204,971	91,012	31%	2,263,257	1,629,015	634,242	28%
Personnel	693,760	813,449	(119,689)	-17%	5,204,668	5,061,533	143,135	3%
Comm & Utilities	56,232	45,660	10,572	19%	513,772	523,700	(9,928)	-2%
Contractual Services	360,304	401,448	(41,144)	-11%	2,637,027	2,751,292	(114,265)	-4%
Insurance	41,752	45,609	(3,857)	-9%	303,267	320,323	(17,056)	-6%
Other	20,412	8,598	11,814	58%	234,930	87,381	147,549	63%
Repair & Maintenance	49,448	31,659	17,789	36%	303,871	252,238	51,633	17%
Supplies & Materials	79,326	72,359	6,967	9%	598,973	454,951	144,022	24%
Air Service Incentives [2,000,000]	0	0	0	0	0	0	0	0
Operating Contingency [2,313,872]	0	0	0	0	0	0	0	0
Total Operating Expenses	**1,597,217**	**1,623,753**	**(26,536)**	-2%	**12,059,765**	**11,080,433**	**979,332**	8%
Operating Income (Loss)	**686,407**	**(26,139)**	**(712,546)**	-104%	**2,279,114**	**1,514,882**	**(764,232)**	-34%
	30.1%	-1.6%			15.9%	12.0%		
Depreciation		**1,380,704**				**10,026,932**		
CARES Act Recovery		**1,218,487**				**8,784,533**		
Total-to-Date CARES Act Recovery		**16,302,440**						

Phoenix-Mesa Gateway Airport Authority
5835 S Sossaman Road
Mesa, Arizona 85212-6014
www.gatewayairport.com

Management Information Report

To: **Board of Directors**
From: **Chuck Odom, Chief Financial Officer**
Through: **J. Brian O'Neill, A.A.E., Executive Director/CEO**
Re: Solicitation Notification
Date: **February 17, 2021**

This report is to provide notification of the active and upcoming solicitations to help ensure compliance with the Phoenix-Mesa Gateway Airport Authority procurement transparency clause. The active activities include the following:

Active/Pending Solicitations

Type Solicitation	Number	Title	Anticipated Contract Award (Board Action)
Invitation for Bid	2021-018-IFB	Passenger Channelization	March 2021
Request for Qualifications	2021-016-RFQ	Master Developer, Gateway*East*	List Creation

Future Solicitations

Type Solicitation	Number	Title	Scheduled for Release	Anticipated Contract Award (Board Action)
Request for Proposals	2021-021-RFP	Janitorial Services	March 2021	July 2021
Request for Qualifications	2021-023-RFQ	Fabrication and Installation of Signs	April 2021	June 2021
Invitation for Bid	2021-022-IFB	ATC Communication Radios	April 2021	June 2021
Invitation for Bid	2021-017-IFB	Alpha Apron Expansion Phase III	May 2021	July 2021
Request for Proposals	2021-019-RFP	Master Developer, Gateway*East*	May 2021	October 2021

Equipment Disposals

Fiscal year totals from sales of decommissioned / nonworking equipment total $17,814.

If you have any questions about the solicitations or the procurement process, please feel free to contact me at 480-988-7613.

Phoenix-Mesa Gateway Airport Authority
5835 S Sossaman Road
Mesa, Arizona 85212-6014
www.gatewayairport.com

Management Information Report

To: **Board of Directors**
From: **Chuck Odom, Chief Financial Officer**
Through: **J. Brian O'Neill, A.A.E., Executive Director/CEO**
Re: Contract Extension – Taxicab Pilot Program
Date: **March 16, 2021**

This report is to provide notification that Airport staff has extended the Terminal Ground Transportation License Agreement – Pilot Program with AAA Cab Service, Inc. The original agreement expiration date was August 31, 2020 and both parties agreed to exercise the six-month renewal option, making the current expiration date February 28, 2021. The new agreement has an effective date of March 1, 2021 and has a six-month term, with one (1) six-month option to extend the agreement.

The pilot program initiated in February 2020 sought to test changes to the on-demand taxicab model at Gateway Airport with the goal of improving customer service. The growth of Transportation Network Companies (TNC's) and the COVID-19 pandemic have presented significant challenges to the on-demand taxicab service model and, unfortunately, disrupted the pilot program intentions. As such, staff is extending the pilot program in hopes of obtaining meaningful evaluations of changes in a more "normal" business climate.

Based on staff's research, there are only three (3) on-demand taxicab providers in the Phoenix metropolitan area with fleet capacity to service Gateway Airport. Two of the providers are dedicated to servicing Phoenix Sky Harbor Airport and the other is AAA Cab Service, Inc., Gateway Airport's current provider.

Airport staff will again evaluate the ground transportation environment prior to the first agreement expiration date to determine if the Airport should offer to exercise the optional extension, conduct a formal solicitation for cab services or any additional options available.

NOTICE AND AGENDA OF MEETING OF THE
PHOENIX-MESA GATEWAY AIRPORT AUTHORITY
BOARD OF DIRECTORS

Pursuant to A.R.S. § 38-431.02, notice is hereby given to the members of the Phoenix-Mesa Gateway Airport Authority and to the public that the Phoenix-Mesa Gateway Airport Authority will hold a meeting open to the public on **Tuesday, April 20, 2021 beginning at 9:00 a.m.** in the Board Room (Saguaro A & B) of the Gateway Administration Building, 5835 South Sossaman Road, Mesa, Arizona. Members of the Phoenix-Mesa Gateway Airport Authority may attend either in person or by telephone. The Board may vote to hold an executive session for the purpose of obtaining legal advice from the Board's attorney on any matter listed on the agenda pursuant to A.R.S. § 38-431.03 (A)(3)&(4).

The agenda for the meeting is as follows:

1. **Call to Order** (Mayor Gail Barney, Chair)
   Members of the Phoenix-Mesa Gateway Airport Authority will attend either in person or via videoconference.

2. **Roll Call** (Mayor Gail Barney, Chair)

3. **Pledge of Allegiance**

4. **Call to the Public**
   Members of the Board may not discuss items that are not on the agenda. Therefore, action taken as a result of public comment will be limited to directing staff to study the matter or scheduling the matter for further consideration and decision at a later date. Maximum of three minutes per speaker.

5. **Executive Director's Report** - J. Brian O'Neill, A.A.E., Executive Director/CEO

6. **COVID Federal Relief Grant Presentation** – Chuck Odom, Chief Financial Officer

7. **Gateway*East* Solicitation Update Presentation** – Shea Joachim, Business Development Director

8. **Consent Agenda**

   a) **Minutes** of the Board Meeting held on March 16, 2021.

   b) **Resolution No. 21-08 –** Authorizing the procurement of security cameras, equipment, and installation from **Convergint Technologies, LLC**, in an amount not to exceed $151,390.96.

   c) **Resolution No. 21-09 –** Authorizing a Development Lease with **SKYPLUS HOTELS, CORP,** an Arizona Corporation, for 4.086 acres located within the SkyBridge Arizona project identified as Lot 116-A. The lease term is SIXTY (60) years commencing on May 1, 2021. To authorize an Adjustment Amendment with **MESA SKYBRIDGE, LLC** to concurrently remove Lot 116-A from the Master Lease Agreement.

   d) **Resolution No. 21-10 –** Authorizing paving services with **Ace Asphalt of Arizona, Inc. (Ace Asphalt)** for Asphalt Rehabilitation Services for the North Remote Aircraft Parking Apron Project under CIP 1229, in an amount not to exceed $440,895.76. Additionally, it is requested that this project be amended into and authorized as part of the 2021 Capital Budget Program.

e) **Resolution No. 21-11 –** Authorizing a Brochure Display and Distribution Concession Agreement with **Certified Folder Display Service, Inc**. The agreement term is four years with two two-year renewal options, commencing October 1, 2021 with a Year 1 Minimum Annual Guarantee (MAG) of $4,500 and percentage rent of 30%.

Consideration and Possible Approval of:

9. **Resolution No. 21-12 –** Authorizing the Executive Director to execute an operating agreement with **TEM Enterprises** for commercial air service at the Airport.

10. **Board Member Comments/Announcements**

11. **Next Meeting: Tuesday, May 18, 2021 at 9:00 a.m.**

12. **Adjournment**

Persons with a disability may request a reasonable accommodation, such as a sign language interpreter, by contacting Misty Johnson at 480-988-7607 or mrjohnson@gatewayairport.com. Requests should be made as early as possible to allow time to arrange the accommodation.

Phoenix-Mesa Gateway Airport

Executive Director's Report

April 2021

Financial Snapshot

OPERATING INCOME	February		Month Variance	FYTD Comparison		FYTD Variance
	FY20	FY21		FY20	FY21	
Revenues	$2,167,073	$1,720,434	($446,639)	$16,505,951	$14,315,749	($2,190,202)
Less Expenses	$2,112,434	$1,554,243	($558,191)	$14,178,080	$12,634,675	($1,543,405)
Operating Income *(before depreciation)*	**$54,639**	**$166,191**	**$111,552**	**$2,327,871**	**$1,681,074**	**($646,797)**

Investment Fund Balances: As of February, Local Governmental Investment Pool (LGIP) 700 = $19,053,589; Wells Fargo; Collateralized Money Market = $2,110,992 and Collateralized CD's = $29,578,660; Total $50,743,241. PMGAA investments decreased in value by a net of ($17,000), due to a market value adjustment of ($25,431) in the LGIP and interest earnings of $8,430 in the Wells Fargo Accounts

Finance and Accounting

It's encouraging to see the increase in commercial passenger activity during the past two months. March is typically Phoenix-Mesa Gateway Airport's (Airport, Gateway Airport) busiest month, but during a global pandemic, nothing is typical. An increase in passengers means increased concession revenue, increased rental car revenue, and increased parking revenue.

Allegiant Air continues to invest in greater Phoenix, adding four new nonstop destinations – Houston, Traverse City, San Diego, and Jackson Hole – at the Airport during the first half of 2021. Phoenix-Mesa Gateway Airport Authority (PMGAA, Authority) is confident these new flights will be very popular with the growing number of Phoenicians and sun seeking visitors choosing Gateway Airport when they want to travel.

PMGAA staff has done a good job controlling expenses during these challenging times, enabling the Authority to maintain a strong financial position while operating the Airport in a secure, convenient, and customer-focused manner. As COVID-19 vaccine distribution increases throughout the summer, PMGAA expects leisure travel to be the first segment of the airline industry to return, with passenger activity at Gateway Airport projected to eclipse pre-pandemic levels before the end of the calendar year.

PMGAA Solicitations

Active/Pending Solicitations

TYPE OF SOLICITATION	Number	Title	Anticipated Contract Award
Request for Qualifications	2021-016-RFQ	Master Developer for Gateway***East***	List Creation
Request for Proposals	2021-021-RFP	Janitorial Services	July 2021

Future Solicitations

TYPE OF SOLICITATION	Number	Title	Scheduled for Release
Invitation for Bid	2021-022-IFB	ATC Communication Radios	April 2021
Request for Qualifications	2021-023-RFQ	Fabrication & Installation of Signs	April 2021
Invitation for Bid	2021-025-IFB	Taxiway W Rehabilitation	May 2021
Invitation for Bid	2021-017-IFB	Alpha Apron Expansion Phase III	May 2021
Request for Proposals	2021-019-RFP	Master Developer for Gateway***East***	May 2021

Airport Operations

just plane easy.

Gateway Airport's tagline is much more than just a clever play on words, it's a statement of expectation. PMGAA expects the air travel experience, from runway to roadway, to be positive and memorable. Parking, airline check-in, security screening, and service from our concessionaires is expected to be efficient, convenient, and friendly. Sure, there are times when things don't go as planned, but PMGAA and its dedicated partners strive to make those customer service failures the exception and certainly not the norm.

There's no arguing that, for more than a year, the virus's global impact has taken its toll on everyone. Thankfully, there is a light at the end of a long and dark tunnel. Vaccines have been administered to nearly half of the U.S. population and hospitalizations and deaths have decreased dramatically nationwide.

In the aviation industry, consumer confidence in air travel is growing and airlines are increasing air service with the hope of returning to 2019 activity levels. At Gateway Airport, our operations team, Transportation Security Administration (TSA) professionals, airline representatives, and other terminal tenants stand ready to try and make every customer's experience…just plane easy.

Operations Statistics

PASSENGER COUNTS		February		% Change	FYTD		% Change
		FY20	FY21		FY20	FY21	
Passengers	**TOTAL**	**173,912**	**97,729**	**-44%**	**1,130,925**	**709,079**	**-37%**
	Deplaned	89,350	50,983	-43%	578,337	364,530	-37%
	Enplaned	84,562	46,746	-45%	552,588	344,549	-38%
Allegiant	**Scheduled**	166,369	97,729	-41%	1,102,903	706,948	-36%
WestJet	**Scheduled**	1,915	0	-100%	7,393	0	-100%
Swoop	**Scheduled**	5,628	0	-100%	19,989	1,698	-92%
Elite/Swift	**Charter**	0	0	0%	640	433	-32%

OPERATIONS	February		% Change	FYTD		% Change
	FY20	FY21		FY20	FY21	
Air Carrier	1,268	1,108	-13%	8,544	7,452	-13%
Military	342	916	168%	2,319	2,512	8%
General Aviation	23,415	20,287	-13%	186,555	163,049	-13%
TOTAL	**25,025**	**22,311**	**-11%**	**197,418**	**173,013**	**-12%**

Engineering and Planning

There's a lot going on at Gateway Airport!

Construction work on Gateway Airport's new air traffic control tower (ATCT, Tower) continues. The project goes vertical this month when the first exterior wall panels are erected, and work begins on the elevator shaft and interior stairwell. The new tower will be 55% taller than the Airport's existing tower and the cab will double controller positions to eight. The new Tower costs approximately $30 million and is scheduled to be completed in summer 2022.

Gateway Airport is planning to create an additional overnight aircraft parking area adjacent to the commercial passenger terminal on the west side of the airfield. This new remain overnight (RON) space will accommodate commercial aircraft, corporate aircraft, U.S. Forest Service aircraft, military aircraft, and other transient aircraft interested in parking at Gateway Airport overnight. This new space will give Gateway Airport increased flexibility to efficiently manage aircraft parking on the ramp during periods of peak activity. A project request is included on the PMGAA Board agenda in April.

Gateway Aviation Services

During the month of February 2021, Gateway Aviation Services, the PMGAA-operated Fixed Base Operator (FBO), pumped nearly 1.7MM gallons of aviation fuel, representing an eight percent decrease compared to February 2020 just prior to the COVID-19 outbreak. YTDFY21, total gallons of fuel pumped is down four percent compared to the same period last fiscal year. PMGAA has recently completed several important fuel farm improvement projects and is now planning to enhance fuel storage capacity to ensure that future regional fuel delivery disruptions won't impact Gateway Airport operations.

FUEL (Gallons)	February			FYTD		
	FY20	FY21	% Change	FY20	FY21	% Change
AvGas	66,867	52,613	-21%	484,255	428,618	-11%
Retail Jet A	41,167	36,309	-12%	344,305	301,624	-12%
Contract	346,261	311,572	-10%	2,771,666	2,992,761	8%
Commercial	1,336,761	1,254,008	-6%	9,118,983	8,479,434	-7%
TOTAL	**1,791,056**	**1,654,502**	**-8%**	**12,719,209**	**12,202,437**	**-4%**

Gateway Airport Announces Discounted Fuel Pricing for Based Aircraft!

Gateway Airport is experiencing an exciting transformation. Increasing investment by domestic and international commercial air carriers and a significant amount of private hangar and aviation-related facility development is dramatically changing the landscape along the Airport's flight line.

This steady growth in activity has prompted PMGAA to undertake a comprehensive review of the fuel pricing strategy offered by Gateway Aviation Services to ensure that PMGAA provides "based aircraft" with competitive fuel pricing. A based aircraft is defined as any operational and airworthy aircraft that has a contractual agreement to be based at Gateway Airport for at least six consecutive months.

Beginning May 1, 2021, a new based aircraft Jet A fuel price will be discounted from Gateway Aviation Services' posted retail pricing on AirNav.com and FltPlan.com. Based aircraft fuel purchases will be discounted $.95/gal. when using a credit card and $1.00/gal. when using cash or our fuel supplier card (Avcard). Please note, there is an additional $.04/gal. charge if the aircraft requires FSII.

Community Noise Report

CALLERS	February		FYTD	
	FY20	FY21	FY20	FY21
Total	18	29	112	117

AIRCRAFT TYPE	February		FYTD	
	FY20	FY21	FY20	FY21
	Callers	Callers	Callers	Callers
Commercial	12	10	83	45
GA Total	2	4	11	28
Helicopter	0	12	4	30
Military	4	3	14	14
Total	18	29	112	117

LOCATION	February		FYTD	
	FY20	FY21	FY20	FY21
Mesa	7	13	52	37
Gilbert	10	8	43	43
Gold Canyon	0	1	0	11
Queen Creek	0	3	7	14
Queen Valley	1	1	5	7
San Tan Valley	0	0	4	0
Apache Junction	0	0	1	0
Chandler	0	3	0	5
TOTAL	18	29	112	117

During the month of February 2021, PMGAA received aircraft noise calls from a total of 29 area residents. This compares to the 18 callers that contacted the Airport about aircraft noise in February 2020. However, unlike the previous year where noise calls were generated by a variety of commercial, general aviation, and military aircraft, this past February callers focused on the increased helicopter activity (12 of 29 total callers) as SRP transported Phoenix East Valley employees to temporary assignments in the Phoenix West Valley.

PMGAA, the Town of Gilbert, and others worked closely with SRP during January – March to try to mitigate the noise impact of the helicopter flights by varying arrival and departure routes to/from the Airport. SRP's temporary employee transportation assignment ended on March 11th.

Business Development

PMGAA is looking for an experienced company, or team of companies, to serve as master developer for the 400-acre Gateway***East*** mixed-used development opportunity located on the east side of the airfield adjacent to SR 24, the Loop 202, and Ellsworth Road. The Authority received 12 qualified submittals during the Request for Qualifications (RFQ) portion of the ongoing selection process. A short list of submitters that PMGAA feels are the "best fit" for the project will be asked to participate in a Request for Proposals (RFP) solicitation designed to give each submitter the opportunity to articulate and share their vision for overall product mix, timing and phasing of development, and the monetary investment needed for infrastructure to unlock and provide access to the 400 acres. The RFP process will kick-off in May and PMGAA hopes to have a master developer selected by the end of 2021.

Marketing and Community Relations

Thank You Councilwoman Williams for 12 Years of Leadership on the PMGAA Board of Directors!

PMGAA is a joint-powers authority with the Cities of Mesa, Phoenix, and Apache Junction; the Towns of Gilbert and Queen Creek; and the Gila River Indian Community as members. Each member community appoints an elected representative to serve on the PMGAA Board of Directors. Board members provide strategic direction to PMGAA staff regarding the operation of the Airport. City of Phoenix Councilwoman Thelda Williams is retiring after 12 years on the Phoenix City Council. She has also served for the past 12 years as Phoenix's representative on the PMGAA Board. All of us at PMGAA will miss Councilmember Williams' leadership, vision, and friendship; and we wish her the very best of luck.

MINUTES OF PUBLIC MEETING OF THE
PHOENIX-MESA GATEWAY AIRPORT AUTHORITY
BOARD OF DIRECTORS | March 16, 2021

A public meeting of the Phoenix-Mesa Gateway Airport Authority (PMGAA) was convened on Tuesday, March 16, 2021, beginning at 9:00 a.m. in the Board Room (Saguaro A&B) of the Gateway Administration Building, 5835 S Sossaman Road, Mesa, Arizona.

Members Present

Mayor Gail Barney, Queen Creek
Councilwoman Thelda Williams, Phoenix (*via videoconference*)
Mayor John Giles, Mesa (*via videoconference*)
Mayor Brigette Peterson, Gilbert
Mayor Chip Wilson, Apache Junction
Lt. Governor Monica Antone, Gila River Indian Community (*via videoconference*)

** Neither present nor represented*

Airport Staff Present

J. Brian O'Neill, Executive Director/CEO
Scott Brownlee, Deputy Director/COO
Chuck Odom, CFO
Misty Johnson, Clerk of the Board
Jill Casson Owen, Attorney (*via videoconference*)

1. **Call to Order** at 9:00 a.m. (Mayor Barney)

2. **Roll Call.**

3. **Pledge of Allegiance.**

   Mayor Barney announced this is Councilwoman Williams' last meeting as a member of the PMGAA Board of Directors. He thanked her for her years of service, guidance, and leadership to this Board.

4. **Call to the Public.**
   There were no public comments.

5. **Executive Director's Report.** J. Brian O'Neill, A.A.E., Executive Director/CEO
   Executive Director O'Neill provided a briefing on PMGAA financial performance, passenger activity, the community noise report, and various Airport projects.
   - Gratitude and appreciation were extended to Councilwoman Williams on behalf of the entire staff of PMGAA for her years of service and leadership. "She will be missed!"
   - Fiscal Year-to-Date (FYT) Net Operating Income is $1,514,882.
   - Commercial passenger activity at Gateway Airport is recovering since a low point in April 2020 due to the COVID-19 pandemic. A FYTD21 report revealed Gateway Airport is down 36% compared to the same time in FYTD20.
   - The federal government has approved a third federal COVID-19 relief package. PMGAA is scheduled to receive approximately $33MM in grants from all three federal relief packages. These federal grants are being used to pay operating expenses during the prolonged virus outbreak. CFO Chuck Odom will review how the federal grant money is being spent at the April PMGAA Board meeting.

DRAFT

- Allegiant Air has announced four new nonstop destinations from Gateway Airport that will begin in the first half of 2021; Houston, Texas; Traverse City, Michigan; San Diego, California; and Jackson Hole, Wyoming. Executive Director O'Neill is scheduled to meet with four prospective airlines (virtually) during April.
- SkyBridge Arizona has completed two important projects - a 53,000 SF industrial building and an 82,500 SF hangar. Both are in various stages of lease. SkyBridge has also held a groundbreaking event for a 127-room Wyndham dual-brand hotel.
- Wetta Ventures 50,000 SF hangar is complete and in negotiations with several prospective tenants.
- Aviation Performance Solutions (APS) is constructing a 65,000 SF hangar/corporate headquarters at the north end of the airfield. The project is scheduled to be completed by the end of April.
- Gateway Executive Airpark's 183,000 SF hangar complex is finalizing the permitting process with the City of Mesa. This significant three-hangar project is comprised of both multi-tenant and single tenant lease opportunities.
- Gateway***East*** is a 400-acre non-aeronautical master development project on the east side of the airfield that PMGAA announced in January. Requests for Qualifications (RFQ) from interested developers are due on Monday, March 22nd. Requests for Proposals (RFP) will be released to a short list in May. PMGAA hopes to have a master developer selected by the end of 2021.
- PMGAA's Terminal Concession Improvement Program continues to progress. O.H.S.O. Brewery, Saguaro Mercantile, and Panera Bread are now open and receiving rave reviews from passengers. Macayo's Mexican Food and a new Infusion Tea & Coffee are scheduled to be completed as passenger activity returns to pre-COVID-19 levels. The Starbucks in Baggage Claim has closed and will not reopen. PMGAA is working with the concessionaire to re-purpose the space. A First Jet Market is planned for the building that houses Gates 1-4. This project is currently on hold until PMGAA explores future plans for improvement of the building.
- The compliance deadline for the Real ID/Arizona Travel ID Program is October 1, 2021. This national program will require all air travelers to possess a federally-compliant driver's license or a valid passport for air travel or to enter federal buildings beginning October 1, 2021.
- The construction of the Air Traffic Control Tower is moving along nicely. Thirty-seven eighty-foot deep caissons and a six-foot thick mat slab foundation have been poured. Pre-cast concrete exterior panels are currently being fabricated and will begin to be installed in April.
- PMGAA is in need of additional aircraft parking ramp space and is currently designing Phase III, and potentially Phase IV, of the Taxiway Alpha Apron Expansion Project.
- PMGAA's new Passenger Channelization project is an important safety enhancement and visual improvement. New concrete barriers will delineate the pathways from terminal gates to each individual aircraft parking position.
- The Taxiway Whiskey Reconstruction project is underway. This ADOT grant funded project will improve a section of pavement directly in front of the commercial passenger terminal.

6. Consent Agenda.

a) Minutes of the Board Meeting held on **January 19, 2021.**

b) Resolution No. 21-02 Authorizing the purchase of materials and the installation of the structures to provide **Passenger Channelization** to and from the Terminal in an amount not-to-exceed $62,950 under CIP 1212.

c) **Resolution No. 21-03** Authorizing the filing of **grant applications** including agreeing to all understandings and assurances contained therein; and, authorizing the acceptance and execution of any Federal Aviation Administration (FAA) or other Federal Agency, State of Arizona, Arizona County or Arizona Local Municipal grant offer(s), applied for or received between July 1, 2021 and June 30, 2022 by the Chair of the Authority, the Executive Director/CEO, Deputy Director/COO or Chief Financial Officer/CFO.

d) **Resolution No. 21-04** Authorizing the purchase of airfield asphalt repair services with **Ace Asphalt of Arizona, Inc**. for an amount not to exceed $121,396.24.

e) **Resolution No. 21-05** Authorizing an Adjustment Amendment to the Master Lease Agreement with **SkyBridge, LLC** for the property located at the southeast corner of Sossaman Road and Velocity Way.

Mayor Chip Wilson moved to approve the Consent Agenda.
Mayor Brigette Peterson seconded the motion.
The motion was carried unanimously

7. **FY22 Budget Presentation** – Chuck Odom, Chief Financial Officer
   - Mr. Odom provided a conceptual budget for the Board's review. The request for the Board to adopt the FY22 Operating Budget and Capital Budget is listed on this agenda.
   - Mayor Giles asked about the American Rescue Plan funding and to what extent that will impact the budget. CFO Odom responded that those funds are applied to operating expenditures. A detailed breakdown is scheduled for next month's agenda when CFO Odom gives the COVID Federal Relief Grant presentation.

Consideration and Possible Approval of:

8. **Resolution No. 21-06 –** Adoption of the proposed **Operating Budget, Capital Budget, and Member Government Contributions** for the fiscal year ending June 30, 2022.

Councilwoman Thelda Williams moved to approve Resolution No. 21-06.
Lt. Governor Monica Antone seconded the motion.
The motion was carried unanimously

9. **Resolution No. 21-07 –** Adoption of the revised **Airport Rates and Charges** schedule with an effective date of April 1, 2021.

Mayor Brigette Peterson moved to approve Resolution No. 21-07.
Mayor Chip Wilson seconded the motion.
The motion was carried unanimously

10. **Board Member Comments/Announcements.**
The entire PMGAA Board thanked Councilwoman Williams for her twelve years of leadership, vision, and friendship and wished her well with future endeavors.

11. **Next Meeting: Tuesday, April 20, 2021** at 9:00 a.m. in the Board Room (Saguaro A&B) of the Gateway Administration Building, 5835 S Sossaman Road, Mesa, Arizona. Members of the Phoenix-Mesa Gateway Airport Authority may attend either in person or by telephone/videoconference.

12. Adjournment.

The meeting adjourned at 10:07 a.m.

Dated this _____ day of _____ 2021.

_____
Misty Johnson, Clerk of the Board

Phoenix-Mesa Gateway Airport Authority
5835 S Sossaman Road
Mesa, Arizona 85212-6014
www.gatewayairport.com

Board Action Item

Re: Resolution 21-08

To:	**Board of Directors**
From:	**Doug Wirthgen, Information Technology Director**
Through:	**Scott Brownlee, Deputy Director/COO**
	J. Brian O'Neill, A.A.E., Executive Director/CEO
Subject:	**CIP 1094 - Life Cycle Refresh Airport Security Cameras**
Date:	**April 20, 2021**

Proposed Motion
To authorize the procurement of security cameras, equipment, and installation from Convergint Technologies LLC, in an amount not to exceed $151,390.96.

Narrative
The Phoenix-Mesa Gateway Airport Authority's **(**PMGAA's) Information Technology Service (ITS) ensures the Airport's operation, compliance, and disaster recovery functionality relative to information technology industry standards. In FY20 the practice of security camera and equipment replacement per a pre-established schedule was implemented. The procurement of the remaining 50% of equipment and services will complete the second year of the refresh life cycle program for the security cameras. Cameras are a critical component of the Airport's responsibility to monitor, detect, and resolve all security incidents at the Airport and to remain in compliance with 49CFR1542 and the Airport Security Program. Maintaining a life cycle program is necessary to ensure critical security needs are met. Cameras monitor and record areas for security, safety, wildlife control and incident investigation.

FY21 is the second year of the refresh program, with the remaining 50% of equipment to be replaced. This purchase includes the more expensive PTZ cameras that are capable of pan, tilt and zoom.

As a qualified member of Sourcewell, a cooperative purchasing group, the PMGAA is able to procure goods and services under contracts that have been competitively bid. Sourcewell has currently contracted with Convergint Technologies, LLC for building systems integration, products, and services under Sourcewell Contract #031517-CTL. This contract is available upon request.

Fiscal Impact
This purchase was included in the FY21 Capital Improvement Projects and is funded under CIP 1094.

Attachment(s)
Convergint Technologies, LLC Quote

RESOLUTION NO. 21-08

WHEREAS, the Phoenix-Mesa Gateway Airport Authority ("Authority"), a joint powers airport authority formed pursuant to Arizona Revised Statute §28-8521 *et seq.* owns and operates the Phoenix-Mesa Gateway Airport ("Airport"); and

WHEREAS the Authority desires to authorize the procurement of security cameras, equipment, and installation from Convergint Technologies, LLC in an amount not to exceed $151,390.96;

NOW, THEREFORE, BE IT RESOLVED by the Board of Directors of the Authority as follows:

> **The Board of Directors of the Authority hereby authorizes the procurement of security cameras, equipment, and installation from Convergint Technologies, LLC in an amount not to exceed $151,390.96. This resolution also authorizes the Chair or Executive Director/CEO to make such purchase, with such insertions, deletions, and changes as may be approved by the Chair or Executive Director/CEO, necessary to carry out the purposes and intent of this Resolution.**

Passed and adopted by the Authority this 20th day of April, 2021.

Gail Barney, Chair

ATTEST:

Misty Johnson, Clerk of the Board

APPROVED AS TO FORM:

Jill Casson Owen, Attorney

2330 W. University Dr. , Tempe,Arizona 85281
Phone Mobile 480-828-9449
allen.mcleod@convergint.com

March 24, 2021

Phoenix-Mesa Gateway Airport Authority
Mesa-Gateway Airport

5835 S. Sossaman Road Mesa, Arizona 85212-6399
Attention: Ivan Smith

Quotation: AMC1310964P
RFP#:
License/Cert Sourcewell Contract #: 031517-CTL

Reference: PMGAA 2021 Air-side/Land-side/Non-Secure Air Side, Ancillary, Land Side & Baggage Claim

On behalf of our thousands of global colleagues, I want to personally thank you for considering Convergint Technologies for this project and for providing us with the opportunity to present this proposal addressing your electronic security needs. We are confident that this proven solution is both comprehensive and customized to meet your needs today and in the years ahead.

Convergint has developed a strong reputation for service excellence and is the only company recognized twice as the Systems Integrator of the Year by SDM Magazine. Most recently, Convergint was ranked the 4th largest global systems integrator. This recognition is, in part, a reflection of the strong relationships Convergint has developed with the industry's top technology manufacturers. Convergint Technologies has a strong history of success with similar solutions provided to other clients and would be happy to provide these references upon request.

Our guiding principal has always been to be a customer-focused and service-based company, supported by dedicated and certified professionals who strive to make a daily difference. Our vision of becoming our customers' best service provider is what drives everything we do. After achieving a successful on-time and on-budget project installation, Convergint will provide you with the industry's best on-going service. This service includes our 24/7 customer portal (iCare), designed to track service work orders, project progress, and provide you with detailed metric reporting for continuous improvement.

The following security proposal is specifically designed to meet your needs. As your single point of contact, please feel free to contact me with any additional questions you may have. Thank you again for considering Convergint Technologies as your partner for your electronic security needs.

Materials

Line	Qty	Part	Description	Unit Price	Extended Price
1	Sourcewell Contract No.: 031517-CTL				
2	1.00	Z4-01232001	RACK MOUNT KIT FOR AXIS T8508	$ 27.55	$ 27.55
3	1.00	01191-004	PoE+ managed fanless gigabit network switch, optimized for Axis network products. 2 SFP/RJ45 uplink ports and 8 PoE+ ports with 130W power supply. Built in DCHP server for plug-and-play camera setup. Easy system configuration for effective installation o	$ 379.06	$ 379.06
4	1.00	Z4-5801701	24V DC POWER SUPPLY 250W	$ 379.06	$ 379.06
5	1.00	5801-694	T8516 POE+ NETWORK SWITCH	$ 664.07	$ 664.07
6	--Ancillary/Terminal Air Side--				
7	15V Gate Camera				
8	1.00	AXIS P3375-LVE	Day/night fixed dome with support for WDR-Forensic Capture, Lightfinder and OptimizedIR with built-in IR illumination. IK10 vandal-resistant outdoor casing. Varifocal 3 – 10 mm P-Iris lens with remote zoom and focus. Multiple, individually configurable H.264 and Motion JPEG streams. HDTV 1080p at 30 fps with WDR, and up to 60 fps with WDR disabled. Zipstream for reduced bandwidth and storage. Video motion detection and active tampering alarm. Two-way audio and audio detection. Supervised input / digital output for alarm / event handling. Memory card slot for optional local video storage. Operation in -40 ºC to 55 ºC (-40 ºF to 131 ºF) powered by standard Power over Ethernet. Midspan not included. Includes mounting bracket for wall or junction boxes and weather shield against sun, rain or snow.	$ 949.08	$ 949.08
9	1.00	5700-341	DOME KIT 4 AXIS P33-VE SERIESCLEAR BUBBLE, MOUNTED ON ANALUMINIUM DOME	$ 65.55	$ 65.55
10	1.00	Z4-5504821	T91D61 WALL MOUNT	$ 79.80	$ 79.80
11	1.00	AXIS P33XX-VE ¾" NPS ADAPT 5503-131	Stainless steel adapter used for mounting 3/4" NPS or NPT pipes to AXIS P33XX-VE cameras for cable protection.	$ 27.55	$ 27.55
12	1.00	Z4-5026204	T8120 1-PORT POE MID INJECTOR	$ 56.05	$ 56.05
13	1.00	SW-LNR-CH1	Lenel Network Video Recorder Software - Includes a single channel software license for one IP/ Network based camera channel to be used with either a customer provided PC or adding on to a turnkey system. The customer provided PC must meet or exceed the Minimum DVC-SX PC Configuration requirements listed above (maximum of 63 IP/network channels per recorder based on video resolution, frame rate, quality and processing options being utilized)	$ 204.00	$ 204.00
14	19V & 19P Gate Camera				

Line	Qty	Part	Description	Unit Price	Extended Price
15	1.00	AXIS Q3515-LVE 22MM	Day/night fixed dome with support for Forensic WDR, Lightfinder and OptimizedIR illumination. IK10+ vandal-resistant outdoor casing. Varifocal 9-22 mm P-Iris lens with remote zoom and focus for installation or monitoring. Multiple, individually configurable H.264 and Motion JPEG streams. 1080p at 30 fps with WDR and Lightfinder, and up to 120 fps without. Zipstream for reduced bandwidth and storage. Fence Guard, Motion Guard, Video motion detection, shock detection and active tampering alarm. Two-way audio and audio detection. Supervised inputs / digital outputs for alarm / event handling. Electronic image stabilization. Memory card slot for optional local video storage. Operation in -50 ºC to 60 ºC (-58 ºF to 140 ºF) powered by standard Power over Ethernet or 8-28V DC power with redundancy. Midspan and power supply not included. Includes mounting bracket for wall or junction boxes and weather shield against sun, rain or snow.	$ 996.58	$ 996.58
16	1.00	Z4-5505091	T94M01D PENDANT KIT	$ 56.05	$ 56.05
17	1.00	Z4-5504821	T91D61 WALL MOUNT	$ 79.80	$ 79.80
18	1.00	AXIS P33XX-VE ¾" NPS ADAPT 5503-131	Stainless steel adapter used for mounting 3/4" NPS or NPT pipes to AXIS P33XX-VE cameras for cable protection.	$ 27.55	$ 27.55
19	1.00	Z4-5026204	T8120 1-PORT POE MID INJECTOR	$ 56.05	$ 56.05
20	1.00	SW-LNR-CH1	Lenel Network Video Recorder Software - Includes a single channel software license for one IP/ Network based camera channel to be used with either a customer provided PC or adding on to a turnkey system. The customer provided PC must meet or exceed the Minimum DVC-SX PC Configuration requirements listed above (maximum of 63 IP/network channels per recorder based on video resolution, frame rate, quality and processing options being utilized)	$ 204.00	$ 204.00
21	23P & 23A Gate Camera				
22	1.00	Z4-01565001	Q3527-LVE FIXED DOME	$ 1,281.59	$ 1,281.59
23	1.00	Z4-5505091	T94M01D PENDANT KIT	$ 56.05	$ 56.05
24	1.00	Z4-5504821	T91D61 WALL MOUNT	$ 79.80	$ 79.80
25	1.00	AXIS P33XX-VE ¾" NPS ADAPT 5503-131	Stainless steel adapter used for mounting 3/4" NPS or NPT pipes to AXIS P33XX-VE cameras for cable protection.	$ 27.55	$ 27.55
26	1.00	Z4-5026204	T8120 1-PORT POE MID INJECTOR	$ 56.05	$ 56.05

Line	Qty	Part	Description	Unit Price	Extended Price
27	1.00	SW-LNR-CH1	Lenel Network Video Recorder Software - Includes a single channel software license for one IP/ Network based camera channel to be used with either a customer provided PC or adding on to a turnkey system. The customer provided PC must meet or exceed the Minimum DVC-SX PC Configuration requirements listed above (maximum of 63 IP/network channels per recorder based on video resolution, frame rate, quality and processing options being utilized)	$ 204.00	$ 204.00
28	25V Gate Camera				
29	1.00	Z4-01565001	Q3527-LVE FIXED DOME	$ 1,281.59	$ 1,281.59
30	1.00	Z4-5505091	T94M01D PENDANT KIT	$ 56.05	$ 56.05
31	1.00	Z4-5504821	T91D61 WALL MOUNT	$ 79.80	$ 79.80
32	1.00	AXIS P33XX-VE ¾" NPS ADAPT 5503-131	Stainless steel adapter used for mounting 3/4" NPS or NPT pipes to AXIS P33XX-VE cameras for cable protection.	$ 27.55	$ 27.55
33	1.00	Z4-5026204	T8120 1-PORT POE MID INJECTOR	$ 56.05	$ 56.05
34	1.00	SW-LNR-CH1	Lenel Network Video Recorder Software - Includes a single channel software license for one IP/ Network based camera channel to be used with either a customer provided PC or adding on to a turnkey system. The customer provided PC must meet or exceed the Minimum DVC-SX PC Configuration requirements listed above (maximum of 63 IP/network channels per recorder based on video resolution, frame rate, quality and processing options being utilized)	$ 204.00	$ 204.00
35	26P Gate Camera				
36	1.00	AXIS P3375-LVE	Day/night fixed dome with support for WDR-Forensic Capture, Lightfinder and OptimizedIR with built-in IR illumination. IK10 vandal-resistant outdoor casing. Varifocal 3 – 10 mm P-Iris lens with remote zoom and focus. Multiple, individually configurable H.264 and Motion JPEG streams. HDTV 1080p at 30 fps with WDR, and up to 60 fps with WDR disabled. Zipstream for reduced bandwidth and storage. Video motion detection and active tampering alarm. Two-way audio and audio detection. Supervised input / digital output for alarm / event handling. Memory card slot for optional local video storage. Operation in -40 ºC to 55 ºC (-40 ºF to 131 ºF) powered by standard Power over Ethernet. Midspan not included. Includes mounting bracket for wall or junction boxes and weather shield against sun, rain or snow.	$ 949.08	$ 949.08
37	1.00	5700-341	DOME KIT 4 AXIS P33-VE SERIESCLEAR BUBBLE, MOUNTED ON ANALUMINIUM DOME	$ 65.55	$ 65.55
38	1.00	Z4-5504821	T91D61 WALL MOUNT	$ 79.80	$ 79.80

Line	Qty	Part	Description	Unit Price	Extended Price
39	1.00	AXIS P33XX-VE ¾" NPS ADAPT 5503-131	Stainless steel adapter used for mounting 3/4" NPS or NPT pipes to AXIS P33XX-VE cameras for cable protection.	$ 27.55	$ 27.55
40	1.00	Z4-5026204	T8120 1-PORT POE MID INJECTOR	$ 56.05	$ 56.05
41	1.00	SW-LNR-CH1	Lenel Network Video Recorder Software - Includes a single channel software license for one IP/ Network based camera channel to be used with either a customer provided PC or adding on to a turnkey system. The customer provided PC must meet or exceed the Minimum DVC-SX PC Configuration requirements listed above (maximum of 63 IP/network channels per recorder based on video resolution, frame rate, quality and processing options being utilized)	$ 204.00	$ 204.00
42	0.20	665610-110DB	24-4P Unshielded Solid PE Cat5E Blk Jkt Direct-Burial	$ 283.77	$ 56.75
43	27P Gate Camera				
44	1.00	AXIS P3375-LVE	Day/night fixed dome with support for WDR-Forensic Capture, Lightfinder and OptimizedIR with built-in IR illumination. IK10 vandal-resistant outdoor casing. Varifocal 3 – 10 mm P-Iris lens with remote zoom and focus. Multiple, individually configurable H.264 and Motion JPEG streams. HDTV 1080p at 30 fps with WDR, and up to 60 fps with WDR disabled. Zipstream for reduced bandwidth and storage. Video motion detection and active tampering alarm. Two-way audio and audio detection. Supervised input / digital output for alarm / event handling. Memory card slot for optional local video storage. Operation in -40 ºC to 55 ºC (-40 ºF to 131 ºF) powered by standard Power over Ethernet. Midspan not included. Includes mounting bracket for wall or junction boxes and weather shield against sun, rain or snow.	$ 949.08	$ 949.08
45	1.00	5700-341	DOME KIT 4 AXIS P33-VE SERIESCLEAR BUBBLE, MOUNTED ON ANALUMINIUM DOME	$ 65.55	$ 65.55
46	1.00	Z4-5504821	T91D61 WALL MOUNT	$ 79.80	$ 79.80
47	1.00	Z4-5026204	T8120 1-PORT POE MID INJECTOR	$ 56.05	$ 56.05
48	1.00	AXIS P33XX-VE ¾" NPS ADAPT 5503-131	Stainless steel adapter used for mounting 3/4" NPS or NPT pipes to AXIS P33XX-VE cameras for cable protection.	$ 27.55	$ 27.55

Line	Qty	Part	Description	Unit Price	Extended Price
49	1.00	SW-LNR-CH1	Lenel Network Video Recorder Software - Includes a single channel software license for one IP/ Network based camera channel to be used with either a customer provided PC or adding on to a turnkey system. The customer provided PC must meet or exceed the Minimum DVC-SX PC Configuration requirements listed above (maximum of 63 IP/network channels per recorder based on video resolution, frame rate, quality and processing options being utilized)	$ 204.00	$ 204.00
50	36V Gate Camera				
51	1.00	AXIS P3375-LVE	Day/night fixed dome with support for WDR-Forensic Capture, Lightfinder and OptimizedIR with built-in IR illumination. IK10 vandal-resistant outdoor casing. Varifocal 3 – 10 mm P-Iris lens with remote zoom and focus. Multiple, individually configurable H.264 and Motion JPEG streams. HDTV 1080p at 30 fps with WDR, and up to 60 fps with WDR disabled. Zipstream for reduced bandwidth and storage. Video motion detection and active tampering alarm. Two-way audio and audio detection. Supervised input / digital output for alarm / event handling. Memory card slot for optional local video storage. Operation in -40 ºC to 55 ºC (-40 ºF to 131 ºF) powered by standard Power over Ethernet. Midspan not included. Includes mounting bracket for wall or junction boxes and weather shield against sun, rain or snow.	$ 949.08	$ 949.08
52	1.00	5700-341	DOME KIT 4 AXIS P33-VE SERIESCLEAR BUBBLE, MOUNTED ON ANALUMINIUM DOME	$ 65.55	$ 65.55
53	1.00	Z4-5504821	T91D61 WALL MOUNT	$ 79.80	$ 79.80
54	1.00	AXIS P33XX-VE ¾" NPS ADAPT 5503-131	Stainless steel adapter used for mounting 3/4" NPS or NPT pipes to AXIS P33XX-VE cameras for cable protection.	$ 27.55	$ 27.55
55	1.00	Z4-5026204	T8120 1-PORT POE MID INJECTOR	$ 56.05	$ 56.05
56	1.00	SW-LNR-CH1	Lenel Network Video Recorder Software - Includes a single channel software license for one IP/ Network based camera channel to be used with either a customer provided PC or adding on to a turnkey system. The customer provided PC must meet or exceed the Minimum DVC-SX PC Configuration requirements listed above (maximum of 63 IP/network channels per recorder based on video resolution, frame rate, quality and processing options being utilized)	$ 204.00	$ 204.00
57	41V2 Gate Camera				

Line	Qty	Part	Description	Unit Price	Extended Price
58	1.00	AXIS Q3515-LVE 22MM	Day/night fixed dome with support for Forensic WDR, Lightfinder and OptimizedIR illumination. IK10+ vandal-resistant outdoor casing. Varifocal 9-22 mm P-Iris lens with remote zoom and focus for installation or monitoring. Multiple, individually configurable H.264 and Motion JPEG streams. 1080p at 30 fps with WDR and Lightfinder, and up to 120 fps without. Zipstream for reduced bandwidth and storage. Fence Guard, Motion Guard, Video motion detection, shock detection and active tampering alarm. Two-way audio and audio detection. Supervised inputs / digital outputs for alarm / event handling. Electronic image stabilization. Memory card slot for optional local video storage. Operation in -50 ºC to 60 ºC (-58 ºF to 140 ºF) powered by standard Power over Ethernet or 8-28V DC power with redundancy. Midspan and power supply not included. Includes mounting bracket for wall or junction boxes and weather shield against sun, rain or snow.	$ 996.58	$ 996.58
59	1.00	Z4-5505091	T94M01D PENDANT KIT	$ 56.05	$ 56.05
60	1.00	Z4-5504821	T91D61 WALL MOUNT	$ 79.80	$ 79.80
61	1.00	AXIS P33XX-VE ¾" NPS ADAPT 5503-131	Stainless steel adapter used for mounting 3/4" NPS or NPT pipes to AXIS P33XX-VE cameras for cable protection.	$ 27.55	$ 27.55
62	1.00	Z4-5026204	T8120 1-PORT POE MID INJECTOR	$ 56.05	$ 56.05
63	1.00	SW-LNR-CH1	Lenel Network Video Recorder Software - Includes a single channel software license for one IP/ Network based camera channel to be used with either a customer provided PC or adding on to a turnkey system. The customer provided PC must meet or exceed the Minimum DVC-SX PC Configuration requirements listed above (maximum of 63 IP/network channels per recorder based on video resolution, frame rate, quality and processing options being utilized)	$ 204.00	$ 204.00
64	41V1 Gate Camera				

Line	Qty	Part	Description	Unit Price	Extended Price
65	1.00	AXIS Q3515-LVE 22MM	Day/night fixed dome with support for Forensic WDR, Lightfinder and OptimizedIR illumination. IK10+ vandal-resistant outdoor casing. Varifocal 9-22 mm P-Iris lens with remote zoom and focus for installation or monitoring. Multiple, individually configurable H.264 and Motion JPEG streams. 1080p at 30 fps with WDR and Lightfinder, and up to 120 fps without. Zipstream for reduced bandwidth and storage. Fence Guard, Motion Guard, Video motion detection, shock detection and active tampering alarm. Two-way audio and audio detection. Supervised inputs / digital outputs for alarm / event handling. Electronic image stabilization. Memory card slot for optional local video storage. Operation in -50 ºC to 60 ºC (-58 ºF to 140 ºF) powered by standard Power over Ethernet or 8-28V DC power with redundancy. Midspan and power supply not included. Includes mounting bracket for wall or junction boxes and weather shield against sun, rain or snow.	$ 996.58	$ 996.58
66	1.00	Z4-5505091	T94M01D PENDANT KIT	$ 56.05	$ 56.05
67	1.00	Z4-5504821	T91D61 WALL MOUNT	$ 79.80	$ 79.80
68	1.00	AXIS P33XX-VE ¾" NPS ADAPT 5503-131	Stainless steel adapter used for mounting 3/4" NPS or NPT pipes to AXIS P33XX-VE cameras for cable protection.	$ 27.55	$ 27.55
69	1.00	Z4-5026204	T8120 1-PORT POE MID INJECTOR	$ 56.05	$ 56.05
70	1.00	SW-LNR-CH1	Lenel Network Video Recorder Software - Includes a single channel software license for one IP/ Network based camera channel to be used with either a customer provided PC or adding on to a turnkey system. The customer provided PC must meet or exceed the Minimum DVC-SX PC Configuration requirements listed above (maximum of 63 IP/network channels per recorder based on video resolution, frame rate, quality and processing options being utilized)	$ 204.00	$ 204.00
71	45A & 45V Gate Camera				
72	1.00	AXIS Q3709-PVE	Multi-sensor, day/night fixed dome in an IK10 vandal-resistant outdoor casing. Fixed focal, multi-megapixel lenses, focused from factory. Multiple, individually configurable H.264 and Motion JPEG streams; high-quality 4K video in 30 fps from each of 3 sensors and up to 33 MP resolution in total, together providing a 180º view. Video motion detection and active tampering alarm. Operation in wide temperature range powered by standard Power over Ethernet Plus. Midspan not included. Designed for pendant or wall mount arm with same bayonet joint interface as Axis' PTZ domes. Includes weather shield against sun, rain or snow, easily repaintable to blend in with the environment.	$ 2,279.12	$ 2,279.12

Line	Qty	Part	Description	Unit Price	Extended Price
73	1.00	Z4-5801721	T91L61 WALL-AND-POLE MOUN	$ 94.05	$ 94.05
74	1.00	Z4-5901391	T91G61/T91L61 SCREW KIT	$ 9.50	$ 9.50
75	1.00	AXIS P33XX-VE ¾" NPS ADAPT 5503-131	Stainless steel adapter used for mounting 3/4" NPS or NPT pipes to AXIS P33XX-VE cameras for cable protection.	$ 27.55	$ 27.55
76	1.00	AXIS T8133 30W MIDSPAN 5900-294	Single port midspan for Power over Ethernet Plus (PoE+) IEEE 802.3at Type 2 Class 4. Replaces AXIS T8123.	$ 75.05	$ 75.05
77	3.00	SW-LNR-CH1	Lenel Network Video Recorder Software - Includes a single channel software license for one IP/ Network based camera channel to be used with either a customer provided PC or adding on to a turnkey system. The customer provided PC must meet or exceed the Minimum DVC-SX PC Configuration requirements listed above (maximum of 63 IP/network channels per recorder based on video resolution, frame rate, quality and processing options being utilized)	$ 204.00	$ 612.00
78	47V & 47P Gate Camera				
79	1.00	Z4-01565001	Q3527-LVE FIXED DOME	$ 1,281.59	$ 1,281.59
80	1.00	Z4-5505091	T94M01D PENDANT KIT	$ 56.05	$ 56.05
81	1.00	Z4-5504821	T91D61 WALL MOUNT	$ 79.80	$ 79.80
82	1.00	AXIS P33XX-VE ¾" NPS ADAPT 5503-131	Stainless steel adapter used for mounting 3/4" NPS or NPT pipes to AXIS P33XX-VE cameras for cable protection.	$ 27.55	$ 27.55
83	1.00	Z4-5026204	T8120 1-PORT POE MID INJECTOR	$ 56.05	$ 56.05
84	1.00	SW-LNR-CH1	Lenel Network Video Recorder Software - Includes a single channel software license for one IP/ Network based camera channel to be used with either a customer provided PC or adding on to a turnkey system. The customer provided PC must meet or exceed the Minimum DVC-SX PC Configuration requirements listed above (maximum of 63 IP/network channels per recorder based on video resolution, frame rate, quality and processing options being utilized)	$ 204.00	$ 204.00
85	Badging Office				

Line	Qty	Part	Description	Unit Price	Extended Price
86	1.00	AXIS P3374-V 01056-001	Day/night fixed dome with support for WDR-Forensic Capture and Lightfinder. Discreet, IK10 vandal-resistant indoor casing. Varifocal 3 – 10 mm P-Iris lens with remote zoom and focus. Multiple, individually configurable H.264 and Motion JPEG streams. HDTV 720p at 30 fps with WDR, and up to 60 fps with WDR disabled. Zipstream for reduced bandwidth and storage. Video motion detection and active tampering alarm. Two-way audio and audio detection. Supervised input / digital output for alarm / event handling. Memory card slot for optional local video storage. Power over Ethernet, midspan not included.	$ 569.07	$ 569.07
87	1.00	SW-LNR-CH1	Lenel Network Video Recorder Software - Includes a single channel software license for one IP/ Network based camera channel to be used with either a customer provided PC or adding on to a turnkey system. The customer provided PC must meet or exceed the Minimum DVC-SX PC Configuration requirements listed above (maximum of 63 IP/network channels per recorder based on video resolution, frame rate, quality and processing options being utilized)	$ 204.00	$ 204.00
88	Bag Makeup Carousel				
89	1.00	AXIS Q3709-PVE	Multi-sensor, day/night fixed dome in an IK10 vandal-resistant outdoor casing. Fixed focal, multi-megapixel lenses, focused from factory. Multiple, individually configurable H.264 and Motion JPEG streams; high-quality 4K video in 30 fps from each of 3 sensors and up to 33 MP resolution in total, together providing a 180º view. Video motion detection and active tampering alarm. Operation in wide temperature range powered by standard Power over Ethernet Plus. Midspan not included. Designed for pendant or wall mount arm with same bayonet joint interface as Axis' PTZ domes. Includes weather shield against sun, rain or snow, easily repaintable to blend in with the environment.	$ 2,279.12	$ 2,279.12
90	1.00	AXIS T94A01D PENDANT KIT	Pendant kit for the AXIS Q60-series and AXIS P55-series PTZ Network Cameras, enables mount on standard '1,5" NPT threaded brackets. White.	$ 46.55	$ 46.55
91	1.00	Z4-5507271	T91D62 TELESCOPIC PARAPET	$ 331.56	$ 331.56
92	1.00	AXIS P33XX-VE ¾" NPS ADAPT 5503-131	Stainless steel adapter used for mounting 3/4" NPS or NPT pipes to AXIS P33XX-VE cameras for cable protection.	$ 27.55	$ 27.55

Line	Qty	Part	Description	Unit Price	Extended Price
93	3.00	SW-LNR-CH1	Lenel Network Video Recorder Software - Includes a single channel software license for one IP/ Network based camera channel to be used with either a customer provided PC or adding on to a turnkey system. The customer provided PC must meet or exceed the Minimum DVC-SX PC Configuration requirements listed above (maximum of 63 IP/network channels per recorder based on video resolution, frame rate, quality and processing options being utilized)	$ 204.00	$ 612.00
94	0.20	665610-110DB	24-4P Unshielded Solid PE Cat5E Blk Jkt Direct-Burial	$ 283.77	$ 56.75
95	Bag Makeup Exterior				
96	1.00	AXIS Q3709-PVE	Multi-sensor, day/night fixed dome in an IK10 vandal-resistant outdoor casing. Fixed focal, multi-megapixel lenses, focused from factory. Multiple, individually configurable H.264 and Motion JPEG streams; high-quality 4K video in 30 fps from each of 3 sensors and up to 33 MP resolution in total, together providing a 180º view. Video motion detection and active tampering alarm. Operation in wide temperature range powered by standard Power over Ethernet Plus. Midspan not included. Designed for pendant or wall mount arm with same bayonet joint interface as Axis' PTZ domes. Includes weather shield against sun, rain or snow, easily repaintable to blend in with the environment.	$ 2,279.12	$ 2,279.12
97	1.00	Z4-5801721	T91L61 WALL-AND-POLE MOUN	$ 94.05	$ 94.05
98	1.00	Z4-5901391	T91G61/T91L61 SCREW KIT	$ 9.50	$ 9.50
99	1.00	AXIS P33XX-VE ¾" NPS ADAPT 5503-131	Stainless steel adapter used for mounting 3/4" NPS or NPT pipes to AXIS P33XX-VE cameras for cable protection.	$ 27.55	$ 27.55
100	1.00	AXIS T8133 30W MIDSPAN 5900-294	Single port midspan for Power over Ethernet Plus (PoE+) IEEE 802.3at Type 2 Class 4. Replaces AXIS T8123.	$ 75.05	$ 75.05
101	3.00	SW-LNR-CH1	Lenel Network Video Recorder Software - Includes a single channel software license for one IP/ Network based camera channel to be used with either a customer provided PC or adding on to a turnkey system. The customer provided PC must meet or exceed the Minimum DVC-SX PC Configuration requirements listed above (maximum of 63 IP/network channels per recorder based on video resolution, frame rate, quality and processing options being utilized)	$ 204.00	$ 612.00
102	FBO Office Door				

Line	Qty	Part	Description	Unit Price	Extended Price
103	1.00	AXIS P3374-V 01056-001	Day/night fixed dome with support for WDR-Forensic Capture and Lightfinder. Discreet, IK10 vandal-resistant indoor casing. Varifocal 3 – 10 mm P-Iris lens with remote zoom and focus. Multiple, individually configurable H.264 and Motion JPEG streams. HDTV 720p at 30 fps with WDR, and up to 60 fps with WDR disabled. Zipstream for reduced bandwidth and storage. Video motion detection and active tampering alarm. Two-way audio and audio detection. Supervised input / digital output for alarm / event handling. Memory card slot for optional local video storage. Power over Ethernet, midspan not included.	$ 569.07	$ 569.07
104	1.00	SW-LNR-CH1	Lenel Network Video Recorder Software - Includes a single channel software license for one IP/ Network based camera channel to be used with either a customer provided PC or adding on to a turnkey system. The customer provided PC must meet or exceed the Minimum DVC-SX PC Configuration requirements listed above (maximum of 63 IP/network channels per recorder based on video resolution, frame rate, quality and processing options being utilized)	$ 204.00	$ 204.00
105	GAC North Apron				
106	1.00	AXIS Q3709-PVE	Multi-sensor, day/night fixed dome in an IK10 vandal-resistant outdoor casing. Fixed focal, multi-megapixel lenses, focused from factory. Multiple, individually configurable H.264 and Motion JPEG streams; high-quality 4K video in 30 fps from each of 3 sensors and up to 33 MP resolution in total, together providing a 180º view. Video motion detection and active tampering alarm. Operation in wide temperature range powered by standard Power over Ethernet Plus. Midspan not included. Designed for pendant or wall mount arm with same bayonet joint interface as Axis' PTZ domes. Includes weather shield against sun, rain or snow, easily repaintable to blend in with the environment.	$ 2,279.12	$ 2,279.12
107	1.00	AXIS T94A01D PENDANT KIT	Pendant kit for the AXIS Q60-series and AXIS P55-series PTZ Network Cameras, enables mount on standard '1,5" NPT threaded brackets. White.	$ 46.55	$ 46.55
108	1.00	Z4-5507271	T91D62 TELESCOPIC PARAPET	$ 331.56	$ 331.56

Line	Qty	Part	Description	Unit Price	Extended Price
109	3.00	SW-LNR-CH1	Lenel Network Video Recorder Software - Includes a single channel software license for one IP/ Network based camera channel to be used with either a customer provided PC or adding on to a turnkey system. The customer provided PC must meet or exceed the Minimum DVC-SX PC Configuration requirements listed above (maximum of 63 IP/network channels per recorder based on video resolution, frame rate, quality and processing options being utilized)	$ 204.00	$ 612.00
110	0.20	665610-110DB	24-4P Unshielded Solid PE Cat5E Blk Jkt Direct-Burial	$ 283.77	$ 56.75
111	GAC South Apron & 25P				
112	1.00	AXIS Q3709-PVE	Multi-sensor, day/night fixed dome in an IK10 vandal-resistant outdoor casing. Fixed focal, multi-megapixel lenses, focused from factory. Multiple, individually configurable H.264 and Motion JPEG streams; high-quality 4K video in 30 fps from each of 3 sensors and up to 33 MP resolution in total, together providing a 180º view. Video motion detection and active tampering alarm. Operation in wide temperature range powered by standard Power over Ethernet Plus. Midspan not included. Designed for pendant or wall mount arm with same bayonet joint interface as Axis' PTZ domes. Includes weather shield against sun, rain or snow, easily repaintable to blend in with the environment.	$ 2,279.12	$ 2,279.12
113	1.00	AXIS T94A01D PENDANT KIT	Pendant kit for the AXIS Q60-series and AXIS P55-series PTZ Network Cameras, enables mount on standard '1,5" NPT threaded brackets. White.	$ 46.55	$ 46.55
114	1.00	Z4-5507271	T91D62 TELESCOPIC PARAPET	$ 331.56	$ 331.56
115	0.00	AXIS T8133 30W MIDSPAN 5900-294	Single port midspan for Power over Ethernet Plus (PoE+) IEEE 802.3at Type 2 Class 4. Replaces AXIS T8123.	$ 75.05	$ 0.00
116	3.00	SW-LNR-CH1	Lenel Network Video Recorder Software - Includes a single channel software license for one IP/ Network based camera channel to be used with either a customer provided PC or adding on to a turnkey system. The customer provided PC must meet or exceed the Minimum DVC-SX PC Configuration requirements listed above (maximum of 63 IP/network channels per recorder based on video resolution, frame rate, quality and processing options being utilized)	$ 204.00	$ 612.00
117	0.30	665610-110DB	24-4P Unshielded Solid PE Cat5E Blk Jkt Direct-Burial	$ 283.77	$ 85.13
118	Spots 1-2				

Line	Qty	Part	Description	Unit Price	Extended Price
119	1.00	AXIS P1378-LE 01811-001	Outdoor, NEMA 4X, IP66/67 and IK10-rated, 4K resolution, day/night, fixed box camera providing providing Forensic WDR and Lightfinder technology. Features a 1/1.8" image sensor. OptimizedIR, a power-efficient 850nm IR LED technology covering 40 meters (130 feet).Includes an IR corrected varifocal 3.9-10 mm F1.5 P-Iris lens and remote back focus. Camera also supports CS-mount DC-iris lenses and i-CS lenses for remote installation zoom and focus. Multiple, individually configurable H.264, H.265 and Motion JPEG streams; 4K at 25/30 fps. Axis Zipstream technology for reduced bandwidth and storage needs. Video motion detection, shock detection, active tampering alarm and open casing intrusion switch. Corridor format, barrel distortion correction, defogging and electronic image stabilization. Scene profiles. Two-way audio, audio detection with optional analog or digital microphone. Supervised I/O for alarm/event handling, MicroSD/MicroSDHC memory card slot for optional local video storage. Serial port for RS422/485 communication. Operation in -40°C to +60°C. PoE+ class4 or 12-28VDC input. Support for optional AXIS P13 Weathershield Extension A. Includes pre-mounted AXIS Fixed Box IR illuminator Kit A, removable sunshield, wall bracket, Torx T20 screw driver and IP66/67- rated cable glands. Midspan or power supply not included.	$ 1,044.08	$ 1,044.08
120	1.00	LENS CS 12-50 MM F1.4 P-IRIS 8MP 01690-001	Varifocal IR-corrected 12-50 mm P-Iris lens for cameras up to 8 megapixel resolution and 1/1.8" sensor . Compatible with e.g. AXIS Q1645/-LE, AXIS Q1647/-LE, AXIS P1367/-E and P1368-E.	$ 426.56	$ 426.56
121	1.00	Z4-5505141	T94R01P CONDUIT BACK BOX	$ 32.30	$ 32.30
122	1.00	AXIS P33XX-VE ¾" NPS ADAPT 5503-131	Stainless steel adapter used for mounting 3/4" NPS or NPT pipes to AXIS P33XX-VE cameras for cable protection.	$ 27.55	$ 27.55
123	1.00	SW-LNR-CH1	Lenel Network Video Recorder Software - Includes a single channel software license for one IP/ Network based camera channel to be used with either a customer provided PC or adding on to a turnkey system. The customer provided PC must meet or exceed the Minimum DVC-SX PC Configuration requirements listed above (maximum of 63 IP/network channels per recorder based on video resolution, frame rate, quality and processing options being utilized)	$ 204.00	$ 204.00
124	0.10	665610-110DB	24-4P Unshielded Solid PE Cat5E Blk Jkt Direct-Burial	$ 283.77	$ 28.38
125	Spots 2-4				

Line	Qty	Part	Description	Unit Price	Extended Price
126	1.00	AXIS Q3709-PVE	Multi-sensor, day/night fixed dome in an IK10 vandal-resistant outdoor casing. Fixed focal, multi-megapixel lenses, focused from factory. Multiple, individually configurable H.264 and Motion JPEG streams; high-quality 4K video in 30 fps from each of 3 sensors and up to 33 MP resolution in total, together providing a 180º view. Video motion detection and active tampering alarm. Operation in wide temperature range powered by standard Power over Ethernet Plus. Midspan not included. Designed for pendant or wall mount arm with same bayonet joint interface as Axis' PTZ domes. Includes weather shield against sun, rain or snow, easily repaintable to blend in with the environment.	$ 2,279.12	$ 2,279.12
127	1.00	Z4-5801721	T91L61 WALL-AND-POLE MOUN	$ 94.05	$ 94.05
128	1.00	Z4-5901391	T91G61/T91L61 SCREW KIT	$ 9.50	$ 9.50
129	1.00	AXIS P33XX-VE ¾" NPS ADAPT 5503-131	Stainless steel adapter used for mounting 3/4" NPS or NPT pipes to AXIS P33XX-VE cameras for cable protection.	$ 27.55	$ 27.55
130	3.00	SW-LNR-CH1	Lenel Network Video Recorder Software - Includes a single channel software license for one IP/ Network based camera channel to be used with either a customer provided PC or adding on to a turnkey system. The customer provided PC must meet or exceed the Minimum DVC-SX PC Configuration requirements listed above (maximum of 63 IP/network channels per recorder based on video resolution, frame rate, quality and processing options being utilized)	$ 204.00	$ 612.00
131	Spots 4-6				
132	1.00	AXIS Q3709-PVE	Multi-sensor, day/night fixed dome in an IK10 vandal-resistant outdoor casing. Fixed focal, multi-megapixel lenses, focused from factory. Multiple, individually configurable H.264 and Motion JPEG streams; high-quality 4K video in 30 fps from each of 3 sensors and up to 33 MP resolution in total, together providing a 180º view. Video motion detection and active tampering alarm. Operation in wide temperature range powered by standard Power over Ethernet Plus. Midspan not included. Designed for pendant or wall mount arm with same bayonet joint interface as Axis' PTZ domes. Includes weather shield against sun, rain or snow, easily repaintable to blend in with the environment.	$ 2,279.12	$ 2,279.12
133	1.00	Z4-5801721	T91L61 WALL-AND-POLE MOUN	$ 94.05	$ 94.05
134	1.00	Z4-5901391	T91G61/T91L61 SCREW KIT	$ 9.50	$ 9.50

Line	Qty	Part	Description	Unit Price	Extended Price
135	1.00	AXIS P33XX-VE ¾" NPS ADAPT 5503-131	Stainless steel adapter used for mounting 3/4" NPS or NPT pipes to AXIS P33XX-VE cameras for cable protection.	$ 27.55	$ 27.55
136	3.00	SW-LNR-CH1	Lenel Network Video Recorder Software - Includes a single channel software license for one IP/ Network based camera channel to be used with either a customer provided PC or adding on to a turnkey system. The customer provided PC must meet or exceed the Minimum DVC-SX PC Configuration requirements listed above (maximum of 63 IP/network channels per recorder based on video resolution, frame rate, quality and processing options being utilized)	$ 204.00	$ 612.00
137	0.30	665610-110DB	24-4P Unshielded Solid PE Cat5E Blk Jkt Direct-Burial	$ 283.77	$ 85.13
138	Spots 6-8				
139	1.00	AXIS Q3709-PVE	Multi-sensor, day/night fixed dome in an IK10 vandal-resistant outdoor casing. Fixed focal, multi-megapixel lenses, focused from factory. Multiple, individually configurable H.264 and Motion JPEG streams; high-quality 4K video in 30 fps from each of 3 sensors and up to 33 MP resolution in total, together providing a 180º view. Video motion detection and active tampering alarm. Operation in wide temperature range powered by standard Power over Ethernet Plus. Midspan not included. Designed for pendant or wall mount arm with same bayonet joint interface as Axis' PTZ domes. Includes weather shield against sun, rain or snow, easily repaintable to blend in with the environment.	$ 2,279.12	$ 2,279.12
140	1.00	Z4-5801721	T91L61 WALL-AND-POLE MOUN	$ 94.05	$ 94.05
141	1.00	Z4-5901391	T91G61/T91L61 SCREW KIT	$ 9.50	$ 9.50
142	1.00	AXIS P33XX-VE ¾" NPS ADAPT 5503-131	Stainless steel adapter used for mounting 3/4" NPS or NPT pipes to AXIS P33XX-VE cameras for cable protection.	$ 27.55	$ 27.55
143	3.00	SW-LNR-CH1	Lenel Network Video Recorder Software - Includes a single channel software license for one IP/ Network based camera channel to be used with either a customer provided PC or adding on to a turnkey system. The customer provided PC must meet or exceed the Minimum DVC-SX PC Configuration requirements listed above (maximum of 63 IP/network channels per recorder based on video resolution, frame rate, quality and processing options being utilized)	$ 204.00	$ 612.00
144	0.30	665610-110DB	24-4P Unshielded Solid PE Cat5E Blk Jkt Direct-Burial	$ 283.77	$ 85.13
145	Spots 8-10				

Line	Qty	Part	Description	Unit Price	Extended Price
146	1.00	AXIS Q3709-PVE	Multi-sensor, day/night fixed dome in an IK10 vandal-resistant outdoor casing. Fixed focal, multi-megapixel lenses, focused from factory. Multiple, individually configurable H.264 and Motion JPEG streams; high-quality 4K video in 30 fps from each of 3 sensors and up to 33 MP resolution in total, together providing a 180º view. Video motion detection and active tampering alarm. Operation in wide temperature range powered by standard Power over Ethernet Plus. Midspan not included. Designed for pendant or wall mount arm with same bayonet joint interface as Axis' PTZ domes. Includes weather shield against sun, rain or snow, easily repaintable to blend in with the environment.	$ 2,279.12	$ 2,279.12
147	1.00	Z4-5801721	T91L61 WALL-AND-POLE MOUN	$ 94.05	$ 94.05
148	1.00	Z4-5901391	T91G61/T91L61 SCREW KIT	$ 9.50	$ 9.50
149	1.00	AXIS P33XX-VE ¾" NPS ADAPT 5503-131	Stainless steel adapter used for mounting 3/4" NPS or NPT pipes to AXIS P33XX-VE cameras for cable protection.	$ 27.55	$ 27.55
150	3.00	SW-LNR-CH1	Lenel Network Video Recorder Software - Includes a single channel software license for one IP/ Network based camera channel to be used with either a customer provided PC or adding on to a turnkey system. The customer provided PC must meet or exceed the Minimum DVC-SX PC Configuration requirements listed above (maximum of 63 IP/network channels per recorder based on video resolution, frame rate, quality and processing options being utilized)	$ 204.00	$ 612.00
151	Trash Enclosure				
152	1.00	AXIS P3375-LVE	Day/night fixed dome with support for WDR-Forensic Capture, Lightfinder and OptimizedIR with built-in IR illumination. IK10 vandal-resistant outdoor casing. Varifocal 3 – 10 mm P-Iris lens with remote zoom and focus. Multiple, individually configurable H.264 and Motion JPEG streams. HDTV 1080p at 30 fps with WDR, and up to 60 fps with WDR disabled. Zipstream for reduced bandwidth and storage. Video motion detection and active tampering alarm. Two-way audio and audio detection. Supervised input / digital output for alarm / event handling. Memory card slot for optional local video storage. Operation in -40 ºC to 55 ºC (-40 ºF to 131 ºF) powered by standard Power over Ethernet. Midspan not included. Includes mounting bracket for wall or junction boxes and weather shield against sun, rain or snow.	$ 949.08	$ 949.08
153	1.00	5700-341	DOME KIT 4 AXIS P33-VE SERIESCLEAR BUBBLE, MOUNTED ON ANALUMINIUM DOME	$ 65.55	$ 65.55
154	1.00	Z4-5504821	T91D61 WALL MOUNT	$ 79.80	$ 79.80

Line	Qty	Part	Description	Unit Price	Extended Price
155	1.00	AXIS P33XX-VE ¾" NPS ADAPT 5503-131	Stainless steel adapter used for mounting 3/4" NPS or NPT pipes to AXIS P33XX-VE cameras for cable protection.	$ 27.55	$ 27.55
156	1.00	SW-LNR-CH1	Lenel Network Video Recorder Software - Includes a single channel software license for one IP/ Network based camera channel to be used with either a customer provided PC or adding on to a turnkey system. The customer provided PC must meet or exceed the Minimum DVC-SX PC Configuration requirements listed above (maximum of 63 IP/network channels per recorder based on video resolution, frame rate, quality and processing options being utilized)	$ 204.00	$ 204.00
157	Transmitter Site PTZ				
158	1.00	Z4-01442004	Q6215-LE 60HZ US	$ 3,324.15	$ 3,324.15
159	1.00	AXIS T8133 30W MIDSPAN 5900-294	Single port midspan for Power over Ethernet Plus (PoE+) IEEE 802.3at Type 2 Class 4. Replaces AXIS T8123.	$ 75.05	$ 75.05
160	1.00	SW-LNR-CH1	Lenel Network Video Recorder Software - Includes a single channel software license for one IP/ Network based camera channel to be used with either a customer provided PC or adding on to a turnkey system. The customer provided PC must meet or exceed the Minimum DVC-SX PC Configuration requirements listed above (maximum of 63 IP/network channels per recorder based on video resolution, frame rate, quality and processing options being utilized)	$ 204.00	$ 204.00
161	--Baggage Claim--				
162	Baggage Claim East				
163	1.00	AXIS Q3709-PVE	Multi-sensor, day/night fixed dome in an IK10 vandal-resistant outdoor casing. Fixed focal, multi-megapixel lenses, focused from factory. Multiple, individually configurable H.264 and Motion JPEG streams; high-quality 4K video in 30 fps from each of 3 sensors and up to 33 MP resolution in total, together providing a 180º view. Video motion detection and active tampering alarm. Operation in wide temperature range powered by standard Power over Ethernet Plus. Midspan not included. Designed for pendant or wall mount arm with same bayonet joint interface as Axis' PTZ domes. Includes weather shield against sun, rain or snow, easily repaintable to blend in with the environment.	$ 2,279.12	$ 2,279.12
164	1.00	AXIS T94A01D PENDANT KIT	Pendant kit for the AXIS Q60-series and AXIS P55-series PTZ Network Cameras, enables mount on standard '1,5" NPT threaded brackets. White.	$ 46.55	$ 46.55
165	1.00	Z4-5507461	T91B51 CEILING MOUNT	$ 113.05	$ 113.05

Line	Qty	Part	Description	Unit Price	Extended Price
166	3.00	SW-LNR-CH1	Lenel Network Video Recorder Software - Includes a single channel software license for one IP/ Network based camera channel to be used with either a customer provided PC or adding on to a turnkey system. The customer provided PC must meet or exceed the Minimum DVC-SX PC Configuration requirements listed above (maximum of 63 IP/network channels per recorder based on video resolution, frame rate, quality and processing options being utilized)	$ 204.00	$ 612.00
167	0.10	665610-110DB	24-4P Unshielded Solid PE Cat5E Blk Jkt Direct-Burial	$ 283.77	$ 28.38
168	Baggage Claim West				
169	1.00	AXIS Q3709-PVE	Multi-sensor, day/night fixed dome in an IK10 vandal-resistant outdoor casing. Fixed focal, multi-megapixel lenses, focused from factory. Multiple, individually configurable H.264 and Motion JPEG streams; high-quality 4K video in 30 fps from each of 3 sensors and up to 33 MP resolution in total, together providing a 180º view. Video motion detection and active tampering alarm. Operation in wide temperature range powered by standard Power over Ethernet Plus. Midspan not included. Designed for pendant or wall mount arm with same bayonet joint interface as Axis' PTZ domes. Includes weather shield against sun, rain or snow, easily repaintable to blend in with the environment.	$ 2,279.12	$ 2,279.12
170	1.00	AXIS T94A01D PENDANT KIT	Pendant kit for the AXIS Q60-series and AXIS P55-series PTZ Network Cameras, enables mount on standard '1,5" NPT threaded brackets. White.	$ 46.55	$ 46.55
171	1.00	Z4-5507461	T91B51 CEILING MOUNT	$ 113.05	$ 113.05
172	3.00	SW-LNR-CH1	Lenel Network Video Recorder Software - Includes a single channel software license for one IP/ Network based camera channel to be used with either a customer provided PC or adding on to a turnkey system. The customer provided PC must meet or exceed the Minimum DVC-SX PC Configuration requirements listed above (maximum of 63 IP/network channels per recorder based on video resolution, frame rate, quality and processing options being utilized)	$ 204.00	$ 612.00
173	0.20	665610-110DB	24-4P Unshielded Solid PE Cat5E Blk Jkt Direct-Burial	$ 283.77	$ 56.75
174	Terminal High Bay				

Line	Qty	Part	Description	Unit Price	Extended Price
175	1.00	AXIS Q3709-PVE	Multi-sensor, day/night fixed dome in an IK10 vandal-resistant outdoor casing. Fixed focal, multi-megapixel lenses, focused from factory. Multiple, individually configurable H.264 and Motion JPEG streams; high-quality 4K video in 30 fps from each of 3 sensors and up to 33 MP resolution in total, together providing a 180º view. Video motion detection and active tampering alarm. Operation in wide temperature range powered by standard Power over Ethernet Plus. Midspan not included. Designed for pendant or wall mount arm with same bayonet joint interface as Axis' PTZ domes. Includes weather shield against sun, rain or snow, easily repaintable to blend in with the environment.	$ 2,279.12	$ 2,279.12
176	1.00	AXIS T94A01D PENDANT KIT	Pendant kit for the AXIS Q60-series and AXIS P55-series PTZ Network Cameras, enables mount on standard '1,5" NPT threaded brackets. White.	$ 46.55	$ 46.55
177	1.00	Z4-5507461	T91B51 CEILING MOUNT	$ 113.05	$ 113.05
178	3.00	SW-LNR-CH1	Lenel Network Video Recorder Software - Includes a single channel software license for one IP/ Network based camera channel to be used with either a customer provided PC or adding on to a turnkey system. The customer provided PC must meet or exceed the Minimum DVC-SX PC Configuration requirements listed above (maximum of 63 IP/network channels per recorder based on video resolution, frame rate, quality and processing options being utilized)	$ 204.00	$ 612.00
179	0.20	665610-110DB	24-4P Unshielded Solid PE Cat5E Blk Jkt Direct-Burial	$ 283.77	$ 56.75
180	--Land Side--				
181	Arrivals Sidewalk North				
182	1.00	AXIS Q3709-PVE	Multi-sensor, day/night fixed dome in an IK10 vandal-resistant outdoor casing. Fixed focal, multi-megapixel lenses, focused from factory. Multiple, individually configurable H.264 and Motion JPEG streams; high-quality 4K video in 30 fps from each of 3 sensors and up to 33 MP resolution in total, together providing a 180º view. Video motion detection and active tampering alarm. Operation in wide temperature range powered by standard Power over Ethernet Plus. Midspan not included. Designed for pendant or wall mount arm with same bayonet joint interface as Axis' PTZ domes. Includes weather shield against sun, rain or snow, easily repaintable to blend in with the environment.	$ 2,279.12	$ 2,279.12
183	1.00	Z4-5801721	T91L61 WALL-AND-POLE MOUN	$ 94.05	$ 94.05
184	1.00	Z4-5901391	T91G61/T91L61 SCREW KIT	$ 9.50	$ 9.50

Line	Qty	Part	Description	Unit Price	Extended Price
185	1.00	AXIS P33XX-VE ¾" NPS ADAPT 5503-131	Stainless steel adapter used for mounting 3/4" NPS or NPT pipes to AXIS P33XX-VE cameras for cable protection.	$ 27.55	$ 27.55
186	3.00	SW-LNR-CH1	Lenel Network Video Recorder Software - Includes a single channel software license for one IP/ Network based camera channel to be used with either a customer provided PC or adding on to a turnkey system. The customer provided PC must meet or exceed the Minimum DVC-SX PC Configuration requirements listed above (maximum of 63 IP/network channels per recorder based on video resolution, frame rate, quality and processing options being utilized)	$ 204.00	$ 612.00
187	Arrivals Sidewalk South				
188	1.00	AXIS Q3709-PVE	Multi-sensor, day/night fixed dome in an IK10 vandal-resistant outdoor casing. Fixed focal, multi-megapixel lenses, focused from factory. Multiple, individually configurable H.264 and Motion JPEG streams; high-quality 4K video in 30 fps from each of 3 sensors and up to 33 MP resolution in total, together providing a 180º view. Video motion detection and active tampering alarm. Operation in wide temperature range powered by standard Power over Ethernet Plus. Midspan not included. Designed for pendant or wall mount arm with same bayonet joint interface as Axis' PTZ domes. Includes weather shield against sun, rain or snow, easily repaintable to blend in with the environment.	$ 2,279.12	$ 2,279.12
189	1.00	Z4-5801721	T91L61 WALL-AND-POLE MOUN	$ 94.05	$ 94.05
190	1.00	Z4-5901391	T91G61/T91L61 SCREW KIT	$ 9.50	$ 9.50
191	1.00	AXIS P33XX-VE ¾" NPS ADAPT 5503-131	Stainless steel adapter used for mounting 3/4" NPS or NPT pipes to AXIS P33XX-VE cameras for cable protection.	$ 27.55	$ 27.55
192	3.00	SW-LNR-CH1	Lenel Network Video Recorder Software - Includes a single channel software license for one IP/ Network based camera channel to be used with either a customer provided PC or adding on to a turnkey system. The customer provided PC must meet or exceed the Minimum DVC-SX PC Configuration requirements listed above (maximum of 63 IP/network channels per recorder based on video resolution, frame rate, quality and processing options being utilized)	$ 204.00	$ 612.00
193	Departures Curb Line South				

Line	Qty	Part	Description	Unit Price	Extended Price
194	1.00	AXIS Q3515-LVE 22MM	Day/night fixed dome with support for Forensic WDR, Lightfinder and OptimizedIR illumination. IK10+ vandal-resistant outdoor casing. Varifocal 9-22 mm P-Iris lens with remote zoom and focus for installation or monitoring. Multiple, individually configurable H.264 and Motion JPEG streams. 1080p at 30 fps with WDR and Lightfinder, and up to 120 fps without. Zipstream for reduced bandwidth and storage. Fence Guard, Motion Guard, Video motion detection, shock detection and active tampering alarm. Two-way audio and audio detection. Supervised inputs / digital outputs for alarm / event handling. Electronic image stabilization. Memory card slot for optional local video storage. Operation in -50 ºC to 60 ºC (-58 ºF to 140 ºF) powered by standard Power over Ethernet or 8-28V DC power with redundancy. Midspan and power supply not included. Includes mounting bracket for wall or junction boxes and weather shield against sun, rain or snow.	$ 996.58	$ 996.58
195	1.00	AXIS T94V01C DUAL CAMERA MOUNT 01457-001	AXIS T94V01C Dual Camera Mount allows back-to-back installation of two Axis cameras for panoramic coverage. Compatible with a wide range of Axis dome cameras, box cameras, and bullet cameras. Compatible with Axis mounting accessories with 1.5” NPS threaded interface, for mounting on walls, poles, and under ceilings. AXIS T94V01C is IK10 rated for impact resistance, which safeguards it against vandalism. Suitable for both indoor and outdoor use. Note: To ensure physical stability, do not use AXIS T94VO1C for single camera installations.	$ 94.05	$ 94.05
196	1.00	AXIS T91B50 TELESCOPIC CEIL MNT 5507-451	Indoor/outdoor telescopic ceiling mount. Expands between 1 m (39") and 2 m (79"). Features a swivel action to prevent breaking if hit by forklifs or high vehicles. Can be mounted on a sloped ceiling. Accessory extension pipes (Not included) for a maximum lengh of 5 m (197"). Compatible with all Axis pendant kits featuring a 1,5” NPS thread and the AXIS T91A05 Camera holder for fixed cameras.	$ 189.06	$ 189.06
197	1.00	Z4-5026204	T8120 1-PORT POE MID INJECTOR	$ 56.05	$ 56.05
198	1.00	SW-LNR-CH1	Lenel Network Video Recorder Software - Includes a single channel software license for one IP/ Network based camera channel to be used with either a customer provided PC or adding on to a turnkey system. The customer provided PC must meet or exceed the Minimum DVC-SX PC Configuration requirements listed above (maximum of 63 IP/network channels per recorder based on video resolution, frame rate, quality and processing options being utilized)	$ 204.00	$ 204.00
199	0.10	665610-110DB	24-4P Unshielded Solid PE Cat5E Blk Jkt Direct-Burial	$ 283.77	$ 28.38

Line	Qty	Part	Description	Unit Price	Extended Price
200	Departures Curb Line North				
201	1.00	AXIS Q1798-LE 01702-001	Robust outdoor, NEMA 4X, IP66/67 and IK10-rated 10 MP/ 4K, day/night, fixed bullet camera providing Forensic WDR and Lightfinder 2.0 technology. Features a 4/3" type image sensor, built-in varifocal 12–48 mm, 4 x optical Canon zoom lens, 90°-21° HFOV, F1.7 with remote zoom and autofocus. Multiple, individually configurable H.264, H.265 and Motion JPEG streams; max 4K at 30 fps /10MP resolution at 20 fps. Axis Zipstream technology for reduced bandwidth and storage needs. Includes analytics AXIS Guard Suite, Video motion detection, shock detection and active tampering alarm. Corridor format, barrel distortion correction, defogging and electronic image stabilization. Scene profiles. Audio mic/line in, audio detection with optional analog or digital microphone. Supervised I/O for alarm/event handling. MicroSD/MicroSDHC memory card slot for optional local video storage. OptimizedIR, a power-efficient IR LED technology. Integrated bracket for easy mounting on wall and ceiling. Operation in -40°C to +60°C (-40 °F to 140 °F). Powered by PoE class 4 (IEEE 802-3at), 20-28 V DC or 20-24 V AC. Includes a removable sunshield, Torx T20 allen key, IP66/67- rated cable glands and optional IDC punch connector. Power supply or midspan not included.	$ 1,709.10	$ 1,709.10
202	1.00	Z4-01164001	T91B47 100-410MM-POLE MNT	$ 80.75	$ 80.75
203	1.00	AXIS T94S01P CONDUIT BACK BOX 01190-001	Outdoor-ready, impact resistant (IK10+) back box with sealed compartment (IP66/67) for secure storage of connectivity devices. 3/4" / M25 conduit interface from both side and back. Can be mounted directly behind a wide range of Axis network cameras. Includes a network cable and extra gaskets.	$ 113.05	$ 113.05
204	1.00	AXIS P33XX-VE ¾" NPS ADAPT 5503-131	Stainless steel adapter used for mounting 3/4" NPS or NPT pipes to AXIS P33XX-VE cameras for cable protection.	$ 27.55	$ 27.55
205	1.00	AXIS T8133 30W MIDSPAN 5900-294	Single port midspan for Power over Ethernet Plus (PoE+) IEEE 802.3at Type 2 Class 4. Replaces AXIS T8123.	$ 75.05	$ 75.05
206	1.00	SW-LNR-CH1	Lenel Network Video Recorder Software - Includes a single channel software license for one IP/ Network based camera channel to be used with either a customer provided PC or adding on to a turnkey system. The customer provided PC must meet or exceed the Minimum DVC-SX PC Configuration requirements listed above (maximum of 63 IP/network channels per recorder based on video resolution, frame rate, quality and processing options being utilized)	$ 204.00	$ 204.00
207	Terminal Roadway PTZ				

Line	Qty	Part	Description	Unit Price	Extended Price
208	1.00	Z4-01234004	Q6125LE/2MP/PTZ/IR/X30/IP66	$ 2,849.13	$ 2,849.13
209	1.00	Z4-5506951	T91G61 WALL MOUNT	$ 189.06	$ 189.06
210	1.00	Z4-01470001	T91B57 POLE MNT 100-410MM	$ 109.25	$ 109.25
211	1.00	Z4-5901391	T91G61/T91L61 SCREW KIT	$ 9.50	$ 9.50
212	1.00	AXIS P33XX-VE ¾" NPS ADAPT 5503-131	Stainless steel adapter used for mounting 3/4" NPS or NPT pipes to AXIS P33XX-VE cameras for cable protection.	$ 27.55	$ 27.55
213	1.00	AXIS T8133 30W MIDSPAN 5900-294	Single port midspan for Power over Ethernet Plus (PoE+) IEEE 802.3at Type 2 Class 4. Replaces AXIS T8123.	$ 75.05	$ 75.05
214	1.00	SW-LNR-CH1	Lenel Network Video Recorder Software - Includes a single channel software license for one IP/ Network based camera channel to be used with either a customer provided PC or adding on to a turnkey system. The customer provided PC must meet or exceed the Minimum DVC-SX PC Configuration requirements listed above (maximum of 63 IP/network channels per recorder based on video resolution, frame rate, quality and processing options being utilized)	$ 204.00	$ 204.00
215	0.30	665610-110DB	24-4P Unshielded Solid PE Cat5E Blk Jkt Direct-Burial	$ 283.77	$ 85.13
216	--Ticketing Non-Secure--				
217	Courtyard Access				
218	1.00	AXIS P3374-V 01056-001	Day/night fixed dome with support for WDR-Forensic Capture and Lightfinder. Discreet, IK10 vandal-resistant indoor casing. Varifocal 3 – 10 mm P-Iris lens with remote zoom and focus. Multiple, individually configurable H.264 and Motion JPEG streams. HDTV 720p at 30 fps with WDR, and up to 60 fps with WDR disabled. Zipstream for reduced bandwidth and storage. Video motion detection and active tampering alarm. Two-way audio and audio detection. Supervised input / digital output for alarm / event handling. Memory card slot for optional local video storage. Power over Ethernet, midspan not included.	$ 569.07	$ 569.07
219	1.00	SW-LNR-CH1	Lenel Network Video Recorder Software - Includes a single channel software license for one IP/ Network based camera channel to be used with either a customer provided PC or adding on to a turnkey system. The customer provided PC must meet or exceed the Minimum DVC-SX PC Configuration requirements listed above (maximum of 63 IP/network channels per recorder based on video resolution, frame rate, quality and processing options being utilized)	$ 204.00	$ 204.00
220	Door A				

Line	Qty	Part	Description	Unit Price	Extended Price
221	1.00	AXIS Q3709-PVE	Multi-sensor, day/night fixed dome in an IK10 vandal-resistant outdoor casing. Fixed focal, multi-megapixel lenses, focused from factory. Multiple, individually configurable H.264 and Motion JPEG streams; high-quality 4K video in 30 fps from each of 3 sensors and up to 33 MP resolution in total, together providing a 180º view. Video motion detection and active tampering alarm. Operation in wide temperature range powered by standard Power over Ethernet Plus. Midspan not included. Designed for pendant or wall mount arm with same bayonet joint interface as Axis' PTZ domes. Includes weather shield against sun, rain or snow, easily repaintable to blend in with the environment.	$ 2,279.12	$ 2,279.12
222	1.00	AXIS T94A01D PENDANT KIT	Pendant kit for the AXIS Q60-series and AXIS P55-series PTZ Network Cameras, enables mount on standard '1,5" NPT threaded brackets. White.	$ 46.55	$ 46.55
223	1.00	Z4-5507461	T91B51 CEILING MOUNT	$ 113.05	$ 113.05
224	1.00	AXIS T8133 30W MIDSPAN 5900-294	Single port midspan for Power over Ethernet Plus (PoE+) IEEE 802.3at Type 2 Class 4. Replaces AXIS T8123.	$ 75.05	$ 75.05
225	3.00	SW-LNR-CH1	Lenel Network Video Recorder Software - Includes a single channel software license for one IP/ Network based camera channel to be used with either a customer provided PC or adding on to a turnkey system. The customer provided PC must meet or exceed the Minimum DVC-SX PC Configuration requirements listed above (maximum of 63 IP/network channels per recorder based on video resolution, frame rate, quality and processing options being utilized)	$ 204.00	$ 612.00
226	0.10	665610-110DB	24-4P Unshielded Solid PE Cat5E Blk Jkt Direct-Burial	$ 283.77	$ 28.38
227	Door C				
228	1.00	AXIS Q3709-PVE	Multi-sensor, day/night fixed dome in an IK10 vandal-resistant outdoor casing. Fixed focal, multi-megapixel lenses, focused from factory. Multiple, individually configurable H.264 and Motion JPEG streams; high-quality 4K video in 30 fps from each of 3 sensors and up to 33 MP resolution in total, together providing a 180º view. Video motion detection and active tampering alarm. Operation in wide temperature range powered by standard Power over Ethernet Plus. Midspan not included. Designed for pendant or wall mount arm with same bayonet joint interface as Axis' PTZ domes. Includes weather shield against sun, rain or snow, easily repaintable to blend in with the environment.	$ 2,279.12	$ 2,279.12
229	1.00	AXIS T94A01D PENDANT KIT	Pendant kit for the AXIS Q60-series and AXIS P55-series PTZ Network Cameras, enables mount on standard '1,5" NPT threaded brackets. White.	$ 46.55	$ 46.55

Line	Qty	Part	Description	Unit Price	Extended Price
230	1.00	Z4-5507461	T91B51 CEILING MOUNT	$ 113.05	$ 113.05
231	1.00	AXIS T8133 30W MIDSPAN 5900-294	Single port midspan for Power over Ethernet Plus (PoE+) IEEE 802.3at Type 2 Class 4. Replaces AXIS T8123.	$ 75.05	$ 75.05
232	3.00	SW-LNR-CH1	Lenel Network Video Recorder Software - Includes a single channel software license for one IP/ Network based camera channel to be used with either a customer provided PC or adding on to a turnkey system. The customer provided PC must meet or exceed the Minimum DVC-SX PC Configuration requirements listed above (maximum of 63 IP/network channels per recorder based on video resolution, frame rate, quality and processing options being utilized)	$ 204.00	$ 612.00
233	0.20	665610-110DB	24-4P Unshielded Solid PE Cat5E Blk Jkt Direct-Burial	$ 283.77	$ 56.75
234	Ticketing South				
235	1.00	AXIS Q3709-PVE	Multi-sensor, day/night fixed dome in an IK10 vandal-resistant outdoor casing. Fixed focal, multi-megapixel lenses, focused from factory. Multiple, individually configurable H.264 and Motion JPEG streams; high-quality 4K video in 30 fps from each of 3 sensors and up to 33 MP resolution in total, together providing a 180º view. Video motion detection and active tampering alarm. Operation in wide temperature range powered by standard Power over Ethernet Plus. Midspan not included. Designed for pendant or wall mount arm with same bayonet joint interface as Axis' PTZ domes. Includes weather shield against sun, rain or snow, easily repaintable to blend in with the environment.	$ 2,279.12	$ 2,279.12
236	1.00	AXIS T94A01D PENDANT KIT	Pendant kit for the AXIS Q60-series and AXIS P55-series PTZ Network Cameras, enables mount on standard '1,5" NPT threaded brackets. White.	$ 46.55	$ 46.55
237	1.00	Z4-5507461	T91B51 CEILING MOUNT	$ 113.05	$ 113.05
238	1.00	AXIS T8133 30W MIDSPAN 5900-294	Single port midspan for Power over Ethernet Plus (PoE+) IEEE 802.3at Type 2 Class 4. Replaces AXIS T8123.	$ 75.05	$ 75.05
239	3.00	SW-LNR-CH1	Lenel Network Video Recorder Software - Includes a single channel software license for one IP/ Network based camera channel to be used with either a customer provided PC or adding on to a turnkey system. The customer provided PC must meet or exceed the Minimum DVC-SX PC Configuration requirements listed above (maximum of 63 IP/network channels per recorder based on video resolution, frame rate, quality and processing options being utilized)	$ 204.00	$ 612.00
240	0.20	665610-110DB	24-4P Unshielded Solid PE Cat5E Blk Jkt Direct-Burial	$ 283.77	$ 56.75

Line	Qty	Part	Description	Unit Price	Extended Price
241	Open Market Items				
242	1.00	MISC	Wire Hangers/Rods/Conduit/Connectors/Misc. Materials	$ 2,853.33	$ 2,853.33
243	Labor was Quoted IAW Sourcewell Contract No.: 031517-CTL				
244	1.00	5700-341	DOME KIT 4 AXIS P33-VE SERIESCLEAR BUBBLE, MOUNTED ON ANALUMINIUM DOME	$ 65.55	$ 65.55
245	1.00	5700-341	DOME KIT 4 AXIS P33-VE SERIESCLEAR BUBBLE, MOUNTED ON ANALUMINIUM DOME	$ 65.55	$ 65.55

Equipment Total	$ 89,077.02
Program Manager	$ 0.00
Professional Services	$ 0.00
Project Management	$ 8,657.04
Specialist-Programming	$ 5,044.40
Specialist-Testing	$ 2,017.76
Installation-Foreman	$ 13,619.88
Installation	$ 13,115.44
Engineering	$ 0.00
Drafting/CAD	$ 4,068.40
Subcontractors/Other Costs	$ 2,161.62
Freight/Warranty	$ 13,629.40
Total Project Price	$ 151,390.96

Clarifications and Exclusion

1. All work proposed herein, shall be performed during normal business hours Monday through Friday 8:00 am - 5:00 pm.
2. Low voltage wiring shall be installed via open air code approved methods.
3. Provision or installation of conduit, wire, boxes, fittings or other electrical installation materials unless specifically listed under Inclusions or Bill of Materials.
4. Permits or associated fees are not included.
5. Customer to provide static IP addresses and network connections at panel locations.
6. Customer to provide a secured staging & storage area for project related materials.
7. Pricing assumes that electronic Auto CAD files are available from customer for our use in creating submittal drawings.
8. Twenty-Five percent (25%) of the proposed sell price shall be payable to Convergint Technologies for project mobilization. Mobilization shall be invoiced and due upon customer acceptance of this proposal.
9. Proposal does not include Sales Tax unless otherwise noted. Any applicable Use Tax where necessary is included as a cost to Convergint.
10. Anything in the Contract Documents notwithstanding, in no event shall either Contractor or Subcontractor be liable for special, indirect, incidental or consequential damages, including commercial loss, loss of use, or lost profits, even if either party has been advised of the possibility of such damages.
11. Convergint Technologies reserves the right to negotiate mutually acceptable contract terms and conditions with customer by making mutually agreeable changes to the formal contract included in the Bid Documents.

Performance Items

Items Included	
Attend Owner Project Meetings	Cable
Floor plan with device placement and numbering (requires customer CAD)	Installation of CCTV Cameras
Installation of Low Voltage Wire	Installation of Network Cabling to IP Cameras
Lifts	Material (listed in the BOM)
One-Year Warranty on Labor	One-Year Warranty on Parts
Owner to Provide Static IP Addresses	Project Management
Record Documentation (As-Built)	Servers by Others
System is Design-Build	System Programming
Testing of all Proposed Devices	Workstations by Others

Items Excluded	
120 VAC Power and Fused Disconnect Switch	120 VAC Power Receptacles
Additional Lighting Requirements for Cameras	Applicable Taxes
Attend General Contractor Project Meetings	Authority having Jurisdiction permit drawing (requires customer CAD)
Ceiling Tiles and Ceiling Grid Repairs	Connection to Building Fire Alarm Panel
Correction of Wiring Faults Caused by Others	Door wiring typical connections
Electrical Installation Permit	Electrified Door Locking Hardware
Engineering and Drawings	Equipment rack layout drawing
FA Permit and Plan Review Fees	Fire Stopping (Excludes Existing Penetrations)
Fire Watch	Floor Coverings for Lifts
Freight (prepaid)	Horizontal Core Drilling
Installation of Bridle Rings	Installation of Conduit, Boxes and Fittings
Installation of Control Equipment Enclosures	Installation of Control Panels
Installation of Intercom Systems	Installation of Intrusion Panels
Installation of Network Cabling to Card Readers	Installation of Network Cabling to IP Intercoms
Installation of Specialty Backboxes	Installation of Terminal Cabinets
Installation of Video Recorders (DVR/NVR)	Installation of Wire and Cable
Installation of Wire Hangars	Loading Software on Customer Provided Computer
Low Voltage Permits	Mounting/Termination of Proposed Devices
On-Site Lockable Storage Facility	Operations & Maintenance Manuals
Owner to Provide DHCP Lease Reservations for Network Connected Devices	Owner Training
Panel Wall Elevation drawing (may require customer CAD)	Panel wiring point with to point connections
Patch and Paint	Payment & Performance Bonds
Riser drawing with home run wiring	Servers by Convergint
Specialty Backboxes	Submittal Drawings
System Engineering	System Meets Plans/Drawings
Terminal Cabinets	Termination of Control Equipment Enclosures
Vertical Core Drilling	Wire
Workstations by Convergint	

Total Project Investment: **$ 151,390.96**

Thank you for considering Convergint Technologies for your Security needs. If you have any questions or would like additional information, please don't hesitate to contact me immediately. If you would like to proceed with the scope of work as outlined in this proposal, please sign below and return to my attention.

Sincerely,

Allen McLeod
Convergint Technologies
Allen McLeod

By signing below, I accept this proposal and agree to the Terms and Conditions contained herein

Ivan Smith	
Customer Name (Printed)	Date
Authorized Signature	Title

Throughout this Installation Proposal, the term, "Convergint" refers to the Convergint Technologies' affiliate operating in the state/province in which the work is being performed, specifically, "Convergint Technologies LLC" or "Convergint Technologies LTD".

SECTION 1. THE WORK

This Installation Proposal takes precedence over and supersedes any and all prior proposals, correspondence, and oral agreements or representations relating to the work set forth in the attached scope of work ("Work"). This Installation Proposal commences on the Start Date as specified in the attached scope of work, and represents the entire agreement between Convergint and Customer (the "Agreement") and it may only be amended by a written document signed by both Convergint and Customer. In the event any provision of this Agreement is held to be invalid or unenforceable, the remaining provisions of this Agreement shall remain in full force.

Convergint agrees in accordance with the mutually agreed project schedule:

a. To submit shop drawings, product data, samples and similar submittals if required in performing the Work;
b. To pay for all labor, materials, equipment, tools, supervision, programming, testing, startup and documentation required to perform the Work in accordance with the Agreement;
c. Secure and pay for permits and governmental fees, licenses and inspections necessary for proper execution and completion of the Work; and
d. Hire subcontractors and order material to perform part of the Work, if necessary, while remaining responsible for the completion of the Work.

Customer agrees in accordance with the mutually agreed project schedule, and at no cost to Convergint:

a. To promptly approve submittals provided by Convergint;
b. To provide access to all areas of the facility which are necessary to complete the Work;
c. To supply suitable electrical service as required by Convergint; and
d. That in the event of any emergency or systems failure, reasonable safety precautions will be taken by Customer to protect life and property during the period of time from when Convergint is first notified of the emergency or failure and until such time that Convergint notifies the Customer that the systems are operational or that the emergency has cleared.

SECTION 2. PRICING

Pricing and amounts proposed shall remain valid for 30 days unless otherwise specified. Price includes only the material listed based on Convergint's interpretation of plans and specifications unless noted otherwise. Additional equipment, unless negotiated prior to order placement, will be billed accordingly. Sales taxes, (and in Canada GST/PST) and any other taxes assessed on Customer shall be added to the price upon invoice to Customer.

SECTION 3. INVOICE REMITTANCE AND PAYMENT

Customer agrees to pay Convergint twenty-five (25%) percent of the total price as a mobilization fee at the time of executing this Agreement.

If the Work is performed over more than a month, Convergint will invoice Customer each month for the Work performed during the previous month. Customer agrees to pay the amount due to Convergint as invoiced, within thirty (30) days of the date of such invoice. If the Work is completed in less than one month, Customer agrees to pay Convergint in full after the Work has been performed within thirty (30) days of the date of being invoiced. Invoices shall not include or be subject to a project retention percentage. If Customer is overdue in any payment to Convergint, Convergint shall be entitled to suspend the Work until paid, and charge Customer an interest rate 1 and 1/2% percent per month, (or the maximum rate permitted by law), and may avail itself of any other legal or equitable remedy. Customer shall reimburse Convergint costs incurred in collecting any amounts that become overdue, including attorney fees, court costs and any other reasonable expenditure.

SECTION 4. WARRANTY

Convergint provides the following warranty to the Customer:

For the period of one (1) year, commencing at the earlier of substantial completion of the Work, or first beneficial use, ("Warranty Period"):

a. That Work performed under this Agreement will be of good quality;
b. That all equipment will be new unless otherwise required or permitted by this Agreement;
c. That the Work will be free from defects not inherent in the quality required or permitted; and
d. That the Work will conform to the requirements of this Agreement.

The Customer's sole remedy for any breach of this warranty is that Convergint shall remove, replace and/or repair at its own expense any defective or improper Work, discovered within the Warranty Period, provided Convergint is notified in writing of any defect within the Warranty Period.

Any equipment or products installed by Convergint in the course of performing the Work hereunder shall only carry such warranty as is provided by the manufacturer thereof, which Convergint hereby assigns to Customer without recourse to Convergint. Upon request of Customer, Convergint will use all reasonable efforts to assist Customer in enforcing any such third party warranties. This warranty excludes remedy for damage or defect caused by abuse, modifications not executed by Convergint, improper or insufficient maintenance, improper operation, or normal wear and tear under normal usage. NO FURTHER WARRANTIES OR GUARANTIES, EXPRESS OR IMPLIED, ARE MADE WITH RESPECT TO ANY GOODS OR SERVICES PROVIDED UNDER THIS AGREEMENT, AND ANY IMPLIED WARRANTIES OF MERCHANTABILITY OR FITNESS FOR A PARTICULAR PURPOSE ARE EXPRESSLY DISCLAIMED.

SECTION 5. CHANGES

Without invalidating this Agreement or any bond given hereunder, Customer or Convergint may request changes in the Work. Any changes to the Work and any adjustment to the Agreement Price or the time for completion of the Work shall be in writing signed by both Customer and Convergint. If Customer orders any additional work or causes any material interference with Convergint's performance of the Work, Convergint shall be entitled to an equitable adjustment in the time for performance and in the Agreement Price, including a reasonable allowance for overhead and profit.

SECTION 6. FORCE MAJEURE

Neither Customer nor Convergint shall be responsible or liable for, shall incur expense for, or be deemed to be in breach of this Agreement because of any delay in the performance of their respective obligations pursuant to this Agreement due solely to circumstances beyond their reasonable control ("Force Majeure") and without the fault or negligence of the party experiencing such delay, provided that the party experiencing the delay shall promptly give written notification to the other party within five (5) days after such party has learned of the Force Majeure. A Force Majeure event shall include, but not be limited to: accident, fire, storm, water, flooding, negligence, vandalism, power failure, installation of incompatible equipment, improper operating procedures, source current fluctuations or lighting. If performance by either party is delayed due to Force Majeure, the time for that performance shall be extended for a period of time reasonably necessary to overcome the effect of the delay. Any Services required by Convergint due to reasons set forth in this Force Majeure Section shall be charged to Customer in addition to any amounts due under this Agreement.

SECTION 7. INSURANCE

Convergint shall have the following insurance coverage during the term of this Agreement, and shall provide certificates of insurance to the Customer prior to beginning work hereunder:

Worker's Compensation	Statutory Limits
Employer's Liability	$1,000,000 per occurrence /aggregate
Commercial General Liability	$1,000,000 per occurrence/aggregate $2,000,000 general aggregate
Automobile Liability	$1,000,000 per occurrence/aggregate
Excess/Umbrella Liability	$4,000,000 per occurrence/aggregate

All insurance policies carried by Convergint hereunder shall be primary to and noncontributory with the insurance afforded to Customer, and shall name the Customer as "additional insured", with respect to liability arising out of work performed by Convergint, as applicable, but only to the extent of liabilities falling within the indemnity obligations of Convergint, pursuant to the terms of this Agreement. Convergint shall provide to the Customer no less than thirty (30) days notice prior to the termination or cancellation of any such insurance policy.

SECTION 8. INDEMNIFICATION

Convergint shall indemnify and hold Customer harmless from and against claims, damages, losses and expenses, (including, but not limited to, reasonable attorney's fees), attributable to bodily injury, sickness, disease or death, or to destruction of tangible property, but only to the extent caused by: a) the negligent or willful acts or omissions of Convergint or Convergint's employees or subcontractors while on Customer's site, or b) the malfunction of the equipment supplied by Convergint, or c) Convergint's breach of this Agreement.

IN NO EVENT SHALL EITHER CONVERGINT OR CUSTOMER BE LIABLE TO THE OTHER PARTY HERETO FOR SPECIAL, INDIRECT, INCIDENTAL OR CONSEQUENTIAL DAMAGES, INCLUDING COMMERCIAL LOSS, LOSS OF USE OR LOST PROFITS, EVEN IF THAT PARTY HAS BEEN ADVISED OF THE POSSIBILTY OF SUCH DAMAGES. IN NO EVENT WILL CONVERGINT BE LIABLE TO CUSTOMER FOR ANY AMOUNTS IN EXCESS OF THE AMOUNTS PAID BY CUSTOMER TO CONVERGINT.

It is understood and agreed by the parties hereto that Convergint is or may be providing monitoring and or intrusion products which are designed to provide notification of certain events but are not intended to be guarantees or insurers against any acts for which they are supposed to monitor or inform. As required by the monitoring and intrusion industry and the manufacturers thereof, Convergint's indemnification obligation pursuant to Section 8 herein, does not apply to the extent the loss indemnified against is caused by any monitoring or intrusion product or software provided by but not manufactured by Convergint. Convergint shall have **no** liability to Customer for any losses to the extent such losses are caused by the monitoring or intrusion product or software. Customer shall indemnify, defend, and hold harmless Convergint, from and against all claims, lawsuits, damages, losses and expenses by persons not a party to this Agreement, but only to the extent caused by such monitoring or intrusion product or software provided by but not manufactured by Convergint.

SECTION 9. COMPLIANCE WITH LAW, EEO & SAFETY

This Agreement shall be governed and construed in accordance with the laws of the state/province in which the Work is being performed. Convergint agrees to comply with all laws and regulations relating to or governing the Work. Convergint agrees to comply with all reporting requirements imposed by law or this Agreement. Convergint shall comply with all safety related laws and regulations and with the safety program of the Customer, provided such program is supplied to Convergint prior to beginning work.

In the event that Convergint discovers or suspects the presence of hazardous materials, or unsafe working conditions at Customer's facility where the Work is to be performed, Convergint is entitled to stop the Work at that facility if such hazardous materials, or unsafe working conditions were not provided by or caused by Convergint. Convergint in its sole discretion shall determine when it is "safe" to return to perform the Work at Customer's facility. Convergint shall have no responsibility for the discovery, presence, handling, removing or disposal of or exposure of persons to hazardous materials in any form at the Customer's facility. Customer shall indemnify and hold harmless Convergint from and against claims, damages, losses and expenses, including but not limited to, reasonable attorney's fees, arising out of or resulting from undisclosed hazardous materials, or unsafe working conditions at Customer's facility.

SECTION 10. DISPUTES

In the event of any dispute between Convergint and Customer, Convergint and Customer shall first attempt to resolve the dispute in the field, but if that is not successful, then in a meeting between authorized officers of each company. If settlement attempts are not successful, then the dispute shall be subject to and decided by mediation or arbitration. Such mediation or arbitration shall be conducted in accordance with the Construction Industry Mediation or Arbitration Rules of the American Arbitration Association currently in effect and shall be a final binding resolution of the issues presented between the parties.

SECTION 11. MISCELLANEOUS

Neither party to this Agreement shall assign this Agreement without the prior written consent of the other party hereto. Convergint may assign this Agreement to any of its parents, subsidiary or affiliated companies or any entity majority owned by Convergint.

Notices shall be in writing and addressed to the other party, in accordance with the names and addresses of the parties as shown above. All notices shall be effective upon receipt by the party to whom the notice was sent.

A waiver of the terms hereunder by one party to the other party shall not be effective unless in writing and signed by a person with authority to commit the Customer or Convergint and delivered to the non-waiving party according to the notice provision herein. No waiver by Customer or Convergint shall operate as a continuous waiver, unless the written waiver specifically states that it is a continuous waiver of the terms stated in that waiver.

The Sections regarding invoicing, warranty and indemnity shall survive the termination of this Agreement.

Phoenix-Mesa Gateway Airport Authority
5835 S Sossaman Road
Mesa, Arizona 85212-6014
www.gatewayairport.com

Board Action Item

Re: Resolution 21-09

To: Board of Directors
From: Shea Joachim, CEcD, Business Development Director
Through: J. Brian O'Neill, A.A.E., Executive Director/CEO
Subject: SkyBridge Arizona – Lot 116-A Adjustment Amendment & Development Lease
Date: April 20, 2021

Proposed Motion

To authorize a Development Lease with SKYPLUS HOTELS, CORP, an Arizona Corporation, for 4.086 acres located within the SkyBridge Arizona project identified as Lot 116-A. The lease term is SIXTY (60) years commencing on May 1, 2021. To authorize an Adjustment Amendment with MESA SKYBRIDGE, LLC to concurrently remove Lot 116-A from the Master Lease Agreement.

Narrative

The Phoenix-Mesa Gateway Airport Authority ("PMGAA") and Mesa SkyBridge, LLC ("SkyBridge") entered into a Master Lease Agreement on April 1, 2018 for the approximately 360-acres located at the southeast corner of Sossaman Road and Velocity Way ("Property"). The Master Lease transferred leasehold control of the Property to SkyBridge but did not convey vertical development rights. As part of the Master Lease, PMGAA and SkyBridge agreed to "spin out" property from the Master Lease into Development Leases as projects became ready for vertical development.

SkyBridge has proposed to build an approximately 65,000 SF, 129-room hotel on Lot 116-A. Lot 116-A is approximately 178,026 SF and has been identified as a non-aeronautical parcel. The proposed development is compliant with the SkyBridge Arizona Master Plan. The attached Adjustment Amendment will formally remove Lot 116-A from the Master Lease and allow Lot 116-A to be included in the proposed Development Lease.

Agreement Term and Rate

The Lot 116-A Development Lease proposes a lease term of SIXTY (60) years with no extensions or renewal options. The Base Rent for Lot 116-A will be $0.00 annually for the first TWO (2) years and $17,802.60 annually starting on the Third (3rd) anniversary of the Effective Date subject to Base Rent Adjustments and Market Adjustments as stipulated in the Development Lease.

Attachment(s)

Lot 116-A Development Lease
Master Lease Adjustment Amendment #7

RESOLUTION NO. 21-09

WHEREAS, the Phoenix-Mesa Gateway Airport Authority ("Authority"), a joint powers airport authority formed pursuant to Arizona Revised Statute §28-8521 *et seq.* owns and operates the Phoenix-Mesa Gateway Airport ("Airport"); and

WHEREAS the Authority desires to authorize a Development Lease with SKYPLUS HOTELS, CORP, an Arizona Corporation, for 4.086 acres located within the SkyBridge Arizona project identified as Lot 116-A. The lease term is SIXTY (60) years commencing on May 1, 2021. To authorize an Adjustment Amendment with MESA SKYBRIDGE, LLC to concurrently remove Lot 116-A from the Master Lease Agreement;

NOW, THEREFORE, BE IT RESOLVED by the Board of Directors of the Authority as follows:

> **The Board of Directors of the Authority hereby authorizes a Development Lease with SKYPLUS HOTELS, CORP, an Arizona Corporation, for 4.086 acres located within the SkyBridge Arizona project identified as Lot 116-A. The lease term is SIXTY (60) years commencing on May 1, 2021. To authorize an Adjustment Amendment with MESA SKYBRIDGE, LLC to concurrently remove Lot 116-A from the Master Lease Agreement. This resolution also authorizes the Chair or Executive Director/CEO to execute such Agreement, with such insertions, deletions, and changes as may be approved by the Chair or Executive Director/CEO, necessary to carry out the purposes and intent of this Resolution.**

Passed and adopted by the Authority this 20th day of April, 2021.

Gail Barney, Chair

ATTEST:

Misty Johnson, Clerk of the Board

APPROVED AS TO FORM:

Jill Casson Owen, Attorney

ADJUSTMENT AMENDMENT TO MASTER LEASE

Development Parcel for Lot 116-A, SkyPlus Hotels, Corp, an Arizona corporation

THIS ADJUSTMENT AMENDMENT TO MASTER LEASE ("**Amendment**") is made as of the 1st day of May, 2021, by and between **PHOENIX-MESA GATEWAY AIRPORT AUTHORITY**, a joint powers airport authority authorized and existing under the laws of the State of Arizona ("**Lessor**"), and **MESA SKYBRIDGE LLC**, an Arizona limited liability company ("**Lessee**"). Lessor and Lessee may be referred to jointly as "Parties," and each separately may be referred to as a "Party."

RECITALS

A. Lessor and Lessee are parties to that certain Master Lease dated April 1, 2018 ("**Lease**") covering certain property commonly known as Gateway Aerospace Park at the Phoenix-Mesa Gateway Airport, which property is more particularly described in the Lease, and referred to in the Lease and in this Amendment as "**Property**."

B. The Parties desire to modify the Lease to remove Development Parcel Lot 116-A from the Property in accordance with Section 2.1.4 of the Lease.

NOW, THEREFORE, in exchange for the mutual covenants and promises contained herein and for other valuable consideration, the receipt and sufficiency of which are hereby acknowledged, Lessor and Lessee agree as follows:

1. Recitals. The above recitals are hereby confirmed as true and correct and are reaffirmed herein.

2. Property Adjustment. Lot 116-A, as described in Exhibit A, is hereby removed from the Lease and from the Rentable Premises. As of the date of this Amendment, after removing Lot 116-A from the Lease, the Rentable Premises is 14,412,683 square feet.

4. Miscellaneous.

(a) Capitalized Terms/Definitions. Each capitalized term used in this Amendment and not defined herein shall be deemed to have the same meaning ascribed to it in the Lease.

(b) Continuing Effect. Except as specifically provided in this Amendment, the provisions of the Lease shall remain unchanged and in full force and effect. In the event of a conflict between the Lease and this Amendment, this Amendment shall control.

(c) Authority. Each person executing this Amendment on behalf of a Party represents and warrants that it has the full power, authority, and legal right to execute and deliver this Amendment on behalf of such Party and that this Amendment constitutes the legal, valid and binding obligations of such Party, its heirs, representatives, successors and assigns, enforceable against such Party or Parties in accordance with its terms.

(d) Counterparts. To facilitate execution of this Amendment, this Amendment may be executed in one or more counterparts as may be convenient or required, and an executed copy of

this Amendment delivered electronically by e-mail shall have the effect of an original, executed instrument. All counterparts of this Amendment shall collectively constitute a single instrument; but, in making proof of this Amendment it shall not be necessary to produce or account for more than one such counterpart executed by each Party hereto. It shall not be necessary for the signature of, or on behalf of, each Party hereto, or that the signature of all persons required to bind any such Party appear on each counterpart of this Amendment.

IN WITNESS WHEREOF, the Parties have executed this Amendment as of the day and year first above written.

LESSOR:

PHOENIX-MESA GATEWAY AIRPORT AUTHORITY, an Arizona joint powers airport authority

By:_____

J. Brian O'Neill, A.A.E.

Executive Director/CEO

LESSEE:

MESA SKYBRIDGE LLC, an Arizona limited liability company

By:_____

Felipe Monroy Torres

CEO

EXHIBIT A

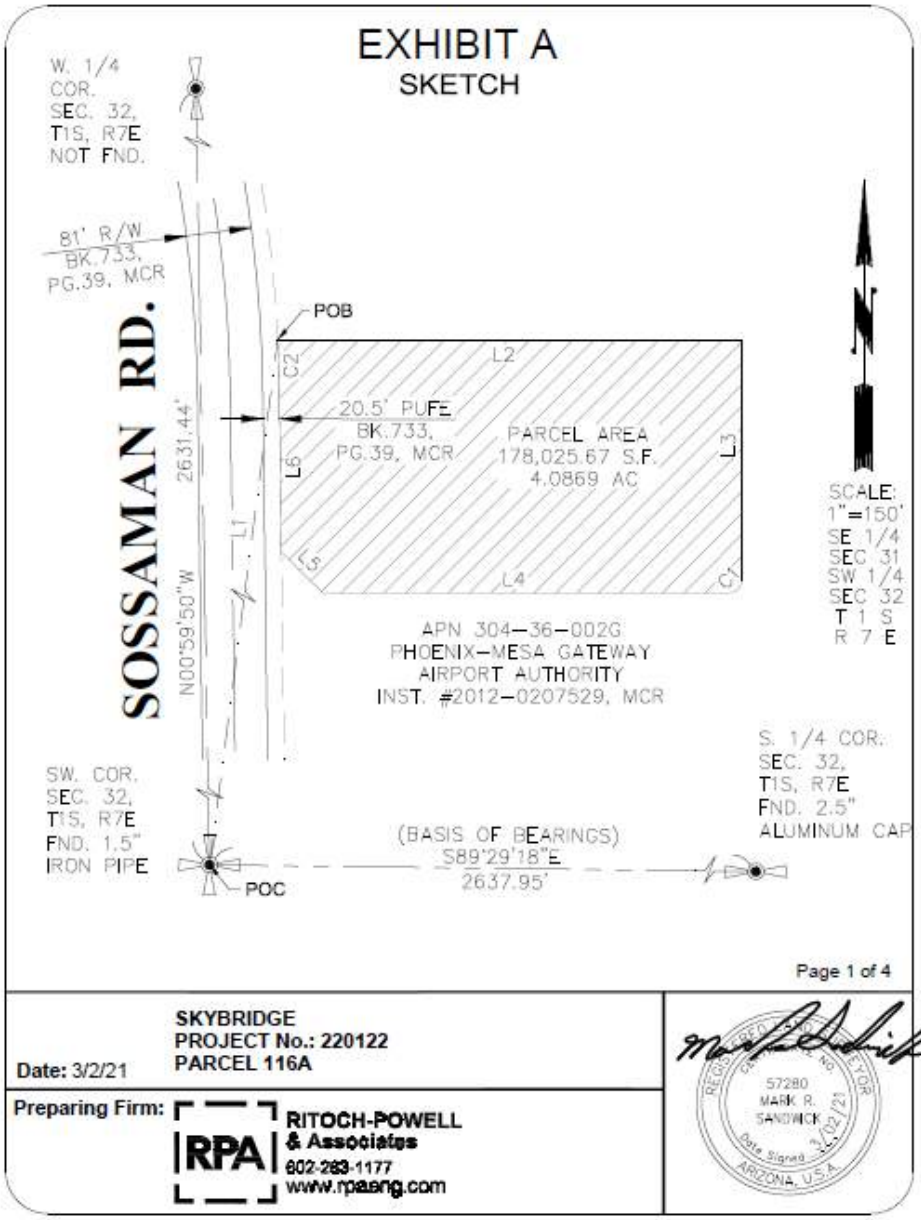

SKYBRIDGE
PROJECT No.: 220122
PARCEL 116A

Date: 3/2/21

Preparing Firm: RPA **RITOCH-POWELL & Associates**
602-283-1177
www.rpaeng.com

REGISTERED LAND SURVEYOR
CERTIFICATE NO.
57280
MARK R. SANDWICK
Date Signed 3/02/21
ARIZONA, U.S.A.

EXHIBIT A
TABLES

CURVE TABLE					
CURVE	DELTA	RADIUS	LENGTH	CHORD	CHORD BRG
C1	90°00'00"	15.00'	23.56'	21.21'	S45°00'00"W
C2	02°05'35"	1811.00'	66.16'	66.15'	N01°47'58"W

LINE TABLE		
LINE	BEARING	DISTANCE
L1	N04°09'50"E	1067.41'
L2	N90°00'00"E	575.14'
L3	S00°00'00"E	298.56'
L4	N90°00'00"W	504.79'
L5	N45°00'00"W	71.66'
L6	N00°45'31"W	196.79'

SKYBRIDGE
PROJECT No.: 220122
PARCEL 116A

Date: 3/2/21

Preparing Firm:

RITOCH-POWELL & Associates
602-263-1177
www.rpaeng.com

REGISTERED LAND SURVEYOR
CERTIFICATE NO.
57280
MARK R.
SANDWICK
Date Signed 3/02/21
ARIZONA, U.S.A.

EXHIBIT A
LEGAL DESCRIPTION

A PARCEL OF LAND BEING A PORTION OF THAT TRACT AS CONVEYED TO PHOENIX-MESA GATEWAY AIRPORT AUTHORITY BY DEED OF RECORD IN INSTRUMENT NUMBER 2012-0207529, MARICOPA COUNTY RECORDS (MCR) AND AS SHOWN ON THAT ALTA/NSPS LAND TITLE SURVEY BY HUNTER ENGINEERING STAMPED AND SIGNED BY JERRY D. HEATH JR. ON 4/30/2018 LOCATED WITHIN A PORTION OF THE SOUTHWEST QUARTER OF SECTION 32, TOWNSHIP 1 SOUTH, RANGE 7 EAST OF THE GILA & SALT RIVER MERIDIAN, CITY OF MESA, MARICOPA COUNTY, ARIZONA, MORE PARTICULARLY DESCRIBED AS FOLLOWS:

COMMENCING AT THE SOUTHWEST CORNER OF SAID SECTION 32 (FND 1.5" IRON PIPE) FROM WHICH POINT THE SOUTH QUARTER CORNER THEREOF (2.5" AL CAP) BEARS S 89°29'18" E A DISTANCE OF 2637.95 FEET;

THENCE N 4°09'50" E A DISTANCE OF 1067.41 FEET TO A POINT ON THE EAST LINE OF A PUBLIC UTILITY AND FACILITY EASEMENT (PUFE) AS SHOWN ON THE MAP OF DEDICATION FOR VELOCITY WAY, SOUTH TAXIWAY CIRCLE AND SOUTH CARGO WAY RECORDED IN BOOK 733, PAGE 39, MARICOPA COUNTY RECORDS BEING THE WEST BOUNDARY LINE OF SAID ALTA/NSPS LAND TITLE SURVEY THE POINT OF BEGINNING;

THENCE ACROSS SAID PHOENIX-MESA GATEWAY AIRPORT AUTHORITY TRACT THE REMAINING COURSES AND DISTANCES:

THENCE N 90°00'00" E A DISTANCE OF 575.15 FEET;

THENCE S 00°00'00" E A DISTANCE OF 298.56 FEET;

THENCE ALONG THE ARC OF A CURVE TO THE RIGHT HAVING A RADIUS OF 15.00 FEET, THROUGH A CENTRAL ANGLE OF 90°00'00" AND HAVING AN ARC LENGTH OF 23.56 FEET;

THENCE N 90°00'00" W A DISTANCE OF 504.79 FEET;

THENCE N 45°00'00" W A DISTANCE OF 71.67 FEET TO A POINT ON SAID EAST PUFE LINE;

SKYBRIDGE
PROJECT No.: 220122
PARCEL 116A

Date: 3/2/21

Preparing Firm: RITOCH-POWELL & Associates
602-263-1177
www.rpaeng.com

REGISTERED LAND SURVEYOR
CERTIFICATE NO.
57280
MARK R. SANDWICK
Date Signed 3/02/21
ARIZONA, U.S.A.

EXHIBIT A
LEGAL DESCRIPTION

THENCE N 00°45'32" W, ALONG SAID EAST PUFE LINE, A DISTANCE OF 196.92 FEET AND THE BEGINNING OF A NON-TANGENT CURVE TO THE LEFT FROM WHICH POINT THE RAIDIUS POINT BEARS S 89°14'28" W;

THENCE ALONG SAID NON-TANGENT CURVE TO THE LEFT AND ALONG SAID EAST PUFE LINE HAVING A RADIUS OF 1811.00 FEET, THROUGH A CENTRAL ANGLE OF 02°05'20" AND HAVING AN ARC LENGTH OF 66.02 FEET TO THE POINT OF BEGINNING.

THE ABOVE DESCRIBED PARCEL CONTAINS 178,027.66 SQUARE FEET OR 4.0869 ACRES OF LAND, MORE OR LESS, INCLUDING ANY EASEMENTS OF RECORD.

THE BASIS OF BEARING FOR THE ABOVE DESCRIPTIONS IS S 89°29'18" E FOR THE SOUTH LINE OF THE SOUTHWEST QUARTER OF SECTION 32, TOWNSHIP 1 SOUTH, RANGE 7 EAST OF THE GILA & SALT RIVER MERIDIAN, CITY OF MESA, MARICOPA COUNTY, ARIZONA, AS SHOWN ON THE PLSS SUBDIVISION RECORD OF SURVEY-MARICOPA COUNTY GEODETIC DENSIFICATION AND CADASTRAL SURVEY RECORDED IN BOOK 609, PAGE 29, MARICOPA COUNTY RECORDS.

SKYBRIDGE
PROJECT No.: 220122
PARCEL 116A

Date: 3/2/21

Preparing Firm: RPA **RITOCH-POWELL & Associates**
602-263-1177
www.rpaeng.com

REGISTERED LAND SURVEYOR
CERTIFICATE NO.
57280
MARK R. SANDWICK
Date Signed 3/02/21
ARIZONA, U.S.A.

Phoenix-Mesa Gateway Airport Authority

DEVELOPMENT LEASE NO. 003
Non-Aeronautical Development Parcel for Lot 116-A

with

SKYPLUS HOTELS, CORP, an Arizona corporation

Effective Date:

May 1, 2021

TABLE OF CONTENTS

		Page
1.	LEASE.	4
2.	TERM.	6
3.	NONEXCLUSIVE RIGHTS.	6
4.	RENT.	6
5.	PERFORMANCE GUARANTEE.	9
6.	AIRCRAFT OPERATIONS GUIDELINES.	10
7.	IMPROVEMENTS.	10
8.	MAINTENANCE.	12
9.	ASSIGNMENT, SUBLETTING AND OTHER TRANSFERS.	13
10.	SIGNS.	14
11.	DEFAULT; TERMINATION BY LESSOR.	15
12.	[RESERVED].	17
13.	INDEMNIFICATION.	17
14.	ENVIRONMENTAL PROTECTION.	17
15.	PROTECTION OF WETLANDS.	23
16.	SPECIAL PROVISIONS.	23
17.	INSURANCE.	23
18.	SURRENDER OF POSSESSION.	24
19.	INSPECTION BY LESSOR.	25
20.	NOTICES.	25
21.	SEVERABILITY.	26
22.	SALES AND PROPERTY TAXES.	26
23.	APPROVALS, CONSENTS AND NOTICES.	26
24.	LIENS AND MORTGAGES.	26
25.	GOVERNING LAW; ATTORNEY'S FEES.	30
26.	RULES AND REGULATIONS.	30
27.	CORPORATE AUTHORIZATION.	30
28.	UTILITY LINES AND SERVICE CHARGES.	30
29.	RESERVATIONS TO LESSOR.	31
30.	FEDERAL AVIATION ADMINISTRATION (FAA) PROVISIONS.	31
31.	TITLE VI OF THE CIVIL RIGHTS ACT OF 1964.	33
32.	FEDERAL FAIR LABOR STANDARDS ACT	35

33. OCCUPATIONAL SAFETY AND HEALTH ACT OF 1970 35
34. INCORPORATION OF QUITCLAIM DEED. 36
35. REQUIRED PROVISIONS OF QUITCLAIM DEED. 36
36. AIRPORT SECURITY. 36
37. DEFAULT BY LESSOR. 37
38. BROKERS. 37
39. SALE BY LESSOR. 38
40. ESTOPPEL CERTIFICATE. 38
41. UNAVOIDABLE DELAY. 38
42. MISCELLANEOUS. 38
43. INCORPORATION OF RECITALS. 40
44. DECLARATION. 40
EXHIBIT A 43
EXHIBIT B 48
EXHIBIT C 49
EXHIBIT D 51
EXHIBIT E 52
EXHIBIT F 53

Phoenix-Mesa Gateway Airport Authority
DEVELOPMENT LEASE

a Non-Aeronautical Development Parcel for Lot 116-A

This Development Lease ("**Lease**") is executed to be effective the FIRST (1st) day of May 2021 ("**Effective Date**") between the **PHOENIX-MESA GATEWAY AIRPORT AUTHORITY**, a joint powers airport authority authorized and existing under the laws of the State of Arizona ("**Lessor**"), and **SKYPLUS HOTELS , CORP**, an Arizona corporation ("**Lessee**"). Lessor and Lessee may be referred to jointly as "Parties," and each separately may be referred to as a "Party."

RECITALS:

A. Lessor is the owner and operator of the Phoenix-Mesa Gateway Airport generally located at the intersection of Ray Road and Sossaman Road, City of Mesa, Maricopa County, Arizona ("**Airport**"); and

B. Lessor has the right to lease, license and grant the use of property and facilities on the Airport and has full power and authority to enter into this Lease in respect thereof; and

C. Lessor desires to lease to Lessee, and Lessee desires to lease from Lessor, that certain real property at the Airport which is part of what is known as Lot 116-A on the Master Plan containing approximately 178,026 square feet of land, as set forth in **Exhibit A** attached hereto ("**Premises**");

D. The Premises is identified in the Master Plan and the Airport Layout Plan as a Non-Aeronautical Development Parcel; and

E. Lessor desires to lease the Premises to Lessee on the terms and conditions set forth herein;

NOW THEREFORE, in consideration of the foregoing and of the mutual covenants and agreements herein contained, the Parties do hereby undertake, promise and agree, each for itself and its successors and assigns, as follows:

1. LEASE.

Lessor hereby leases the Premises to Lessee, subject to all easements, deed restrictions and other similar matters of record in the Official Records of Maricopa County, Arizona, that encumber the Premises, and further subject to all operational and use restrictions and other terms and conditions expressly set forth in this Lease.

1.1 Right to Use Premises. Lessor agrees that so long as no Event of Default shall have occurred and is continuing, Lessee shall peaceably have and enjoy the use of the Premises without hindrance from Lessor and those claiming through Lessor. Lessee specially acknowledges that Lessee has inspected the Premises prior to entering into this Lease and agrees to accept the Premises in an "as is, where is" condition without any warranty or representation from Lessor, either express or implied, of any kind or nature whatsoever with respect to the Premises, including, but not limited to, any warranty of merchantability, habitability, or fitness for any

particular or specific purpose, and all such warranties are hereby disclaimed, except for representations and warranties contained in this Lease. Should Lessee desire any inspection report, environmental assessment, survey, creation of a legal description, drainage report, or any similar study, Lessee shall be responsible for the same at Lessee's sole expense, subject to Lessor's duty to cooperate with Lessee (at no or nominal cost to Lessor) in connection with such activities and undertakings.

1.2 Intentionally Omitted.

1.3 Access. Lessee is granted the right of access to and from the Premises via such portions of the Airport as are or may be reasonably necessary to allow Lessee to conduct its business operations permitted herein at and on the Premises and the Airport, provided that Lessor reserves the right to limit access to the Premises in emergencies and in connection with Lessor's construction activities on the Airport, so long as Lessor provides Lessee with reasonable advance written notice of any limitations on Lessee's access to the Premises due to Lessor's construction activities, and Lessor and Lessee coordinate such construction activities and cooperate one with the other to minimize any interference with, or disruption of, Lessee's business activities. Lessor reserves the right to designate the location of such alternative access due to emergencies and Lessor's construction activities, and to change its location from time to time, as Lessor deems reasonably necessary and appropriate; provided such changes do not materially interfere with Lessee's use of or access to the Premises.

1.4 Permitted Uses. Subject to the provisions of Section 1.5, Lessee may use the Premises for commercial hospitality, meeting spaces, retail or restaurant use, general office, and other uses relating or incidental thereto and for no other use. Lessee shall not use any portion of the Premises for a Prohibited Use, which Prohibited Uses are set forth on **Exhibit E**. Lessee's use of the Premises and operation of its business at and on the Airport and the Premises is subject to all applicable laws, rules and regulations of any governmental authority, including Lessor, and to Lessee's compliance with applicable provisions of the *Airport Rules and Regulations* and *Airport Minimum Standards*.

1.5 Prohibited Activities. Lessee shall not use, or permit its agents, employees or contractors acting for or on behalf of Lessee in connection with their scope of employment to use, the Premises or the Airport for any use that is in violation of the *Airport Rules and Regulations*, the *Airport Minimum Standards*, any matters of record, or applicable laws, or for any other activity or operation not specified in Section 1.4 herein, or that does not have advance, written approval of Lessor's Executive Director or other authorized signatory of Lessor.

Lessor agrees to reasonably consult with Lessee prior to executing or entering into any agreement that could reasonably be expected to have a material effect on the Premises, or on Lessee or its subtenants, or on any Permitted Uses, with the stated purpose of attempting in good faith to avoid any interference with, disruption of, or restriction or limitation on Lessee's intended use and development of the Premises in accordance with this Lease.

1.6 On-Site Manager. Upon commencement of business operations at and on the Premises, Lessee shall designate an on-site manager for the Term of this Lease who shall generally be available to Lessor and Lessee's customers, if any, during Lessee's normal business hours, and otherwise as required by the *Airport Minimum Standards*, as applicable. Lessee may change Lessee's on-site manager from time to time.

1.7 Lessee Acknowledgement. Lessee acknowledges that, except as otherwise provided in this Lease, its obligations to pay Base Rent and all other charges due and owing under the terms hereof shall be absolute and unconditional, and shall not be affected by any circumstances whatsoever, including, without limitation: (i) any set-off, counterclaim, recoupment, defense or other right which Lessee may have against Lessor or the United States of America or anyone else for any reason whatsoever; (ii) any liens, encumbrances or rights of others with respect to the Premises; (iii) the invalidity or unenforceability or lack of due authorization or other infirmity of this Lease or any lack of right, power or authority of Lessor or Lessee to

enter into this Lease; (iv) any insolvency, bankruptcy, reorganization or similar proceedings by or against Lessee, or any other person; or (v) any other cause, whether similar or dissimilar to the foregoing, any future or present law notwithstanding, it being the intention of the Parties hereto that all rent being payable by Lessee hereunder shall continue to be payable in all events and in the manner and at the times provided herein.

2. TERM.

2.1 Initial Term. The term of this Lease shall be for a period of SIXTY (60) years, commencing on the Effective Date and terminating on APRIL 30, 2081 ("**Term**").

2.2

3. NONEXCLUSIVE RIGHTS.

Lessee shall have the exclusive right to lease, use, occupy and develop the Premises in compliance with the terms and conditions of this Lease during the Term. All other rights granted to Lessee under this Lease are nonexclusive. Lessor may, in its sole discretion and at any time, permit third parties to conduct any and all business activities at the Airport (other than on the Premises) that Lessor deems appropriate, provided that such activities do not limit, prevent, materially interfere with, or prevent or disrupt the use and development of the Premises by Lessee.

4. RENT.

4.1 Base Rent. Lessee agrees to pay Lessor annual rental ("Base Rent") for the use of the Premises as follows:

4.1.1 Subject to Section 4.4 below, commencing on the Effective Date through the end of the SECOND (2nd) Lease Year, Base Rent shall be $0.00 per square foot of the Premises per year.

4.1.2 Commencing on May 1, 2023 through March 31, 2048, Base Rent shall be $0.10 per square foot of the Premises per year, subject to the triennial CPI Adjustment set forth in Section 4.2 below.

4.1.3 Commencing on April 1, 2048, through the end of the Term, Base Rent per square foot of the Premises per year shall be an amount equal to fair market value as determined in accordance with Section 4.3 below, subject to the triennial CPI Adjustments set forth in Section 4.2 below.

4.2 Base Rent Adjustments. Commencing on the SIXTH (6th) anniversary of the Effective Date and continuing thereafter on every THREE (3) year anniversary of the Effective Date of this Lease, the annual Base Rent paid by Lessee shall be adjusted (whether increased or decreased) by a percentage equal to the percentage that the Consumer Price Index (CPI) (as defined below) changed during the immediately preceding THIRTY-SIX (36) month period ending NINETY (90) days prior to the end of the adjustment period during the Term hereof ("**CPI Adjustment**"). For purposes of this Lease, CPI means the United States Department of Labor, Bureau of Statistics Consumer Price Index for all Urban Consumers (CPI-U), U.S. City Average (1982-1984=100). If at any time CPI ceases to exist, Lessor may substitute any official index published by the Bureau of Labor Statistics or by a successor or similar government agency as may then exist and which in Lessor's reasonable business judgment shall be most nearly equivalent to the CPI. Lessor agrees to promptly notify Lessee of any CPI Adjustment (and in any event at least THIRTY (30) days prior to any adjustment in Base Rent payments as a result of any CPI Adjustment), and to provide Lessee with a reasonably-detailed description of Lessor's calculations of any CPI Adjustment and any adjustment in Base Rent payments.

4.3 Market Adjustments to Base Rent.

4.3.1 Notwithstanding the Base Rent increases referenced in Section 4.2, on: (a) April 1, 2048 and (b) each subsequent TEN (10) year anniversary of April 1, 2048, the annual Base Rent shall be adjusted

(each, a "**Market Adjustment Date**") as hereinafter set forth in this Section. On each such Market Adjustment Date, the Base Rent shall be adjusted to the fair market base rental rate of the Premises, in relation to comparable (in quality, size, and value) airport-related facilities.

4.3.2 Lessor's determination of such fair market base rental rate for the Premises shall be delivered to Lessee no later than ONE HUNDRED TWENTY (120) calendar days prior to the Market Adjustment Date. If Lessee disputes Lessor's determination of such fair market base rental rate, Lessee shall deliver written notice of such dispute, together with Lessee's determination of such fair market base rent rate, to Lessor within SIXTY (60) calendar days of Lessee's receipt of Lessor's determination. The Parties shall then attempt in good faith to agree upon such fair market base rental rate. The fair market base rental rate shall take into consideration and reflect the limitations and restrictions on Lessee and on the use and development of the Premises and the location of the Premises relative to other regional, national and international airport facilities. If the Parties fail to agree within FIFTEEN (15) business days, they shall, within TEN (10) calendar days thereafter, mutually appoint an appraiser to determine the fair market base rental rate. Said appraiser shall be a qualified MAI appraiser, licensed in the state of Arizona, with at least FIVE (5) years of recent continuous experience in determining the fair market rates for commercial properties similar to the Premises and be a member of the Appraisal Institute or comparable professional organization. If the Parties are unable to agree upon an appraiser within such 10-day period, they shall, within FIVE (5) business days thereafter, jointly apply to the president of the local Board of Realtors for the selection of an appraiser. The president of the Board of Realtors shall, within FIFTEEN (15) business days, select an appraiser with the above qualifications who has not acted in any capacity for either Party within the prior FIVE (5) years. Within SEVEN (7) calendar days of the appointment (either by agreement or selection) of the appraiser, the Parties shall submit to the appraiser their respective determinations of the fair market base rental rate and any/all substantiated information. Within TWENTY (20) business days thereafter, the appraiser shall review each Party's submittal (and such other information as the appraiser deems necessary) and shall select one Party's submittal as representing the most reasonable approximation of such fair market base rental rate, and the appraiser's fees and expenses shall be paid one-half each by each Party.

4.4 Vacancy Relief Periods. Provided no Event of Default shall have occurred and is continuing, Lessee shall have the continuing option to exercise up to TWO (2) Vacancy Relief Periods of up to TWELVE (12) months for each Vacancy Relief Period during any period of time that the Improvements on the Premises are at least FIFTY PERCENT (50%) vacant. Lessee may initiate a Vacancy Relief Period by giving written notice ("**Vacancy Relief Notice**") to Lessor of its desire to do so. Lessee's use and occupancy of the Premises shall not be taken into consideration in determining whether the Improvements are vacant, unless Lessee is actively conducting Lessee's business activities for a Permitted Use within such Improvements. An office maintained by Lessee in the Premises for the purpose of marketing and subleasing the Premises shall not be considered as Lessee actively conducting Lessee's business activities. The Vacancy Relief Notice shall identify the starting date and ending date for the Vacancy Relief Period (not to exceed TWELVE (12) months), and Lessee shall provide, simultaneously with each Vacancy Relief Notice, evidence reasonably satisfactory to Lessor that the Improvements on the Premises are at least FIFTY PERCENT (50%) vacant. During a Vacancy Relief Period, Lessee shall be entitled to pay a reduced Base Rent equal to FIFTY PERCENT (50%) of the Base Rent that would otherwise be applicable during such time. A Vacancy Relief Period shall terminate on the earlier of (a) the expiration of the TWELVE (12)-month period identified in the Vacancy Relief Notice, or (b) the date on which FIFTY-ONE PERCENT (51%) of the occupiable Improvements on the Premises are occupied, evidenced by executed subleases. Upon expiration of the Vacancy Relief Period, Lessee shall resume paying full Base Rent.

4.5 Construction Rent Period. A modified base rent for a construction period during the first TWO (2) Lease years ("**Construction Base Rent Period**") has been granted to Lessee as additional consideration for entering into this Lease and agreeing to pay the Base Rent and all other charges hereunder, and to perform the terms and provisions otherwise required under this Lease. If an Event of Default by Lessee occurs, which is not cured within the applicable cure period, in addition to all other rights and remedies of Lessor provided by law, equity, statute or otherwise provided in this Lease, at Lessor's option in its sole and absolute discretion, (i) if

the Event of Default occurs within the Construction Base Rent Period, Lessee shall commence paying the full Base Rent at the rate of $0.10 per square foot per year for the balance of the Construction Base Rent Period, and (ii) if an Event of Default by Lessee occurs during the initial Term, which is not cured within the applicable cure period, Lessee shall immediately pay to Lessor an amount equal to the unamortized portion of Base Rent at the rate of $0.10 per square foot per year during the Construction Base Rent Period, which Lessor shall amortize over the initial Term on a straight-line basis.

4.6 Payment.

4.6.1 Base Rent shall be payable in equal monthly installments, in advance, without any prior demand therefor and without any abatement, deductions or set-offs whatsoever, and tendered in lawful currency of the United States, either by check or electronic transfer. Base Rent and any other charges due for any period during the Term less than ONE (1) calendar month shall be prorated on a daily basis based on a THREE HUNDRED SIXTY-FIVE (365) day year.

4.6.2 No payment to or receipt by Lessor of a lesser amount than that which is due and payable under the provisions of this Lease at the time of such payment shall be deemed to be other than a payment on account of the earliest payment due, nor shall any endorsement or statement on any check or payment prejudice in any way Lessor's right to recover the balance of such payment or pursue any other remedy provided in this Lease or by law.

4.6.3 All payments (and reports, if any) required by this Section 4.6 shall be remitted to the following address by the due date(s) specified hereinabove:

Phoenix-Mesa Gateway Airport Authority
Attn.: Department of Finance (Accounts Receivable)
5835 S. Sossaman Road
Mesa, Arizona 85212-6014

or such other address specified in advance in writing by Lessor to Lessee.

4.7 Finance Charges and Late Fees. If Lessee fails to pay any installment of Base Rent or any other charge due and owing to Lessor in full on or before the applicable due date, Lessee shall be responsible for interest on the unpaid installment at the rate of EIGHTEEN PERCENT (18%) per annum from the due date until payment in full is made. In addition, in the event any installment of Base Rent or other charge owing to Lessor is paid more than TEN (10) days after the due date, a late penalty of TEN PERCENT (10%) of the amount of such delinquent Base Rent installment or other charge shall be due and payable in addition thereto.

4.8 Taxes. In the event any governmental authority shall impose a tax or imposition based upon any Base Rent payments or any other sums paid or owing hereunder, or the receipt of such payments by Lessor, Lessee shall pay such amounts to Lessor at the same time and in addition to payments hereunder, which amounts may include, but are not limited to, any or all rental, transaction privilege, sales, excise or other similar tax except income taxes.

4.9 Survival. Lessee's obligation to pay all amounts stated herein, together with any interest thereon and/or penalties therefor, shall survive the termination of this Lease.

4.10 Airport Rates and Charges Schedule. Lessee or its subtenants, as applicable and including its contractors, agents, etc., shall pay all fees identified in the most current *Airport Rates and Charges Schedule* at the time of receipt of any covered service or use of any covered facilities, unless specifically outlined in this Lease. The current *Airport Rates and Charges Schedule* is included as **Exhibit B** and is subject to change upon prior notice to Lessee. Lessee acknowledges and agrees that Lessor may amend the *Airport Rates and Charges Schedule* at any

time at Lessor's sole discretion, and that no fee shall apply to the use or occupancy of the Premises or access to and from the Premises.

5. PERFORMANCE GUARANTEE; CONSTRUCTION ESCROW.

5.1 Security Deposit.

5.1.1 On or before the Effective Date, Lessee shall pay to Lessor an amount equal to TWO THOUSAND NINE HUNDRED SIXTY-SEVEN and 10/100 ($2,967.10) as a security deposit ("**Security Deposit**") to insure the faithful performance of all of Lessee's obligations hereunder.

5.1.2 The Security Deposit, upon the occurrence of an Event of Default, at the election of Lessor, may be applied to any actual loss and/or actual damage sustained by Lessor by reason of the occurrence of such Event of Default by Lessee under this Lease without the waiver of any other right or remedy available to Lessor at law, in equity or under the terms of this Lease. If any portion of the Security Deposit is so used or applied, Lessee shall, within FIVE (5) business days after written notice from Lessor, deposit with Lessor immediately available funds in an amount sufficient to restore the Security Deposit to its original amount. In the event of a sale or other transfer of the Premises by Lessor, Lessor shall transfer the remaining balance (if any) of the Security Deposit to Lessor's successor in interest, whereupon the transferor Lessor shall be released from liability to Lessee for the return of such Security Deposit. Unless this Lease is terminated as a result of Lessee's default whereupon Lessee shall immediately forfeit its Security Deposit to Lessor, upon termination or expiration, Lessor shall return to Lessee all portions of the Security Deposit which were not otherwise applied by Lessor as permitted above. Lessor shall have no obligation to maintain a separate account for such security deposit and shall have no obligation to pay interest thereon.

5.2 Improvement Construction Guarantee.

5.2.1 Payment Guarantee. Notwithstanding and in addition to the Security Deposit, Lessee shall protect claimants supplying labor and materials in connection with the construction, by providing, at Lessee's sole cost and expense and prior to commencement of construction of said improvements, one of the following instruments, chosen at Lessee's discretion:

(a) Payment Bond. Lessee shall require the contractor to provide a labor and materials payment bond in the full contract amount to protect claimants supplying labor and materials in connection with the construction. The bond shall comply in all respects with the requirements of A.R.S. S 33-1003 as it may be amended or renumbered from time to time. The parties agree that Lessee is not a public body, and the improvements to be constructed under this Lease by Lessee at Lessee's sole cost are not public buildings, public works or public improvements. The bond shall be issued by a surety company reasonably acceptable to Lessor and duly licensed for such undertaking in the State of Arizona and shall be accompanied by a power of attorney disclosing the authority of the person executing on behalf of the surety. The bond and a copy of the contract shall be recorded in the office of the Maricopa County Recorder as required under A.R.S. S 33-1003, and a copy of the bond provided to the Lessor; or

(b) Letter of Credit. Such instrument (**"Letter of Credit"**) shall be irrevocable, in the amount equal to the total amount of the construction contract(s) for the construction of the improvements (described in Section 7 herein) plus TEN PERCENT (10%) of such amount (**Improvement Costs"**) and should be issued to Lessee by a financial institution (**"Bank"**) reasonably acceptable to the Lessor. The Letter of Credit shall have a term extending from the date of commencement of construction until the date with is TWENTY-FOUR (24) months thereafter, after which the date it shall be renewed on a year-to-year basis until construction of such improvements are completed, and final and unconditional lien waivers have been obtained from all contractors supplying labor and materials in connection with the construction. Should Lessee utilize the Letter of Credit option hereunder, and should Lessee fail to pay any sum owing to

contractors supplying labor and materials in connection with the construction then, in addition to any other remedies set forth in this Lease, Lessor shall be entitled to apply to the Bank, following a period of THIRTY (30) calendar days prior written notice to Lessee (which notice shall include reasonably-detailed description of the Lessee's failure to pay any sum owing), for release to Lessor (in accordance with the terms of the Letter of Credit) from the Letter of Credit of a dollar amount sufficient to pay amounts owing to contractors supplying labor and materials in connection with the construction and obtain final, unconditional lien waivers in connection therewith. Lessor's application shall contain evidence of the failure of payment and the estimated dollar amount needed to satisfy payment obligations. The terms of the Letter of Credit shall require prompt payment to Lessor for the amount set forth in Lessor's application upon satisfaction of the conditions set forth in the Letter of Credit. Upon and following any partial payment to the Lessor, the Letter of Credit shall remain in full force for the remaining undisbursed amount of the Letter of Credit to accommodate further applications, if any, and shall not be subject to cancellation or revocation until fully drawn or otherwise released or satisfied upon completion of construction of the improvements and final, unconditional lien waivers have been obtained from all contractors supplying labor and materials in connection with the construction. Lessor must approve the form and content of any Letter of Credit in writing, which approval shall not be unreasonably withheld, conditioned, or delayed.

5.2.2 Performance Guarantee. In addition to the Security Deposit, Lessee's obligation to timely complete the improvements described in Section 7 herein shall be secured, at Lessee's sole cost and expense and prior to commencement of construction of said improvements, by any one of the following instruments, chosen at Lessee's discretion:

(a) Performance Bond. Lessee shall require the contractor to provide a performance bond in the full contract amount conditioned upon the faithful performance of the contract in accordance with the plans, specifications and conditions thereof. The bond shall be in a form reasonably acceptable to Lessor; shall be issued by a surety company reasonably acceptable to the Lessor and duly licensed for such undertaking in the state of Arizona; and shall be accompanied by a power of attorney disclosing the authority of the person executing it on behalf of the surety.; or

(b) Completion Bond. Lessee shall deliver to Lessor a completion bond in form and substance reasonably acceptable to Lessor pursuant to which Lessor shall have the unconditional, direct and unilateral right to draw upon or use such bond for completion of construction of the Improvements under Section 7.1 of this Lease if an Event of Default occurs and is continuing under Section 72.2 of this Lease. The bond shall be in a form reasonably acceptable to Lessor; shall be issued by a surety company reasonably acceptable to Lessor and duly licensed for such undertaking in the state of Arizona; and shall be accompanied by a power of attorney disclosing the authority of the person executing it on behalf of the surety.

6. AIRCRAFT OPERATIONS GUIDELINES.

If and to the extent that Lessee operates aircraft at or on the Airport, Lessee shall be subject to the provisions of **Exhibit C**. If any subtenant, contractor or agent of Lessee conducting activities on or at the Premises for or on behalf of Lessee and acting within the scope of their employment operates aircraft at the Airport, all shall be subject to the provisions of **Exhibit C**, which Lessor may enforce directly against such subtenant, contractor or agent, but Lessee shall have no direct liability or responsibility with respect to such matters; except, however, Lessee shall be responsible for compliance by its subtenants, contractors and/or agents with the *Airport Rules and Regulations* and *Airport Minimum Standards*, as appropriate.

7. IMPROVEMENTS.

7.1 Construction by Lessee. Lessee shall, at its sole cost and expense, construct improvements on the Premises that are generally described as a three-story.129-room, dual branded hotel with associated amenities including meeting space for up to 350 people and associated parking and

generally cost $12,500,000 ("**Improvements**") in accordance with a site plan prepared by Lessee and approved by Lessor or by Lessor's Design Review Committee, if any, such approval not to be unreasonably withheld, conditioned, or delayed, and in compliance with all applicable governmental regulations, restrictions, building codes and any declaration of covenants, conditions, restrictions and easements of record affecting the Premises and any design guidelines promulgated pursuant thereto that are applicable to the Premises. Lessor and Lessee agree that Lessee shall be solely responsible for: (i) any connection(s) between the Premises and the terminating point of the existing vehicular access way to the Premises that is required by applicable or utility provider or is requested by Lessee; (ii) constructing all improvements necessary to bring all utilities to the Improvements; (iii) installing all utility meters and water and sewer lines to service all Improvements constructed on the Premises; and (iv) if applicable, constructing all Improvements necessary to connect the Premises to existing taxiways or taxilanes in accordance with and if allowable under all Airport and FAA rules, regulations and other requirements.

7.2 Construction Milestones; Termination. Lessee shall construct its Improvements pursuant to the following schedule (each of which events are herein called a "**Construction Milestone**"):

7.2.1 Lessee shall submit its Improvement design plans to Lessor for review and approval no later than TWO (2) months from the Effective Date.

7.2.2 Lessee shall complete construction of all Improvements to be constructed by the Lessee at and on the Premises and shall have obtained a CofO (or its equivalent) from the City of Mesa therefor, no later than EIGHTEEN (18) months from the Effective Date.

7.2.3 If Lessee fails to commence construction within NINETY (90) calendar days after the issuance of all necessary construction permits and receipt of all approvals required for such, including any approvals required from the FAA, but subject to any applicable notice and cure periods provided for in Section 11, Lessor shall have the right to terminate this Lease by written notice to Lessee delivered at any time prior to commencement of construction. For purposes of this section "commencement of construction" shall be the date on which Lessee has obtained it permits, has executed a contract for construction of the Improvements and engaged in material work, such as grading or pouring of footings and slabs.

7.3 No Alterations. Lessee shall make no material improvements or alterations to the Premises during the Term of this Lease without the prior written permission of Lessor, which shall not be unreasonably withheld, conditioned, or delayed including, if and to the extent applicable, the approval by Lessor's Design Review Committee. The process of approving any material improvements or alterations by Lessor and Lessor's Design Review Committee shall occur within the same period of time (without duplication) given to Lessor for approval of the same. Lessor will have FORTY-FIVE (45) days following receipt of a written request by Lessee for approval of material improvements or alterations to either approve or disapprove the same. If Lessor disapproves, Lessor shall provide Lessee with a reasonably-detailed explanation for Lessor's disapproval and suggestions for revisions that would reasonably satisfy Lessor's disapproval. If Lessor fails to respond within such FORTY-FIVE (45)-day period Lessee may give a second notice to Lessor requesting approval of material improvements or alterations, on which the following language must appear in bold print: "**FAILURE TO RESPOND TO THIS NOTICE WITHIN FIVE (5) BUSINESS DAYS FROM ITS RECEIPT SHALL RESULT IN THE LESSEE'S PROPOSED IMPROVEMENTS AND ALTERATIONS BEING DEEMED APPROVED**." If Lessor fails to respond in writing (in the manner described above) to any matter in such second notice within FIVE (5) business days following delivery of such notice, Lessee's proposed improvements and alterations shall be deemed to have been approved by Lessor. If Lessor disapproves a request for approval and sets forth the reason for its disapproval, then Lessee may resubmit a revised description of the improvements or alterations for review and approval. This cycle will repeat itself until Lessor either approves the request or is deemed to have approved the same. Lessee shall provide Lessor with electronic as-built drawings (or their equivalent) when any improvement or alteration is completed for which such drawings are reasonably required.

7.4 Title to Alterations and Improvements. Title to all Improvements and alterations on the Premises (but not personal property or trade fixtures) shall vest in Lessor upon the expiration of this Lease, and Lessee agrees to execute and deliver to Lessor, within TEN (10) business days after Lessor's written request therefor, a quitclaim deed quitclaiming such Improvements and alterations to Lessor.

7.5 Mechanics' Liens. Lessee shall keep the Premises and all improvements constructed by Lessee thereon free of any mechanic or materialmen's liens. In the event that any such lien is filed, Lessee shall, at its sole cost, cause such lien to be removed from the Premises by bonding or otherwise within THIRTY (30) calendar days of notice thereof.

7.6 Permit Required. Lessee shall be responsible for determining whether it is subject to local building/construction codes or permit requirements, and for compliance with them to the extent they are applicable. All structural, electrical, plumbing or mechanical construction or reconstruction of the Improvements shall conform to City of Mesa ("**City**") construction and technical codes. No such work shall be commenced without first obtaining required permits from the City. All such work shall be permitted, inspected and approved by the City prior to concealment or use, as required by applicable laws. Lessee shall provide to Lessor a contemporaneous copy of Lessee's permit application and a copy of the final stamped approval and the associated plans and specifications.

7.7 Damage or Destruction. Lessee shall maintain insurance on all of Lessee's Improvements to the Premises. In the event that all or any portion Lessee's Improvements are destroyed or rendered unusable due to fire or other catastrophe, Lessee shall replace, repair, restore, modify or improve said Improvements, subject to the provisions of Section 7.6, using available insurance proceeds together with any additional funds from other available sources. Notwithstanding the foregoing, if any damage or destruction occurs to the Premises during the last 5 years of the Initial Term or any Extension Term and the cost to repair the damage exceeds 65% of the total replacement cost, Lessee may terminate this Lease upon giving Lessor thirty (30) days' written notice, whereupon Lessee shall pay the replacement cost of the Improvements to Lessor.

8. MAINTENANCE.

8.1 Lessee Responsibilities. Lessee shall, at its sole cost and expense, keep the Premises in a clean condition and in good order, condition and repair throughout the Term, reasonable wear and tear excepted. Lessee's maintenance of the Premises shall consist of, as reasonably necessary, the inspection, servicing and repair of all improvements, including pest control, landscaping and grounds maintenance.

8.2 Damage to Lessor Property. Any real or personal property of Lessor damaged or destroyed by Lessee (or its agents, contractors, employees, managers and representatives) as a result of Lessee's use or occupancy of the Premises shall be promptly repaired or replaced by Lessee to the reasonable satisfaction of Lessor; provided however, that Lessor acknowledges and agrees that Lessor's real property will be permanently altered, changed and modified as a result of the development and use of the Premises, and Lessor hereby consents thereto, and agrees that such development and use of the Premises as permitted in accordance with this Lease shall not constitute waste, damage or destruction to Lessor's real property. Lessor also approves of Lessee demolishing any and all improvements located on or under the Premises.

8.3 Trash Removal. Lessee shall at all times keep the Premises in a clean, safe, sanitary and orderly condition and shall keep such area reasonably free of all trash and debris, and in any event in compliance with all applicable laws and ordinances. Lessee shall be responsible for all trash removal from the Premises and Lessee shall deposit all trash and debris only at collection stations located on or in proximity to the Premises, in accordance with City code.

8.4 Emergency Repairs. Within FIFTEEN (15) days of the Effective Date, Lessee shall provide

Lessor with a list of names and telephone numbers for 24-hour emergency contact for the Premises. Lessee shall promptly provide Lessor with updated lists and changes as necessary.

9. ASSIGNMENT, SUBLETTING AND OTHER TRANSFERS.

9.1 Assignment.

9.1.1 Consent Required. Subject to Lessee's rights under Section 24, Liens and Mortgages, Lessee may not transfer or assign ("**Transfer**") its interest in this Lease or any right or interest hereunder without the prior consent of Lessor, which consent may not be unreasonably withheld, delayed or conditioned. Lessor will have FORTY-FIVE (45) days following receipt of a written request by Lessee for approval of a Transfer to either approve or disapprove the same. If Lessor disapproves, Lessor shall provide Lessee with a reasonably-detailed explanation for Lessor's disapproval. If Lessor fails to respond within such FORTY-FIVE (45)-day period Lessee may give a second notice to Lessor requesting approval of a Transfer, on which the following language must appear in bold print: "**FAILURE TO RESPOND TO THIS NOTICE WITHIN FIVE (5) BUSINESS DAYS FROM ITS RECEIPT SHALL RESULT IN THE LESSEE'S PROPOSED TRANSFER BEING DEEMED APPROVED**." If Lessor fails to respond in writing (in the manner described above) to any matter in such second notice within FIVE (5) business days following delivery of such notice, Lessee's proposed Transfer shall be deemed to have been approved by Lessor. If Lessor disapproves a request for approval and sets forth the reason for its disapproval, then Lessee may resubmit a revised proposal for a Transfer for review and approval. This cycle will repeat itself until Lessor either approves the request or is deemed to have approved the same. Notwithstanding the foregoing, however, Lessee may assign or encumber its leasehold interest, including any title to any improvements, as security in conjunction with or as part of one or more leasehold mortgages or deeds of trust, including assignments by means of a foreclosures or trustee's sales thereunder without Lessor's consent. In the case of an assignment (other than an assignment or encumbrance as security), the assignee must expressly assume in writing all of Lessee's obligations under this Lease from and after the date of such assignment.

9.1.2 Deemed Transfers. For the purposes of this Lease, a Transfer shall be deemed to include the following: (i) the transfer of any ownership interest in Lessee resulting in a change in the present control of Lessee by the person or persons owning a majority of the ownership interest thereof as of the date of this Lease; provided, however, if Lessee is a corporation whose stock is traded on a nationally recognized stock exchange, the transfer of Lessee's stock shall not constitute a Transfer requiring Lessor's consent; and (ii) the sale of greater than FORTY-NINE PERCENT (49%) or more in value of the assets of Lessee, whether in a single transaction or a series of transactions.

9.2 Subletting.

9.2.1 Lessee may sublease all or portions of the Premises if the following conditions are met:

(a) The sublease and any amendments or modifications thereto are approved in advance and in writing by Lessor (which approval shall not be unreasonably withheld, delayed or conditioned), or is/are in a form which shall have been previously approved in writing (except for changes that do not materially impact Lessor's rights and interests) by Lessor. If a pre-approved form is used, Lessor's advance approval of the actual sublease and any amendments or modifications thereto is not required. Lessor will have FORTY-FIVE (45) days with respect to a new sublease, or FIFTEEN (15) days with respect to amendments or modifications to a sublease, following receipt of a written request by Lessee for approval of a Transfer to either approve or disapprove the same. If Lessor disapproves, Lessor shall provide Lessee with a reasonably-detailed explanation for Lessor's disapproval. If Lessor fails to respond within such FORTY-FIVE (45)-day or FIFTEEN (15)-day period, as the case may be, Lessee may give a second notice to Lessor requesting approval of a Transfer, on which the following language must appear in bold print: "**FAILURE TO RESPOND TO THIS NOTICE WITHIN FIVE (5) BUSINESS DAYS FROM ITS RECEIPT SHALL RESULT IN THE**

LESSEE'S PROPOSED TRANSFER BEING DEEMED APPROVED." If Lessor fails to respond in writing (in the manner described above) to any matter in such second notice within FIVE (5) business days following delivery of such notice, Lessee's proposed sublease, amendment or modification, as the case may be, shall be deemed to have been approved by Lessor. If Lessor disapproves a request for approval and sets forth the reason for its disapproval, then Lessee may resubmit a revised proposal for a Transfer for review and approval. This cycle will repeat itself until Lessor either approves the request or is deemed to have approved the same.

(b) Rent for subleased premises shall not be less than fair market value unless otherwise approved in writing by Lessor.

(c) The sublease(s) and sublessee(s) shall at all times be subject to the terms and conditions of this Lease.

(d) The permitted uses of the Premises under any sublease shall be the same as that permitted under this Lease. Sublessees shall agree in the sublease not to engage in any Prohibited Use.

(e) The term of any sublease shall not extend beyond the stated expiration of this Lease.

(f) Except for the payment of a security deposit, the sublessee under such sublease shall not pay rent more than SIX (6) months in advance of its due date under the sublease.

9.2.2 Upon request from Lessee and/or any sublessee, Lessor shall enter into a Non-Disturbance and Attornment Agreement (in form and substance reasonably acceptable to Lessor, Lessee, sublessee and any applicable Mortgagee of Lessee or sublessee) so long as (i) the conditions of Section 9.2.1 have been met; (ii) the sublessee is not then in default beyond an applicable notice and cure period under the sublease and there is no existing Event of Default under this Lease; and (iii) the sublessee does not have a history of five (5) or more documented events of noncompliance with the *Airport Rules and Regulations* or *Airport Minimum Standards*. All reasonable legal fees incurred by Lessor in connection with any reasonably necessary third-party legal counsel review and approval of a Non-Disturbance and Attornment Agreement shall be paid by Lessee or sublessee.

9.2.3 Lessee shall not permit any sublessee unescorted access to the secured areas of the Airport unless and until the sublessee has obtained its own valid Airport security clearance and access credentials from Lessor. Lessee acknowledges that it may take THIRTY (30) calendar days or more to process sublessee for security clearance and access credentials.

9.2.4 Lessee shall submit a copy of each fully executed sublease to Lessor as soon as possible, but no later than FIVE (5) business days after Lessee receives the fully executed sublease.

9.3 Non-Disturbance. Lessor agrees, for the benefit of all subtenants of all or any part of the Premises, that if this Lease or Lessee's right to possession of the Premises is terminated for default or otherwise, all subleases of all or any part of the Premises, except any sublease to an Affiliate of Lessee, shall continue in full force and effect, notwithstanding the termination, as direct leases between Lessor and the subtenants and all such subtenants shall, upon request, attorn in writing to Lessor.

10. SIGNS.

Lessee may install on the Premises, including the Improvements, one or more signs, including signs identifying its business and, if Lessee so desires, a monument sign on the Premises; provided, however, that the general type, size, and location of such sign(s) shall conform to Lessee's Comprehensive Sign Plan, be approved in writing by Lessor in advance of installation, which approval may not be unreasonably withheld, conditioned

or delayed, and be subject to any signage rules, codes and/or regulations of any governmental authority.

11. DEFAULT; TERMINATION BY LESSOR.

11.1 Events of Default. Each of the following shall constitute a material default of this Lease by Lessee ("**Event of Default**"):

11.1.1 Failure to pay any installment of Base Rent or other amount due from Lessee hereunder, provided that Lessee does not cure such failure within TEN (10) business days after delivery by Lessor of a written notice of such failure.

11.1.2 Failure to perform any of its other obligations under this Lease or failure to perform any of its obligations as a "Lessee" under the Declaration (as defined in Section 44 below), as such obligations relate to the Premises, provided that Lessee does not cure such failure within THIRTY (30) calendar days after delivery by Lessor to Lessee of a written notice of such default; provided, however, if a cure of the default reasonably requires more than THIRTY (30) calendar days to complete, then the time to cure shall be extended so long as the cure is being diligently pursued.

11.1.3 The filing of any mechanic's, materialmen's or other lien or any kind against the Premises because of any act or omission of Lessee which lien is not discharged, by bonding or otherwise, within THIRTY (30) calendar days of receipt of actual notice thereof by Lessee.

11.1.4 The Transfer or attempted transfer of any interest in the Lease to any transferee in violation of Section 9, provided that Lessee does not cancel or otherwise negate such Transfer or attempted transfer within THIRTY (30) calendar days after delivery by Lessor to Lessee of a written notice of such default.

11.1.5 Failure to pay its Proportionate Share of any Common Area Assessment in accordance with the Declaration as provided in Section 44 below, provided that Lessee does not cure such failure within TEN (10) business days after delivery by Lessor to Lessee of a written notice of such failure.

11.2 Lessor's Remedies. Upon the occurrence of an Event of Default under this Lease, Lessor may, without prejudice to any other rights and remedies available to a Lessor at law, in equity or by statute, exercise one or more of the following remedies, all of which shall be construed and held to be cumulative and non-exclusive:

11.2.1 Terminate this Lease and re-enter and take possession of the Premises; or

11.2.2 Without terminating this Lease, re-enter and take possession of the Premises; or

11.2.3 Without such re-entry, recover possession of the Premises in the manner prescribed by any statute relating to summary process, and any demand for Base Rent, and any and all notices to quit, or other formalities of any nature to which Lessee may be entitled, are hereby specifically waived to the extent permitted by law; or

11.2.4 With or without terminating this Lease, Lessor may re-let the Premises or any portion thereof.

Lessor agrees that Lessor's right to re-enter the Premises under Arizona Revised Statutes Section 33-361 and other similar rights shall arise after, and only after, the applicable notice and cure or grace periods under this Lease have been given and expired without such default or failure having been cured by Lessee.

11.3 No Implied Termination. Lessor shall not be deemed to have terminated this Lease unless

Lessor shall have notified Lessee in writing that it has so elected to terminate this Lease. Except for Lessor's negligence or willful misconduct, Lessee hereby waives all claims based on Lessor's reentering and taking possession of the Premises, or removing and storing the property of Lessee, and Lessee shall reimburse Lessor for all reasonable costs incurred by Lessor occasioned thereby. No such reentry shall be considered or construed to be a forcible entry by Lessor.

11.4 Lessor's Current Damages. Upon the occurrence and during the continuance of an Event of Default, Lessor is authorized to make such repairs, refurbishments or improvements to the Premises as may be necessary for the purpose of attempting to re-let the Premises, and the reasonable costs and expenses incurred in respect of such repairs, redecorating, refurbishments and improvements shall be paid by Lessee to Lessor within TEN (10) business days after receipt of Lessor's statement. If Lessor exercises any of the remedies stated above, Lessor shall be entitled to recover from Lessee all actual damages incurred by Lessor by reason of the Event of Default, which shall include, without limitation, (i) the equivalent of the amount of the present value of Base Rent and all other payments which would be payable under this Lease by Lessee for the remainder of the Term as if this Lease were still in effect, less (ii) the net proceeds of any re-letting by Lessor after deducting all of Lessor's reasonable expenses in connection with such re-letting, which shall include, without limitation, repossession costs, repairs, redecorating, refurbishments or improvements to the Premises, brokerage commissions, attorneys' fees, and legal expenses. Lessee shall pay such current damages to Lessor, in the amount set forth in the preceding sentence ("**Deficiency**"), in monthly installments on the days on which the Base Rent would have been payable under this Lease as if this Lease were still in effect. In no event shall Lessee be liable for punitive, consequential or speculative damages under this Lease. Lessor agrees to satisfy its obligations to mitigate its damages.

11.5 Lessor's Final Damages. At any time after an Event of Default, whether or not Lessor shall have collected any monthly Deficiency as set forth above, Lessor shall be entitled to recover (without duplication) from Lessee, and Lessee shall pay to Lessor, promptly on demand, as Lessor's final damages for the applicable Event of Default, the sum of (a) the then present worth (at a discount at the rate of SIX PERCENT (6%) per annum) of (i) the aggregate of the Base Rent and all other amounts to be paid by Lessee hereunder for the unexpired portion of the Term of this Lease (assuming this Lease had not been terminated), less (ii) the amount of Rent and any losses that could have been reasonably avoided, plus
(b) reasonable repossession costs, reasonable Lessor's expenses in connection with any attempts it may have made to re-let the Premises (which shall include, without limitation, repairs, refurbishments or improvements to the Premises and brokerage commissions), reasonable attorneys' fees, reasonable legal expenses, and all other actual damages incurred by Lessor as a result of such Event of Default.

11.6 No Waiver by Lessor. No waiver by Lessor of any breach or default by Lessee in the performance of its obligations under this Lease shall be deemed to be a waiver of any subsequent default by Lessee in the performance of any of such obligations, and no express waiver shall affect an Event of Default in a manner other than as specified in said waiver. The consent or approval by Lessor to or of any act by Lessee requiring Lessor's consent or approval shall not be deemed to waive or render unnecessary Lessor's consent or approval to or of any subsequent similar acts by Lessee.

11.7 Content of Default Notice. Any default notice tendered to Lessee hereunder shall be deemed to be sufficient if it reasonably describes the nature of such default, and is made in accordance with Section 20 herein.

11.8 Limitation on Exercise of Termination Remedy by Lessor. Notwithstanding anything to the contrary in Section 11.2 hereinabove, if an Event of Default occurs, Lessor shall not have the remedy of terminating this Lease or of taking possession of the Premises unless: (i) the Event of Default consists of a failure to pay Base Rent or other amounts owed to Lessor; or (ii) Lessor has no other remedy that is adequate to protect Lessor's interests. Nothing in this Section 11 shall limit the exercise of any such other remedy.

11.9 Waiver of Landlord's Lien. Lessor hereby waives all statutory or common law landlord's lien rights with respect to personal property located on the Premises.

12. [RESERVED].

13. INDEMNIFICATION.

13.1 Lessee's Indemnity. Except for the actions and omissions of Lessor and its agents, contractors, employees, managers and representatives, to the fullest extent permitted by law, Lessee hereby agrees to defend, indemnify and hold harmless Lessor and its members, elected or appointed officials, agents, contractors, subcontractors, boards, commissions and employees (hereinafter referred to collectively as the "Lessor" for purposes of this Section 13.1 for, from and against any and all third-party claims, causes of action, liability, suits, litigation (including reasonable attorney's fees and other costs of investigation and litigation), actions, losses, damages or claims of any nature whatsoever to the extent such arise out of or in connection with (i) any accident, injury or actual damages occurring within the Premises during the Term caused by Lessee or its agents, employees, contractors, or subcontractors, or (ii) any negligent act or omission of Lessee or its agents, employees, contractors, or subcontractors (hereinafter referred to collectively as "Lessee" for purposes of this Section 13.1) on the Property or the Airport and which result directly or indirectly in the injury to or death of any persons or the damage to or loss of any property or other damages or losses to Lessor, or (iii) the failure of Lessee to comply with any provisions of this Lease. This indemnification shall exclude responsibility for any damages and for claims arising by reason of the acts or omissions of Lessor or its employees, contractors or agents.

13.2 Lessor's Indemnity. Except for the actions and omissions of Lessee and its agents, contractors, employees, managers and representatives, to the fullest extent permitted by law, Lessor hereby agrees to defend, indemnify and hold harmless Lessee and its members, elected or appointed officials, agents, contractors, subcontractors, boards, commissions and employees (hereinafter referred to collectively as the "Lessee" for purposes of this Section 13.2) for, from and against any and all third-party claims, causes of action, liability, suits, litigation (including reasonable attorney's fees and other costs of investigation and litigation), actions, losses, damages or claims of any nature whatsoever to the extent such arise out of or in connection with (i) any negligent act or omission or intentional misconduct by Lessor or its agents, employees, contractors, or subcontractors (hereinafter referred to collectively as "Lessor" for purposes of this Section 13.2) on the Property or the Airport, and which result directly or indirectly in the injury to or death of any persons or the damage to or loss of any property or other damages or losses to Lessee, or (ii) the failure of Lessor to comply with any provisions of this Lease. This indemnification shall exclude responsibility for any damages and for claims arising by reason of the acts or omissions of Lessee or its employees, contractors or agents.

13.3 Lessor's Damage to Improvements. Lessor shall be responsible and liable for any damage to any Improvements or alterations on the Property to the extent caused by Lessor or its agents, employees, contractors or subcontractors, and Lessor shall promptly repair any damage caused by Lessor or its agents, employees, contractors or subcontractors.

14. ENVIRONMENTAL PROTECTION.

14.1 Definitions. Unless the context shall clearly require otherwise, the terms defined in this Section 14.1 shall, for all purposes of this Lease and of any agreement amendatory hereof or supplemental hereto, have the meanings herein specified, with the following definitions to be equally applicable to both the single and plural forms of any of the following:

14.1.1 *Environmental Laws*. The term "Environmental Laws" shall mean any one or all of the following, as the same are amended from time to time: the *Comprehensive Environmental Response, Compensation, and Liability Act*, 42 USC Section 9601 et seq.; the *Resource Conservation and Recovery Act*, 42 USC Section 6901, et seq.;

the *Toxic Substances Control Act*, 15 USC Section 2601 et seq.; the *Safe Drinking Water Act*, 42 USC Section 300f et seq.; the Clean Water Act, 33 USC Section 1251 et seq.; the *Clean Air Act*, 42 USC Section 7401 et seq.; the *Arizona Hazardous Waste Management Act*, A.R.S. Section 49-921 et seq. the *Arizona Environmental Quality Act*, A.R.S. Title 49, as amended; and all regulations thereunder and any other laws, regulations and ordinances (whether enacted by the local, state or federal government) now in effect or hereafter enacted that deal with the regulation or protection of the environment, including the ambient air, ground water, surface water, and land use, including substrata land, or that govern the use of hazardous materials, hazardous waste and hazardous substances and petroleum products.

14.1.2 *Hazardous Material*. The term "Hazardous Material" shall mean any toxic or hazardous material, substance or waste, or any pollutant or contaminant as defined or regulated pursuant to any Environmental Law and petroleum products. For purposes of this definition, petroleum includes petroleum-based substances comprised of a complex blend of hydrocarbons derived from crude oil through processes of separation, conversion, upgrading and finishing (e.g., distillate fuel oils, petroleum solvents and used oils).

14.2 [Intentionally Omitted].

14.3 Environmental Compliance.

14.3.1 Lessee shall, at the Lessee's own expense, comply with all present and hereafter enacted Environmental Law, including any amendments thereto, affecting Lessee's activities on and property interest in the Premises during the period of Lessee's occupancy of thereof under this Lease. To the extent that Lessor, or any Lessor's employees, agents or contractors, conducts any activities on the Premises during the period of Lessee's occupancy, Lessor shall, at Lessor's own expense, comply with all present and hereafter Environmental Law, including any amendments thereto, affecting any of Lessor's activities on the Premises.

14.3.2 Lessee shall not cause or permit any Hazardous Material to be brought upon, kept or used in or about the Premises or the Airport by Lessee's agents, employees, contractors or invitees in violation or threatened or suspected violation of any Environmental Law. The Parties recognize and agree that Lessee may bring on the Premises and Airport and use Hazardous Material that is ordinarily and customarily used in the conduct of Lessee's permitted activities under this Lease, provided that such use shall comply fully with all applicable Environmental Laws. Lessor shall not cause or permit any Hazardous Material to be brought upon, kept, or used in or about the Premises or by Lessor's agents, employees, contractors for any activity Lessor conducts on the Premises during Lessee's occupancy, without prior notification to and approval by Lessee (which shall not be unreasonably withheld), and any such use or presence shall be in compliance with Environmental Law.

14.3.3 If Lessee desires and receives written authorization from Lessor to install any underground storage tanks ("**USTs**") on the Premises or elsewhere on the Airport, Lessee shall submit the plans for such USTs to Lessor for prior written approval and shall comply with all applicable Environmental Laws related thereto, including Title 40, Code of Federal Regulations, Part 280, as adopted by the State of Arizona ("**Part 280**"), and Lessee shall be the owner of such USTs for statutory purposes. Installation of USTs shall comply with the "code of practice" set forth in Part 280. Lessee is solely responsible for the design, construction, installation, operation, monitoring, inspection, repair and maintenance of any and all USTs, including any connected piping and/or dispensing apparatus. Lessee shall provide to Lessor a copy of the Arizona Department of Environmental Quality *Notification of Underground Storage Tank Registration* that Lessee submits to the state. All USTs shall meet or exceed the tank performance standard for USTs installed after December 22, 1998, including corrosion protection, leak detection and spill/overflow protection. Any UST that stores flammable and combustible liquids shall meet the provisions of NFPA 30, *Flammable and Combustible Liquids Code*. Records demonstrating compliance with release detection requirements, including product inventories, calibration and maintenance, sampling, tightness testing and any other records, fees and taxes required by the state or federal governments shall be the responsibility of Lessee. Upon the expiration of this

Lease, Lessee shall remove all USTs in compliance with all UST closure requirements under all applicable Environmental Laws in effect at that time unless otherwise allowed by Lessor.

14.4 Indemnification. To the fullest extent permitted by law, Lessee shall indemnify, defend (with counsel reasonably acceptable to Lessor), protect and hold harmless Lessor and its employees and agents for, from and against any and all liability, loss, damage, expense, penalties and legal and investigation fees or costs, arising from or related to any claim or action for injury, liability, or damage to persons or property and any and all claims or actions brought by any person, entity or governmental body, alleging or arising in connection with contamination of the environment or violation of any Environmental Law or other statute, ordinance, rule, regulation, judgment or order of any government or judicial entity ("**Environmental Damages**") which are incurred or assessed as a result of any of Lessee's activities or operations on the Premises or Airport. This obligation includes, but is not limited to, all costs and expenses related to cleaning up the property, land, soil and underground or surface water as required under the law. Lessee's obligations and liabilities under this Section 14.4 shall survive the termination of this Lease. The indemnification of Lessor by Lessee as described above includes, without limitation, costs incurred in connection with any investigation of site conditions or any cleanup, remedial, removal or restoration work required by any federal, state or local governmental agency or political subdivision. Lessor reserves the right to seek injunctive relief as may be permitted under law and equity. This Section 14.4 explicitly excludes Lessee duty, liability or indemnity to Lessor for any claims or Environmental Damages of any kind whatsoever arising from or in connection with any contamination of any kind existing on the Premises prior to the Effective Date, except and only to the extent known contamination is exacerbated by Lessee or unknown contamination is exacerbated by Lessee's negligence.

14.5 Remediation. Without limiting the foregoing, if the presence of any Hazardous Material during the Term of this Lease caused or permitted by Lessee to be first brought on the Airport or Premises upon or after the Effective Date results in any Release on the Airport or Premises in violation of any Environmental Law, Lessee shall promptly take action to remediate the affected property at its sole expense as necessary to return the Airport or Premises to the condition existing prior to the introduction of any such Hazardous Material to the Airport or Premises; provided that Lessor's approval of such actions shall first be obtained, which approval shall not, except in an emergency, be unreasonably withheld so long as such actions would not potentially have any material adverse long-term effect on the Airport and Lessee is not under administrative or court order related to such remediation action. Notwithstanding Lessor's approval pursuant to this Section 14.5, Lessor is not responsible for directing or managing any remediation action. For purposes of this Section 14.5, the term "Release" means any releasing, spilling, leaking, pumping, pouring, emitting, emptying, discharging, injecting, escaping, leaching, disposing, or dumping. This Section 14.5 also applies to Lessee's remediation of any contamination of any kind existing on the Premises or Airport prior to the Effective Date, including any such contamination that may be first discovered after the Effective Date but not caused by Lessee, except and only to the extent known contamination is exacerbated by Lessee or unknown contamination is exacerbated by Lessee's negligence.

14.6 Governmental Submittals. Lessee shall, at Lessee's own expense, make all submissions to, provide all information to, and comply with all requirements of the appropriate governmental authority ("**Government**") under the Environmental Laws. Should the Government determine that a site characterization, site assessment and/or cleanup plan should be prepared and/or that a cleanup should be undertaken because of any spills or discharges of Hazardous Material by reasons of Lessee's activities or actions at the Airport which occur during the Term of this Lease, then Lessee shall, at the Lessee's own expense, prepare and submit the required plans and financial assurances, and carry out the approved plans.

14.7 Information Sharing.

14.7.1 Lessee shall immediately notify Lessor of any of the following: (i) Lessee's receipt of any notification from any governmental entity either charging or informing Lessee that it will be charged with a significant violation of Environmental Law (as defined below), and (ii) any significant change in Lessee's

activities on the Premises that is reasonably likely to adversely change Lessee's obligations or liabilities under the Environmental Laws. In addition, Lessee agrees to provide Lessor with non-privileged copies of documents reflecting the physical condition of the Premises, including but not limited to, environmental testing of soils and groundwater, and existing, non-privileged information reasonably requested by Lessor to determine the applicability of the Environmental Laws to the Premises, or to assist in the response to any governmental investigation or claim of liability by third parties which is related to environmental contamination of the Premises, to the extent that such investigations or claims are related to Lessee's activities thereon. A "significant violation of Environmental Law" shall be any violation that requires more than ONE HUNDRED EIGHTY (180) calendar days to resolve.

14.7.2 Lessee shall install on any UST that it is permitted to install pursuant to Section 14.3.3, a method or a combination of methods for Release detection that can detect a Release from any portion of the UST and any connected underground piping. Lessee shall immediately notify Lessor's Operations and Maintenance Department upon discovering a Release or Suspected Release of any amount of material that is stored inside a UST. For purposes of this Section, a "Suspected Release" is any discovery of released Hazardous Material at the UST site or surrounding area, erratic behavior of Hazardous Material dispensing equipment, the sudden loss of a Hazardous Material, an unexplained presence of water in the UST, or when monitoring indicates that a Release has occurred. In the case of inventory control, Lessee shall notify the Lessor's Operations and Maintenance Department when the second consecutive month of inventory reconciliation data indicates that there is a discrepancy in the figures recorded.

14.8 Sublease. Lessee shall insert provisions substantially identical to the provisions of this Section 13.1 in any sublease agreement or contract by which it grants a right or privilege to any person, firm, corporation or other entity under this Lease.

14.9 Actions of Lessee. The activities or actions of Lessee under this Section 13.1 shall include the activities or actions of Lessee's officers, directors, employees, agents, contractors, invitees and successors.

14.10 Clean Water Act; NPDES Permits and SWPPPs. Without in any way limiting the foregoing, Lessee shall comply with all Environmental Laws regarding discharges to water and land, including, without limitation, obtaining and complying with an individual National Pollutant Discharge Elimination System (NPDES) permit, or requesting coverage under and complying with any applicable Multi-Sector General Permit ("**MSGP**"). If applicable, Lessee shall also prepare and comply with a site-specific MSGP with an individual Storm Water Pollution Prevention Plan ("**SWPPP**") or any revisions to a SWPPP, with respect to Lessee's operations or activities on the Premises or Airport. Proof of individual compliance shall be provided in the form of both the Lessee's Notice of Intent ("**NOI**") that has been received by the Arizona Department of Environmental Quality ("**ADEQ**") and the individual Arizona Multi-Sector General Permit (AZMSGP) number associated with the NOI, within the times prescribed by law.

14.11 Environmental Assessments.

14.11.1 If, during the Term of this Lease, any of Lessee's USTs are suspected of or known to be leaking, Lessee shall perform, or cause to be performed, a site characterization of the Premises and/or UST site using all appropriate sections of the LUST Site Characterization Manual dated January 15, 1999, or the most current edition, including tables 1 through 6, as applicable ("**Site Characterization**").

14.11.2Within THIRTY (30) calendar days immediately preceding the expiration of this Lease or within THIRTY (30) calendar days of any earlier termination of the Lease, Lessee shall:

(a) Deliver to Lessor: (i) a Phase I environmental site assessment that conforms to the standards set forth in 42 USC § 9601(35)(B), as amended by Pub. L. 107-118 (Jan. 11, 2002), section 223(2), and as may be further amended, and any regulations thereunder; and (ii) an environmental compliance

audit assessing the status of regulatory compliance of the Premises and all operations and activities thereon; both prepared by a qualified engineer licensed by the State of Arizona; and

(b) In the event Lessee installs any USTs upon the Premises or elsewhere on the Airport, perform or cause to be performed a Site Characterization of the Premises in the event there is evidence that there has been or may be a leak or Release of the UST contents; and

(c) If either the assessment described in Section 14.11.2(a)(i) above or the Site Characterization described in Section 14.11.2(a)(ii) above identifies any "recognized environmental condition," or any other condition indicating a known or potential liability, including, but not limited to, a known or potential violation of any Environmental Law or a past, present, or material threat of a future release of a hazardous substance or a petroleum product into the environment, Lessor reserves the right, at Lessor's sole discretion, to require Lessee to conduct, at Lessee's sole expense and with a scope of work subject to Lessor's approval, further reasonable investigations and reasonable remediation.

14.12 Protective Devices and Plans. If Lessee is required by the City to estimate the possible constituents of sanitary sewer discharges in order that the City may define certain discharge limitations for the Premises, Lessee shall complete and return an *Industrial Wastewater Discharge Questionnaire* ("**Questionnaire**") to the City and promptly provide Lessor with updates to the Questionnaire as they arise. Also, if the City so requires, Lessee shall install and maintain appropriate protective devices to prevent accidental discharge of any Hazardous Material into domestic or industrial drains on or near the Premises and elsewhere on the Airport, as appropriate, and for any other material for which a slug load discharge could pollute the Airport's storm water discharge or disrupt operations at the sewage treatment plant serving the Premises. Lessee shall post a notice in a prominent place on the Premises advising employees what actions to take and whom to call in the event of said discharge, and shall ensure that all employees of Lessee are trained with regard to the spill protection plan hereinafter referenced. Lessee also shall provide Lessor with immediate notice of any spill.

14.13 Right to Enter Premises. In addition to the rights afforded to Lessor in Section 19, this Lease specifically includes the right of the United States Government, the Environmental Protection Agency (the EPA), ADEQ and the Arizona Department of Occupational Safety and Health (ADOSH) to enter the Premises upon reasonable notice to Lessee for purposes of: (i) inspecting Lessee's compliance with environmental, occupational safety and health laws and regulations, whether or not such party is responsible for enforcing such laws; (ii) conducting environmental investigation or remediation, including, without limitation, performing tests and surveys, drillings, test-pitting, borings, compiling data and/or records, and other activities related to environmental investigation; and (iii) carrying out remedial or removal actions as required or necessary under applicable laws, including, without limitation, installing monitoring wells, pumping wells and/or treatment facilities. Lessee shall have no claim against Lessor for any entries by the United States, EPA, ADEQ, Arizona ADOSH, or any officer, agent, employee or contractor thereof.

14.14 U.S. Air Force Use and Remedial Action.

14.14.1 The Parties assume no liability or responsibility for environmental impacts and Environmental Damages or claims of any kind whatsoever caused by or resulting from the U.S. Air Force's use of Hazardous Material on any portion of the Airport, including the Premises, prior to the Effective Date, and have no obligation under this Lease to undertake the defense of any claim or action, whether in existence now or brought in the future, solely arising out of the use of or release of any Hazardous Material or deposits of solid waste on or from any part of the Airport, including, but not limited to, the Premises, even if such claims or contamination are first discovered or made after the Effective Date. Further, the Parties have no obligation under this Lease to undertake environmental response, remediation, or cleanup relating to any contamination caused by or related to such use or release. For purposes of this Section 14.14, "defense" or "environmental response, remediation, or cleanup" shall include liability and responsibility for the costs of damage, penalties, legal and investigative services relating to such use or release. The terms, "Occupation" or "Use" shall mean

any activity or presence (in or upon) such portion of, or such building, facility or other improvement on the Premises.

14.14.2 Pursuant to Section VII.E.3 of the Deed (as defined herein), the U.S. Air Force warrants and covenants that all remedial action necessary to protect human health and the environment with respect to hazardous substances remaining on the Airport, including the Premises, has been completed prior to the date of the Deed and, further, any remedial action found to be necessary after the date of the Deed shall be conducted by the U.S. Air Force; provided, however, that the foregoing covenant does not apply where Lessor or Lessee is a potentially responsible party with respect to any portion of the Premises or the Airport.

14.15 Cleanup Requirements. Lessee agrees that Lessor assumes no liability to Lessee should Hazardous Material cleanup or related requirements, whether imposed by law, regulatory agencies, the U.S. Air Force or Department of Defense cause delays or interferes with Lessee's use of the Premises. Lessee shall have no claim against Lessor or the United States or any officer, agent, employee or contractor thereof on account of any such interference whether due to entry, performance of remedial or removal investigations, or exercise of any right with respect to the Federal Facilities Agreement (FFA) or the Installation Restoration Program (IRP) or under this Lease or otherwise. Lessee agrees to comply with the provisions of any health or safety plan in effect under the IRP or any hazardous substance remediation or response agreement with environmental regulatory authorities during the course of any of the above described response or remedial actions. Any inspection, survey, investigation, or other response or remedial action conducted by Governmental Authorities or Lessor shall, to the extent practicable, be coordinated with representatives designated by Lessee.

14.16 Spill Protection Plan. In the event Lessee undertakes any type of manufacturing, maintenance or other activities on the Premises involving the use or generation of any Hazardous Material regulated by Hazardous Material Laws, Lessee shall have a plan for responding to Hazardous Material, fuel, and other chemical spills prior to commencement of activities on the Premises and other approved Airport locations. Such plan shall comply with all applicable requirements of said plan which shall be updated from time to time or as may be required to comply with changes in site conditions or applicable requirements, and shall be approved by all agencies that are obligated by law to approve such plan. Such plan shall be independent of Lessor's spill prevention and response plans, if any. Lessee shall not rely on use of Lessor or Lessor personnel or equipment in execution of its plan. Lessee shall file a copy of the plan and amendments thereto with Lessor's Environmental and Archeological Coordinator prior to the date that Lessee commences any manufacturing, maintenance or other activities on the Premises involving the use or generation of any Hazardous Material regulated by Hazardous Material Laws. Notwithstanding the foregoing, should Lessor provide any personnel or equipment, whether for initial fire response and/or spill containment, on the request of Lessee, or because Lessee was not, in the opinion of Lessor, conducting fire-fighting, containment or timely cleanup actions, Lessee agrees to reimburse Lessor for its actual costs in accordance with all applicable laws and regulations, except to the extent that Lessor was responding to conditions caused by events occurring at the Airport (not including the Premises) or by the negligence or omission of Lessor or its employees, agents or contractors.

14.17 Wells. Lessee shall not install any drinking water or other wells in any location on the Premises without the prior written approval of Lessor, except to the extent that the installation of a monitoring well is required by Governmental Authorities.

14.18 Surface Disturbances. After construction of Lessee's improvements on the Premises, if any, either in the future or as otherwise provided herein, Lessee shall not conduct any subsurface excavation, digging, drilling or other disturbance of the surface other than what is usual and customary for the anticipated uses without the prior written approval of Lessor, which shall not be unreasonably withheld, conditioned or delayed.

14.19 Later Discovered Hazmat. If any Hazardous Material is newly discovered on a portion of the Property after the Effective Date that: (a) (i) were not placed on or introduced to the Property by Lessee, and (ii) were present on the Premises prior to the Effective Date (collectively, "**Later-Discovered, Pre- Existing**

Hazmat"); and (b) such Later-Discovered, Pre-Existing Hazmat will cause Unavoidable Delay in the construction of Improvements; Lessee shall immediately notify Lessor and cease development activity in the impacted area of the Premises, and Lessee shall have the right to either (a) conduct such investigations and remedial actions as necessary under applicable Environmental Law and continue development activity as the remedial process allows (and reserve any rights it may have to seek whatever compensation it is entitled to recover), if Lessor does not agree, within SEVEN (7) business days of receiving notice contemplated under this Section, to promptly investigate and remediate the detected contamination in accordance with Environmental Law, and on a schedule and in a manner that does not interfere with Lessee's development, use or construction plans, or (b) terminate this Lease upon written notice to Lessor.

15. PROTECTION OF WETLANDS.

Lessee shall minimize the destruction, loss, or degradation of any wetlands located on the Premises. Lessor believes there are no wetlands existing on the Premises as of the Effective Date. However, before locating new construction in wetlands, if any exist, Lessee shall contact Lessor and the permitting authority and obtain a permit or waivers under Section 404 of the Clean Water Act. For purposes of this Section 15, the term, "new construction," includes structures, facilities, draining, dredging, channeling, filling, diking, impounding, and related activities.

16. SPECIAL PROVISIONS.

16.1 Lessee shall comply with all applicable Federal, State, and local occupational safety and health regulations.

16.2 Lessee shall be responsible for determining whether it is subject to State and local sanitation, licensing, building code or building permit requirements and whether or not it requires a permit to do business and for compliance with them to the extent they are applicable.

17. INSURANCE.

17.1 Coverage Required. Lessee shall procure and maintain, or cause to be procured and maintained, the following types and amounts of insurance with respect to the Premises:

17.1.1 *Builders Risk* insurance covering the insured's premises and all replacements and/or additions thereto for their full insurable value plus ten percent (Cost + 10%) on a "replacement cost" basis with an ISO Special Causes of Loss form or equivalent required until completion of construction of the improvements upon the Premises. Builder's Risk Insurance shall be in place during active construction of the Improvements. Lessor agrees that Builder's Risk Insurance shall be, upon acceptance of the Improvements by the City of Mesa and/or occupancy of the Improvements for the intended use, no longer required in the form of Builder's Risk Insurance and shall be replaced by Lessor's General Liability and Property coverage as placed upon completion of the construction of the Improvements. Lessor agrees to perform this transition without any lapse or gap in coverage.

17.1.2 *Comprehensive General Liability* $5,000,000 per occurrence covering third party bodily injury and property damage on an occurrence basis in an amount not less than, including coverage for "premises/operations", "products and completed operations", "professional", "host liquor" and "blanket contractual liabilities".

17.1.3 *Commercial Auto Liability* - $1,000,000 per occurrence covering all owned, non-owned and hire vehicles operated on the Airport that are assigned to or used in the performance of commercial activities~~, or that are operated within the AOA~~. If any hazardous materials are transported with Airport boundaries in conjunction with the operator's business activities, and MSC-90 Endorsement is required.

17.1.4 *Environmental Coverage* $2,000,000 per occurrence. – covering third party bodily injury and property damage associated with hazardous material storage facilities, tanks, pining, ancillary equipment and containment structures, or structures that are used, controlled, constructed or maintained at the Airport, and including expenses for defense, release mitigation and off-and on-site remediation.

17.1.5 *Personal Property Coverage* – covers all essential personal property (property essential to continued business operations) and all operator improvements made to buildings or facilities on the Airport, including all replacements and./or additions thereto, for their full insurable value (All Risks) on a replacement cost basis, and requires and ISO Special Cause of Loss form. Coverage shall be for risks of direct physical loss or damage, including the perils of Equipment Breakdown/Boiler & Machinery, Flood and Earth Movement. The limit shall be equivalent to at least full replacement cost value of personal property & improvements. Coverage shall be on a replacement cost basis. If there is a coinsurance provision, it shall be waived by an Agreed Amount endorsement. Lessee's policy shall name Lessor as Loss Payee as their interest may appear.

17.1.6 *Worker's Compensation* insurance, as required by law, and *Employer's Liability* insurance in the amount of $1,000,000 covering work-related injuries to employees and others permitted to operate or otherwise conduct business on the Premises.

17.2 Form. Each insurance policy obtained pursuant to this Section, except for *Worker's Compensation and Employer's Liability* policies, shall: (i) name Lessor as a certificate holder and additional named insured via endorsement; (ii) contain a provision that written notice of cancellation or modification thereof shall be given to Lessor not less than THIRTY (30) calendar days before such cancellation or modification takes effect TEN (10) days in case of nonpayment of premium); and (iii) contain a waiver of subrogation in favor of Lessor. Lessee shall not permit any insurance policy to be canceled or modified without Lessor's written consent unless equivalent replacement policies are issued with no lapse in coverage. All policies shall be obtained from insurance companies licensed to do business in the State of Arizona and possessing a rating of at least A – VII or higher from the A.M. Best Company, or an equivalent rating and approved by Lessor.

17.3 Certificates of Insurance. Lessee shall deliver to Lessor a certificate of insurance for each policy required herein to Lessor, in standard Acord or equivalent form, prior to the Effective Date and shall continue to provide such certificates throughout the Term of this Lease.

17.4 Additional Insurance. At any time during the Term of this Lease, Lessor may, if in its reasonable determination the insurance coverage required by this Section 17 is no longer adequate, require Lessee to increase its coverage to commercially reasonable amounts.

17.5 Blanket Insurance. Lessee's insurance obligations under this Lease may be satisfied by means of "blanket" or excess policies.

17.6 Insurance by Lessor. In the event Lessee shall fail to procure any insurance required hereunder, Lessor may, upon written notice to Lessee, procure and maintain any or all of the insurance required of Lessee under this Section. In such event, all costs of such insurance procured and maintained by Lessor on behalf of Lessee shall be the responsibility of Lessee and shall be fully reimbursed to Lessor within TEN (10) business days after Lessor advises Lessee of the cost thereof.

18. SURRENDER OF POSSESSION.

18.1 Condition of Property.

18.1.1 Upon the expiration or earlier termination of this Lease, Lessee's right to occupy the Premises and exercise the privileges and rights granted thereunder shall cease, and Lessee shall peaceably surrender the same and leave the Premises broom clean and in good condition except for normal wear and tear,

casualty (subject to Lessee's obligation under Section 7.7) and condemnation. Lessee shall not be responsible for the removal or remediation of any Hazardous Material that was present on, under or near the Premises prior to occupancy, regardless of the date of discovery of such Hazardous Material, and shall not be responsible for returning the Premises in a better condition than existed on the Effective Date, except as expressly provided hereunder. All trade fixtures, equipment, and other personal property installed or placed by Lessee on the Premises which are not permanently affixed thereto shall remain the property of Lessee, and Lessee shall have the right at any time during the Term of this Lease, to remove the same from the Airport and Lessee shall repair, at its sole cost, any damage caused by such removal. Any property not removed by Lessee within FIFTEEN (15) calendar days of the expiration or earlier termination of this Lease, or revocation of Lessee's right to occupy the Premises, shall become a part of the Premises, and ownership thereof shall vest in Lessor. Lessee shall, however, remain financially liable to Lessor for the cost of repairs to the Premises incurred as a result of Lessor's removal and/or relocation of property formerly belonging to Lessee and not otherwise removed from the Premises, as provided herein, and shall remit to Lessor payment for such costs within TEN (10) business days of Lessee's receipt of Lessor's invoice therefor.

18.1.2 Any trade fixtures, equipment or other property affixed to the Premises by Lessee shall, if required in a written notice to Lessee from Lessor at the time of Lessor's approval of the same, be removed from the Premises by Lessee, at Lessee's expense, within FIFTEEN (15) business days after Lease termination. Should Lessee fail to remove such trade fixtures, equipment or other property within said time, Lessor may remove and dispose of such trade fixtures, equipment or other property at Lessee's expense, and Lessee shall reimburse Lessor for the costs thereof within TEN (10) business days of receipt of Lessor's invoice therefor.

18.2 Holding Over. Lessee shall not remain in possession of the Premises after the expiration or earlier termination of the Term without the express written consent of Lessor. Should Lessee hold over without the express written consent of Lessor, such tenancy shall be at the sufferance of Lessor and not a renewal of the Term. In such case, the Base Rent and all other charges due pursuant to this Lease shall be payable at ONE HUNDRED FIFTY PERCENT (150%) of the amount payable during the last year of the Term, and such tenancy at sufferance shall be subject to every other term, covenant and provision of this Lease. In the event Lessee holds over, Lessee shall be liable for all of Lessor's direct and consequential damages, which shall include, without limitation, costs, fees, expenses, damages and attorneys' fees incurred by Lessor as a result of Lessee's holding over, and damages and expenses incurred by Lessor for its inability to deliver possession of the Premises to a new lessee solely as a result of Lessee's holding over.

19. INSPECTION BY LESSOR.

Lessor may enter upon the Premises at reasonable times during Lessee's normal business hours and upon at least TWO (2) business days' prior written notice to Lessee (except in emergencies, in which event Lessor shall notify Lessee promptly following such emergency entry) for any reasonable purpose, including, but not limited to, compliance with the terms and conditions of this Lease and the exercise of its governmental functions for such activities as fire protection or security. Lessee may accompany Lessor on any Lessor inspections and entries. Lessor shall take reasonable steps to avoid interrupting or disrupting the conduct of business of Lessee on the Premises.

20. NOTICES.

20.1 All notices required or permitted under this Lease shall not be effective unless personally delivered or mailed by certified mail, return receipt requested, postage prepaid, or by reputable commercial overnight courier service, to the following addresses:

TO LESSOR: Phoenix-Mesa Gateway Airport Authority
Attn: Business Development Department
5835 South Sossaman Road

Mesa, Arizona 85212

TO LESSEE: SkyPlus Hotels, Corp
Attn.: Felipe Monroy Torres
2415 E. Camelback Road, Suite 700
Phoenix, AZ 85016

With a required copy to: Serber & Associates, P.A
2875 NE 191 Street, Suite 801
Aventura, FL 33180

20.2 Any notice shall be deemed to have been received TWO (2) business days after the date of mailing, if given by certified mail, or upon actual receipt if personally delivered or if given by reputable commercial overnight courier service. Any Party may designate in writing a different address for notice purposes pursuant to this Section.

21. SEVERABILITY.

Should a court of competent jurisdiction declare any provision of this Lease invalid, the remaining terms shall remain effective.

22. SALES AND PROPERTY TAXES.

Lessee shall pay any leasehold tax, sales tax, personal property tax, transaction privilege tax, license or permit fee, or any other tax assessed as the result of its occupancy of Premises or conduct of any activity at the Airport under authority of this Lease, including any such tax assessable on Lessor as a result thereof. In the event that laws or judicial decisions result in the imposition of a real property tax or any other form of tax or imposition on the interest of Lessor, such tax shall also be paid by Lessee for the period this Lease is in effect, to the extent such taxes are reasonably attributable to the Premises or a portion thereof or the operation of Lessee's business.

23. APPROVALS, CONSENTS AND NOTICES.

All approvals, consents and notices called for in this Lease shall be in writing, signed by the appropriate Party, and may not be established solely by oral testimony.

24. LIENS AND MORTGAGES.

24.1 General Provisions.

24.1.1 Except as provided in this Section 24, Lessee shall not engage in any financing or other transaction creating any mortgage or deed of trust upon the Premises, place or suffer to be placed upon the Premises any lien or other encumbrance, or suffer any levy or attachment to be made on Lessee's interest in the Premises. Any such mortgage or deed of trust, encumbrance or lien shall be deemed a violation of this Section, constituting a failure by Lessee to comply with the terms of the Lease, on the date of its execution or filing of record regardless of whether or when it is foreclosed or otherwise enforced.

24.1.2 Notwithstanding anything to the contrary in this Lease to the contrary, Lessee shall, during the Term, be permitted to pledge Lessee's ownership interests and/or mortgage, collaterally assign, or otherwise encumber its leasehold interest (including any interest in the improvements) under this Lease pursuant to one or more Mortgages, as defined below, to secure indebtedness, including, without limitation, one or more loans to finance construction of improvements and other development on the Premises, and

including refinancings thereof, subject to the restrictions of Section 24.1.4.

24.1.3 Any such encumbrance, including leasehold deed of trust, is referred to as a "Mortgage" and the holder thereof a "Mortgagee." The Mortgagee, upon taking possession or upon foreclosure or taking an assignment in lieu thereof, shall be liable for all future rents and obligations hereunder and shall attorn to Lessor. In no event shall any Mortgagee be responsible or liable for any claims against Lessee or any of Lessee's agents, employees, invitees, contractors or representatives for any death, injury, illness, damage to or loss of property (except only to the extent provided hereinafter with respect to a default by Lessee under this Lease), or tort related claims. In no event shall any Mortgagee be liable for the actions or omissions of Lessee or Lessee's agents, representatives, employees, contractors, or invitees (except only to the extent provided hereinafter with respect to a default by Lessee under this Lease). The Mortgagee shall not be responsible or liable for any default by Lessee under this Lease, except, and only, to the extent that such default continues for a period of THIRTY (30) days (or such additional time as is reasonably necessary for Mortgagee to cure such default, so long as Mortgagee is diligently pursuing action to cure the default) after (i) Mortgagee shall have obtained possession through a court-appointed receiver or ownership of the Premises, (ii) the Mortgagee shall have received written notice of such default at the same time that Lessor notifies Lessee of such default, (iii) any notice or cure period related to such default as provided in this Lease and in Section 24.2 and Section 24.3 below shall have elapsed without such default having been cured, and (iv) such default is reasonably capable of being cured by the Mortgagee. No Mortgage shall encumber Lessor's interest in the Premises or Lessor's interest in the improvements thereon. Further and promptly after Lessee assigns or encumbers any portion of the Premises or the improvements thereon, Lessee shall furnish Lessor with a written notice setting forth the name and address of such Mortgagee or trustee.

24.1.4 No Mortgage or deed of trust shall extend to or affect the fee, the reversionary fee interest or the estate of Lessor in the Premises. No Mortgage or deed of trust shall be binding upon Lessor in the enforcement of its rights and remedies under this Lease and by law provided, unless and until a copy thereof shall have been delivered to Lessor and such Mortgage or deed of trust is authorized in accordance with provisions of this Section 24.

24.1.5 Notwithstanding anything to the contrary in this Section 24, Lessor shall have all rights and remedies under Section 11 with respect to any Event of Default that continues after expiration of all applicable notice and cure periods set forth in Section 11.1 and this Section 24.

24.2 Lessor Agreement. With respect to Mortgagees of the Premises, Lessor agrees that:

24.2.1 If requested by a Mortgagee which shall have duly registered in writing with Lessor its name and address, and if Lessor shall give any notice, demand, election or other communication required hereunder (hereafter, collectively, "Notices") to Lessee, Lessor shall concurrently give a copy of each such Notice to the Mortgagee at the address designated by it. Notices shall be sent by registered or certified mail, return receipt requested, and shall be deemed given seventy-two (72) hours after the time they are deposited in a United States Post Office with postage charges prepaid, addressed to the Mortgagee. No Notice given by Lessor to Lessee shall be binding upon or affect Lessee or the Mortgagee unless a copy of the Notice shall be given to the Mortgagee pursuant to this Section 24.2.1.

24.2.2 Such Mortgagee entitled to such Notices, as specified above, shall have any and all rights of Lessee with respect to the curing of any default hereunder by Lessee.

24.2.3 If Lessor shall elect to terminate this Lease by reason of any default by Lessee with respect to the Premises, the Mortgagee that shall have become entitled to Notice as provided in this Section 24.2 shall have any and all rights of Lessee with respect to curing of any default with respect to the Premises.

24.2.4 Nothing herein contained shall be deemed to impose any obligation on the part of

Lessor to deliver physical possession of the Premises to such holder of a Mortgage. To the extent the physical possession of the Premises by a secured creditor is not inconsistent with the terms of this Lease, or is incompatible with the Lessor's selection of available remedies in the Event of Default, Lessor shall not prevent such physical possession. If more than one Mortgagee shall seek to exercise any of the rights provided for in this Section 24, the holder of the Mortgage having priority of lien over the other Mortgagees shall be entitled, as against the others, to exercise such rights. Should a dispute arise among Mortgagees regarding the priority of lien, the Mortgagees shall prove to the satisfaction of Lessor that they have settled that dispute.

24.3 Protection of Mortgagee(s). Until the time, if any, that an approved Mortgage shall be satisfied and released of record:

24.3.1 A Mortgagee shall have the right, for a period equal to the period afforded Lessee under this Lease to perform any term, covenant, or condition and to remedy any default by Lessee hereunder, plus such additional time that is reasonably needed for Mortgagee to exercise Lessee's rights to cure any defaults subject to the following: (a) if the default cannot be cured by Mortgage, no additional time shall be allowed; (b) if the default can be cured by Mortgagee, such additional period of time shall not exceed SIX (6) months after Mortgagee's receipt of such Notice, unless a longer period of time is otherwise approved by Lessor in writing; (c) if curing the default requires that Mortgagee has possession through a court-appointed receiver or ownership of the Premises, Mortgagee shall be diligently pursuing action to take possession through a court-appointed receiver or ownership of the Premises; and (d) Mortgagee shall not be entitled to more than TEN (10) days of additional time to cure any defaults in the payment of Base Rent. Lessor shall accept such performance with the same force and effect as if furnished by Lessee, and the Mortgagee shall thereby and hereby be subrogated to the rights of Lessor. Such Mortgagee cure period shall begin on the later of: (i) the date Mortgagee receives notice pursuant to Section 24.2, or (ii) the date that Lessee's cure period expires under this Lease. During such Mortgagee cure period, Lessor will not terminate this Lease or disturb possession, interest or quiet enjoyment by the Lessee or Mortgagee in the Premises or improvements for any reason, subject to the terms of this Lease, until such Mortgagee cure period has expired. The Mortgagees and their respective designees shall have the right to enter upon the Premises to give such performance.

24.3.2 In case of an Event of Default by Lessee in the performance or observance of any non-monetary term, covenant or condition to be performed by it hereunder, if such Event of Default cannot practicably be cured by the Mortgagee without taking possession or ownership of the Premises, in such Mortgagee's reasonable opinion, or if such Event of Default is not susceptible of being cured by the Mortgagee, then:

(a) The Mortgagee shall proceed diligently to obtain possession through a court-appointed receiver or ownership of the Premises, and, upon obtaining such possession, shall proceed diligently to cure such defaults as are reasonably susceptible of cure (subject to any order by a court of competent jurisdiction staying or otherwise precluding such Mortgagee from obtaining such possession); or

(b) The Mortgagee shall institute foreclosure proceedings and diligently prosecute the same to completion (unless in the meantime it shall acquire Lessee's estate hereunder, either in its own name or through a nominee, by assignment in lieu of foreclosure), subject to any order by a court of competent jurisdiction staying or otherwise precluding such Mortgagee from obtaining such possession.

(c) The Mortgagee shall not be required to obtain possession or to continue in possession of the Premises pursuant to Section 24.3.2(a), or to continue to prosecute foreclosure proceedings pursuant to Section 24.3.2(b), if and when such Event of Default shall be cured.

(d) If any Mortgagee is prohibited from commencing or prosecuting foreclosure or other appropriate proceedings in the nature thereof by any process or injunction issued by any court, or by reason of any action by any court having jurisdiction of any bankruptcy or insolvency proceeding involving

Lessee, the times for commencing or prosecuting foreclosure or other proceedings, including proceedings to obtain possession, shall be extended for the period of the prohibition.

24.4 New Lease

24.4.1 Lessor agrees that, in the event of early termination of this Lease for any reason (including but not limited to any default by Lessee), Lessor, if requested by any Mortgagee, will enter into a new lease of the Premises with the most senior Mortgagee requesting a new lease, which new lease shall commence as of the date of termination of this Lease and shall run for the remainder of the original Term of this Lease (plus any applicable Renewal Term if exercised), at the rent and upon the terms, covenants and conditions herein contained, provided that:

(a) Such Mortgagee shall make written request upon Lessor for the new lease within SIXTY (60) calendar days after the date such Mortgagee receives written notice from Lessor that this Lease has been terminated;

(b) Such Mortgagee shall pay to Lessor, at the time of the execution and delivery of the new lease, any and all Base Rent payments, finance charges and late fees which would, at that time, be due and unpaid pursuant to this Lease but for its termination, and in addition thereto all reasonable expenses, including reasonable attorneys' fees, which Lessor shall have incurred by reason of the preparation of such new lease;

(c) Such Mortgagee shall perform and observe all covenants in this Lease to be performed and observed by the lessee under such new lease from and after full execution and delivery of such new lease, and shall within a reasonable period of time (not to exceed the time frames set forth in Section 24.3.1 above) after full execution and delivery of such new lease remedy any other conditions which Lessee under the terminated Lease was obligated to perform under its terms and did not perform, to the extent the same are reasonably susceptible of being cured by the Mortgagee; and

(d) The lessee under the new lease shall have the same rights, including the right of occupancy to the buildings and improvements on the Premises and elsewhere on the Airport as Lessee had under this Lease immediately prior to its termination.

Notwithstanding anything to the contrary expressed or implied in this Lease, any new lease made pursuant to this Section 24 shall have the same priority as this Lease with respect to any mortgage, deed of trust, or other lien, charge, or encumbrance on the fee of the Premises, and any sublease under this Lease shall be a sublease under the new Lease and shall not be deemed to have been terminated by the termination of this Lease.

24.4.2 Nothing herein contained shall require any Mortgagee to enter into a new lease pursuant to this Section 24.4, or to cure any default of Lessee referred to above.

24.4.3 If any Mortgagee shall request a new lease as provided in this Section 24.4, Lessor agrees, at the request of, on behalf of and at the expense of the Mortgagee, to institute and pursue diligently to conclusion the appropriate legal remedy or remedies to oust or remove the original Lessee from the Premises, but not any authorized subtenants actually occupying the Premises or any part thereof.

24.4.4 Unless and until Lessor has received notice from each Mortgagee that the Mortgagee elects not to demand a new lease as provided herein, or until the period therefor has expired, Lessor shall not cancel or agree to the termination or surrender of any existing subleases nor enter into any new leases or subleases with respect to the Premises without the prior written consent of each Mortgagee.

24.5 Effect of Transfer. Neither the foreclosure of any Mortgage (whether by judicial proceedings or by virtue of any power of sale contained in the Mortgage), nor any conveyance of the leasehold estate created by this Lease by Lessee to any Mortgagee or its designee by an assignment or deed in lieu of foreclosure or other similar instrument, shall require the consent of Lessor or constitute a default or Event of Default under this Lease, and upon such foreclosure, sale or conveyance, Lessor shall recognize the purchaser or other transferee in connection therewith as the Lessee under this Lease, subject only to an assumption in writing by such purchaser or transferee of all obligations of Lessee under this Lease from and after the date of such assumption.

25. GOVERNING LAW; ATTORNEY'S FEES.

The laws of the State of Arizona shall govern the matters set forth in this Lease. Venue of any action brought under this Lease shall, at the option of Lessor, lie in Maricopa County, Arizona.

26. RULES AND REGULATIONS.

Lessee shall at all times comply with all Federal, state and local laws, ordinances, rules, and regulations which are applicable to its activities on the Airport, the Premises itself (including but not limited to the *Americans with Disabilities Act*), or the operation, management, maintenance, or administration of the Airport, including all laws, ordinances, rules and regulations adopted after the Effective Date. Lessee shall at all times comply with the *Airport Minimum Standards* and *Airport Rules and Regulations*, as the same may be amended from time to time. Copies of the current *Airport Minimum Standards* and *Airport Rules and Regulations* are attached hereto as **Exhibit D**. Lessee acknowledges and agrees that Lessor may amend the *Airport Minimum Standards* and *Airport Rules and Regulations* at any time in Lessor's commercially reasonable discretion. Lessee shall, within a reasonable period of time, reasonably display to Lessor any permits or licenses required by law or other evidence of compliance with laws upon written request.

Lessor shall use commercially reasonable efforts to timely notify Lessee of any updates in the *Airport Rules and Regulations*, the *Airport Minimum Standards*, the *Aviation Fuel Storage, Dispensing and Handling Guidelines*, and the Airport *Fly Friendly Procedures*.

27. CORPORATE AUTHORIZATION.

In executing this Agreement, each of Lessor and Lessee represents and warrants to the other that if such Party is a corporation, or other legal entity, each Party has obtained and been granted the full right, power and authority to enter into this Lease.

28. UTILITY LINES AND SERVICE CHARGES.

28.1 Lessee shall, at no cost or expense to Lessor, provide or arrange for any public utility, water and sewage lines, connections and services that are needed in connection with any building(s), structure(s) or other improvement(s) placed on the Premises by Lessee, or required for Lessee's activities thereon, and shall be responsible for the maintenance of such lines and connections from where they enter the Premises. If requested to do so by Lessee from time to time during the Term, Lessor will grant reasonable easements and rights-of-way on or across the Airport for the development and use of the Premises (in accordance with this Lease), including, without limitation, to suppliers of public or private utility services for the purpose of supplying Lessee with such services, but Lessor reserves the right to reasonably designate the lands along which such easements and rights-of-way shall be granted so as to minimize the disruption of the operation of the Airport and other Airport tenants.

28.2 Lessee shall pay for all utilities, including trash collection, used in its operations at the Premises. The charges and method of payment for each utility or service shall be determined by the appropriate supplier

of the utility or service in accordance with applicable laws and regulations, on such basis as the appropriate supplier of the utility or service may establish.

28.3 Notwithstanding the execution of this Lease, Lessor retains the right to the continued use of such utility lines and services as are presently on the Premises (so long as Lessor's use does not interfere with or disrupt Lessee's use, occupancy, development and subleasing activities), and the right to repair the same when necessary in Lessor's reasonable discretion, including but not limited to, any utility easements on the Premises. Lessor agrees to coordinate any entries onto the Premises with Lessee. Lessor shall conduct such use and repairs in such a manner and at such times as to not interfere with Lessee's activities thereon.

29. RESERVATIONS TO LESSOR.

Subject to Lessor's representations, warranties and obligations, the Premises are accepted "as is, where is" by Lessee, subject to any and all existing easements or other encumbrances. In advance consultation with Lessee, Lessor reserves the right to grant reasonable easements, rights-of-way, and permits, over, on, or across any portions of the Premises for commercially reasonable purposes; provided, that Lessor and the grantee, as applicable, shall not exercise such rights so as to interfere with or disrupt Lessee's activities on the Premises, including the development of the Premises, to be determined in the reasonable judgment of Lessor and Lessee, and all such interference shall be minimized. Lessor shall provide Lessee reasonable notice of any plan to undertake the activities contemplated under this Section and shall coordinate with Lessee regarding the execution of such plans to minimize any interference with Lessee's or any subtenant's activities on the Premises, that all work shall be in compliance with all applicable laws, including Environmental Law, and that the surface of the Premises shall be restored to its original condition, including any necessary remediation in accordance with Environmental Law of any contamination associated with any Hazardous Material disturbed during any construction, at no cost to Lessee, upon the completion of any construction. Lessor agrees that any rights granted to any parties by reason of this clause shall contain provisions obligating such parties to at a minimum the same conditions applicable to Lessor under this Section 29, including but not limited to that the surface of the Premises and any Improvements shall be promptly restored to their original condition, at no cost to Lessee, promptly upon the completion of any construction.

In addition to the foregoing, Lessee acknowledges that use and development of the Premises and the property immediately adjacent to the north of the Premises (identified as Lot 116B) will likely result in the need for one (1) or more reciprocal or other cross-access, ingress and egress easement(s) for the benefit of one or both of such parcels and to facilitate access to and from the parcels and such adjacent public and private streets, as applicable. At such time as either Party determines the need for such easement or easements, Lessee will cooperate with Lessor in accordance with this Section 29 and will grant and be a party to all such easement(s) (whether they benefit or burden the Premises), so long as such easement(s) do not materially impact or impair Lessee's use of the Premises in accordance with the terms of this Lease and its right of access to and from the Premises pursuant to Section 1.3 herein.

30. FEDERAL AVIATION ADMINISTRATION (FAA) PROVISIONS.

30.1 Lessee agrees that in the event improvements are constructed, maintained, or otherwise operated on the Premises for a purpose for which a Department of Transportation (DOT) program or activity is intended, or for another purpose involving the providing of similar services or benefits, Lessee shall maintain and operate such facilities and services in compliance with all other requirements imposed pursuant to 49 CFR Part 21, *Nondiscrimination in Federally Assisted Programs of the Department of Transportation,* as it may be amended.

30.2 Lessee agrees that: (i) no person shall be excluded from participation in, denied the benefits of, or be otherwise subjected to discrimination on the grounds of race, color, creed, disability, age, sex or national

origin in the use of the Premises; (ii) that in the construction of any improvements on, over, or under the Premises and the furnishing of services thereon, no person shall be excluded from participation in, denied the benefits of, or otherwise be subjected to discrimination on the grounds of race, color, or national origin; and (iii) that Lessee shall use the Premises in compliance with all other requirements imposed by or pursuant to 49 CFR Part 21, as it may be amended.

30.3 Lessee assures Lessor that it will comply with pertinent statutes, Executive Orders, and rules promulgated to assure that no person shall, on the grounds of race, creed, color, national origin, or sex, age or handicap, be excluded from participating in any activity.

30.4 Lessor reserves the right to further develop or improve the landing area of the Airport as it sees fit, regardless of the desires or view of Lessee, and without interference or hindrance therefrom.

30.5 Lessor reserves the right, but shall not be obligated to Lessee, to maintain and keep in repair the landing area of the Airport and all publicly owned facilities of the Airport, together with the right to direct and control all activities of Lessee in this regard. Lessor and Lessee agree that Lessee has no responsibility whatsoever with respect to maintenance and repair of the landing area of the Airport, or any publicly owned facilities of the Airport.

30.6 This Lease shall be subordinate to the provisions and requirements of any existing or future agreement between Lessor and the United States relative to the development, operation or maintenance of the Airport. Lessor agrees to reasonably consult with Lessee prior to executing or entering into any agreement that could reasonably be expected to have a material effect on the Premises, or on Lessee or its subtenants, or on any Permitted Uses, with the stated purpose of attempting in good faith to avoid any interference with, disruption of, or restriction or limitation on Lessee's intended use and development of the Premises in accordance with this Lease.

30.7 There is reserved unto Lessor, for the use and benefit of the public, a right of flight for the passage of aircraft in the airspace above the surface of the Premises, which shall include the right to cause in the airspace any noise inherent in the operation of aircraft, now known or hereafter used for navigation of or flight in or through the airspace, and for the use of such airspace for landing on, taking off from, or operation on the Airport.

30.8 Lessee agrees to comply with the notification and review requirements covered in 14 CFR Part 77 in the event future construction of a building is planned for the Premises or in the event of any planned modification or alteration of any present or future building or structure situated on the Premises.

30.9 Lessee shall not erect or permit the erection of any structure or building, nor permit the growth of any tree on the Premises, or any other obstruction that exceeds height requirements contained in 14 CFR Part 77 or amendments thereto, or interferes with the runway and/or taxiway "line of sight" of the control tower. In the event these covenants are breached, Lessor reserves the right to enter upon the Premises and to remove the offending structure or object at the expense of Lessee.

30.10 Lessee shall not make use of the Premises in any manner that might interfere with the landing and taking off of aircraft from the Airport or otherwise constitute a hazard. In the event this covenant is breached, Lessor reserves the right to enter upon the Premises and cause the abatement of such interference at the expense of Lessee.

30.11 Nothing contained in this Lease shall be construed to grant or authorize the granting of an exclusive right within the meaning 49 U.S.C. §40103(e) and 47107 (a)(4).

30.12 This Lease and all of the provisions hereof shall be subject to whatever right the United States

government now has, or in the future may have or acquire, affecting the control, operation, regulation and taking over of the Airport, or the exclusive or non-exclusive use of the Airport by the United States during the time of war or national emergency.

30.13 To the extent that Lessee conducts or engages in any aeronautical activity for furnishing services to the public at the Airport, Lessee shall furnish its services on a reasonable and not unjustly discriminatory basis to all users and charge reasonable and not unjustly discriminatory prices for each unit or service; except, however, that Lessee may be allowed to make reasonable and nondiscriminatory discounts, rebates, or other similar type of price reductions to volume purchasers.

30.14 Lessee shall conform to Lessor and FAA safety and security rules and regulations regarding use of the Airport air operations area including runways, taxiways, taxilanes and aircraft aprons by vehicles, employees, customers, visitors, etc., in order to prevent security breaches and avoid aircraft incursions and vehicle/pedestrian deviations; complete and pass an airfield safe driving instruction program when offered or required by Lessor; and be subject to penalties as prescribed by Lessor for violations of Airport safety and security requirements.

31. TITLE VI OF THE CIVIL RIGHTS ACT OF 1964.

31.1 Lessee agrees to comply with pertinent statues, Executive Orders and such rules as are promulgated to ensure that no person shall, on the grounds of race, creed, color or national origin, sex, age or disability be excluded from participating in any activity conducted with or benefiting from Federal assistance. Lessee understands and acknowledges that the FAA requires inclusion of and adherence to the terms and conditions of Title VI of the Civil Rights Act of 1964 (78 Stat. 252, 42 U.S.C. §§2000d to 2000d-4) ("**Title VI**") in all airport/aviation lease agreements where Lessor receives federal funding, including the Lease in this instance.

31.2 During the Term, Lessee, for itself, its assignees, and successors in interest agrees as follows:

31.2.1 Compliance with Regulations: Lessee will comply with the Title VI List of Pertinent Non-Discrimination Acts and Authorities, as they may be amended from time to time, which are herein incorporated by reference and made a part of this Lease.

31.2.2 Non-discrimination: Lessee, with regard to the work performed by it during Lease, will not discriminate on the grounds of race, color, or national origin in the selection and retention of subcontractors, including procurements of materials and leases of equipment. Lessee will not participate directly or indirectly in the discrimination prohibited by the Nondiscrimination Acts and Authorities, including employment practices when the contract covers any activity, project, or program set forth in Appendix B of 49 CFR Part 21.

31.2.3 Solicitations for Subcontracts, Including Procurements of Materials and Equipment: In all solicitations, either by competitive bidding, or negotiation made by Lessee for work to be performed under a subcontract, including procurements of materials, or leases of equipment, each potential subcontractor or supplier will be notified by Lessee of Lessee's obligations under this Lease and the Non-discrimination Acts And Authorities on the grounds of race, color, or national origin.

31.2.4 Information and Reports: Lessee will provide all information and reports required by the Acts, the Regulations and directives issued pursuant thereto and will permit access to its books, records, accounts, other sources of information, and its facilities as may be determined by the sponsor or the Federal Aviation Administration to be pertinent to ascertain compliance with such Nondiscrimination Acts and Authorities and instructions. Where any information required of Lessee is in the exclusive possession of another who fails or refuses to furnish the information, Lessee will so certify to the sponsor or the Federal Aviation

Administration as appropriate, and will set forth what efforts it has made to obtain the information.

31.2.5 Sanctions for Noncompliance: In the event of Lessee's noncompliance with the Nondiscrimination provisions of this Lease, Lessor will impose such default remedies as it or the Federal Aviation Administration may determine to be appropriate, including, but not limited to:

(a) withholding payments, if any, to Lessee under the Lease until Lessee complies; and/or

(b) cancelling, terminating, or suspending the Lease, in whole or in part.

31.2.6 Incorporation of Provisions: Lessee will include the provisions subsections 31.2.1 through 31.2.6 in every subcontract, including procurements of materials and leases of equipment, unless exempt by the Acts, the Regulations and directives issued pursuant thereto. Lessee will take action with respect to any subcontract or procurement as the sponsor or the Federal Aviation Administration may direct as a means of enforcing such provisions including sanctions for noncompliance. Provided, that if Lessee becomes involved in, or is threatened with litigation by a subcontractor, or supplier because of such direction, Lessee may request Lessor to enter into any litigation to protect the interests of Lessor. In addition, Lessee may request the United States to enter into the litigation to protect the interests of the United States.

31.3 The Lessee for itself, and its successors in interest and assigns, as a part of the consideration hereof, does hereby covenant and agree that (1) no person on the ground of race, color, or national origin, will be excluded from participation in, denied the benefits of, or be otherwise subjected to discrimination in the use of said facilities, (2) that in the construction of any improvements on, over, or under such land, and the furnishing of services thereon, no person on the ground of race, color, or national origin, will be excluded from participation in, denied the benefits of, or otherwise be subjected to discrimination, (3) that Lessee will use the Premises in compliance with all other requirements imposed by or pursuant to the List of Pertinent Non-Discrimination Acts and Authorities.

31.4 During the performance of this Lease, Lessee, for itself, its assignees, and successors in interest agrees to comply with the following non-discrimination statutes and authorities; including but not limited to the following (which Lessor is required to disclose and include in such Lease and other agreements, pursuant to FAA regulation):

- Title VI of the Civil Rights Act of 1964 (42 U.S.C. § 2000d *et seq*., 78 Stat. 252) (prohibits discrimination on the basis of race, color, national origin);
- 49 CFR Part 21 (Non-discrimination In Federally-Assisted Programs of The Department of Transportation—Effectuation of Title VI of The Civil Rights Act of 1964);
- The Uniform Relocation Assistance and Real Property Acquisition Policies Act of 1970 (42 U.S.C. § 4601) (prohibits unfair treatment of persons displaced or whose property has been acquired because of Federal or Federal-aid programs and projects);
- Section 504 of the Rehabilitation Act of 1973, (29 U.S.C. § 794 et seq.), as amended, (prohibits discrimination on the basis of disability); and 49 CFR part 27;
- The Age Discrimination Act of 1975, as amended, (42 U.S.C. § 6101 *et seq*.) (prohibits discrimination on the basis of age);
- Airport and Airway Improvement Act of 1982, (49 USC § 471, Section 47123), as

amended (prohibits discrimination based on race, creed, color, national origin, or sex);

- The Civil Rights Restoration Act of 1987 (PL 100-209) (broadened the scope, coverage and applicability of Title VI of the Civil Rights Act of 1964, The Age Discrimination Act of 1975 and Section 504 of the Rehabilitation Act of 1973, by expanding the definition of the terms "programs or activities" to include all of the programs or activities of the Federal-aid recipients, sub-recipients and contractors, whether such programs or activities are Federally funded or not);

- Titles II and III of the Americans with Disabilities Act of 1990, which prohibit discrimination on the basis of disability in the operation of public entities, public and private transportation systems, places of public accommodation, and certain testing entities (42 U.S.C. §§ 12131 – 12189) as implemented by Department of Transportation regulations at 49 CFR parts 37 and 38;

- The Federal Aviation Administration's Non-discrimination statute (49 U.S.C. § 47123) (prohibits discrimination on the basis of race, color, national origin, and sex);

- Executive Order 12898, Federal Actions to Address Environmental Justice in Minority Populations and Low-Income Populations, which ensures non-discrimination against minority populations by discouraging programs, policies, and activities with disproportionately high and adverse human health or environmental effects on minority and low-income populations;

- Executive Order 13166, Improving Access to Services for Persons with Limited English Proficiency, and resulting agency guidance, national origin discrimination includes discrimination because of limited English proficiency (LEP). To ensure compliance with Title VI, you must take reasonable steps to ensure that LEP persons have meaningful access to your programs (70 Fed. Reg. at 74087 to 74100);

- Title IX of the Education Amendments of 1972, as amended, which prohibits you from discriminating because of sex in education programs or activities (20 U.S.C. 1681 et *seq.*).

31.5 Lessee agrees that in the event improvements are constructed, maintained, or otherwise operated on the Premises for a purpose for which a Department of Transportation (DOT) program or activity is intended, or for another purpose involving the providing of similar services or benefits, Lessee shall maintain and operate such facilities and services in compliance with all other requirements imposed pursuant to 49 CFR Part 21, Nondiscrimination in Federally Assisted Programs of the Department of Transportation, as it may be amended.

32. FEDERAL FAIR LABOR STANDARDS ACT

This Lease incorporates by reference the provisions of 29 CFR Part 201, the Federal Fair Labor Standards Act (FLSA), with the same force and effect as if given in full text. Lessee has full responsibility to monitor compliance to the referenced statue or regulation. Lessee must address any claims or disputes that arise from this requirement directly with the U.S. Department of Labor – Wage and Hour Division.

33. OCCUPATIONAL SAFETY AND HEALTH ACT OF 1970

This Lease incorporates by reference the provisions of 29 CFR Part 1910 with the same force and effect as if given in full text. Lessee must provide a work environment that is free from recognized hazards that may cause death or serious physical harm to the employee. Lessee retains full responsibility to monitor its compliance and their subcontractor's compliance with the applicable requirements of the Occupational Safety

and Health Act of 1970 (20CFR Part 1910). Lessee must address any claims or disputes that pertain to a referenced requirement directly with the U.S. Department of Labor – Occupational Safety and Health Administration.

34. INCORPORATION OF QUITCLAIM DEED.

Lessor owns the Airport pursuant to a Quitclaim Deed from the United States Government ("**Deed**"), a copy of which is available to Lessee upon request and is hereby incorporated in its entirety. To the extent the Deed has terms, conditions, obligations, requirements or restrictions that apply to this Lease, Lessor, Lessee or any matter in connection herewith, Lessee agrees to be bound by all the terms, covenants and conditions of the Deed, including the following:

34.1 That this Lease is subject to all terms and conditions of the Deed; and

34.2 That in case of any conflict between the Deed and this Lease, the Deed shall control.

35. REQUIRED PROVISIONS OF QUITCLAIM DEED.

35.1 Section VI (A)(5)(c) of the Deed requires that the following provisions be included in this Lease:

35.1.1 In furnishing services to the public, Lessee shall not discriminate against any person or class of persons by reason of race, color, creed, or national origin, and Lessee shall otherwise provide such services on a fair, equal, and not unjustly discriminatory basis to all users thereof.

35.1.2 Lessee shall charge fair, reasonable, and not unjustly discriminatory prices for each unit for service; except, however, that the Lessee may be allowed to make reasonable and nondiscriminatory discounts, rebates, or other similar types of price reductions to volume purchasers.

35.2 If the Premises are within any of the archaeological sites identified in Section VIII.A of the Deed, then, the provisions of Section VIII of the Deed shall be deemed incorporated in this Lease by this express reference to Section VIII of the Deed.

35.3 To the extent the Deed requires that other specific provisions thereof be inserted in this Lease by express reference to the Deed, this sentence shall constitute an express reference to all such applicable provisions of the Deed.

36. AIRPORT SECURITY.

36.1 Airport Security Plan.

36.1.1 Lessor's Operations Department maintains an approved Airport Security Plan ("**Security Plan**") pursuant to 49 CFR Parts 1540 and 1542, and 14 CFR Part 139. Lessee shall at all times comply with Lessor's Operations Department security directives, security bulletins, or verbal notifications existing now or in the future.

36.1.2 Lessee is responsible for maintaining security practices, facilities, and perimeter boundaries on their leasehold that meet the security standards set forth by Lessor's Operations Department.

36.1.3 Lessee shall promptly upon written request from Lessor correct physical or procedural deficiencies caused by Lessee that are located on the Premises which are contrary to Lessor's Operations Department, security directives, security bulletins, or verbal notifications existing now or in the future. Within TWENTY-FOUR (24) hours of Lessor notifying Lessee of any deficiency, Lessor shall provide Lessee with a reasonably-detailed explanation of the deficiencies. Lessee shall be given a reasonable period of time (under the circumstances) to correct such deficiencies.

36.1.4 Lessee shall, to the fullest extent permitted by law, indemnify, defend and hold Lessor harmless for, from and against any security violation committed by any agents, employees, invitees, subcontractors, sub-lessees or independent contractors of Lessee.

36.1.5 Lessee shall conduct and document all self-audits and self-inspections as required by Transportation Security Administration ("**TSA**") or Lessor's Operations Department and make such audits available for inspection.

36.1.6 Lessee shall designate a primary security coordinator to receive security related briefings, bulletins and sensitive security information.

36.1.7 Lessor reserves the right to modify the Security Plan from time to time, as necessary or as directed by TSA. Lessor's Operations Department shall notify the Lessee security coordinator regarding modifications that effect Lessee.

36.2 Airport Security Badge.

36.2.1 Lessee's employees and contractors that require a badge shall be obligated to complete all training and comply with all security requirements and directives issued by Lessor's Operations Department, TSA or other entity having security jurisdiction at the Airport. Lessee, employees, and contractors will surrender security badges upon request by Lessor's Operations Department; physical security media (badges and keys) remain the property of Lessor. Within SEVENTY-TWO (72) hours of Lessor's confiscation of any security badges, Lessor shall provide Lessee with a reasonably-detailed explanation of the violations that caused Lessor to confiscate the security badges.

36.2.2 Lessee, employees and contractors shall comply with all security related audits, inspections, and screenings conducted by the Lessor's Operations Department.

36.2.3 Lessee will promptly return badges to the Lessor's badging office when badge holders employment is terminated, the badge is no longer needed or the employee/contractor is on extended leave.

36.2.4 Misuse of a badge or security procedures will bring about action, including, but not limited to, retraining, suspension or revocation of one or all misused badges.

37. DEFAULT BY LESSOR.

In the event of any alleged breach by Lessor of its covenants or duties contained in this Lease, Lessee shall have available all rights and remedies provided in contract, at law and/or in equity, provided, however, Lessee may not exercise any such right or remedy unless Lessee has notified Lessor by written notice of such alleged default, and Lessor has not cured such default within the THIRTY (30) calendar day period subsequent to receipt of such notice or, in the event such alleged default is of such a nature that it cannot reasonably be cured within such THIRTY (30) calendar day period, Lessor has failed to pursue a cure of such alleged default with all due diligence. Notwithstanding anything to the contrary contained in this Lease, in no event shall Lessee be entitled to terminate this Lease or abate or offset any installment of Base Rent, or any other payments to be made by Lessee hereunder except as expressly permitted in this Lease.

38. BROKERS.

Lessor and Lessee each represents and warrants to the other Party that it has not had any dealings with any real estate brokers, finders or agents in connection with this Lease. Lessor and Lessee each agrees to indemnify, defend (with counsel selected by the other) and hold the other Party and other Party's nominees, successors and assigns harmless from any and all claims, costs, commissions, fees or damages arising from a

breach of such Party's representation and warranty in this Section.

39. SALE BY LESSOR.

Lessee agrees to look solely to Lessor's interest in the Airport, including rents, issues, profits, proceeds, and awards for the recovery of any judgment against Lessor, it being agreed that the members, partners, officers, directors or shareholders of Lessor shall not be personally liable for any such judgment. In the event of any sale or other conveyance by Lessor of its interest in the Premises, Lessor shall be automatically freed and released from all personal liability accruing from and after the date of such sale or conveyance as respects the performance of any covenant or obligation on the part of Lessor contained in this Lease to be performed, it being intended hereby that the covenants and obligations contained in this Lease on the part of Lessor shall be binding on the Lessor and its successors and assigns only during and in respect to the respective successive periods of ownership of the Premises.

40. ESTOPPEL CERTIFICATE.

Each of Lessor and Lessee shall, without charge, at any time and from time to time hereafter, within TEN (10) business days after written request from the other Party to do so, certify, by written instrument duly executed and acknowledged by such Party and certified to the other Party and to any prospective lender or purchaser/assignee: (i) as to whether this Lease has been supplemented or amended, and if so, the substance and manner of such supplement or amendment; (ii) as to the existence of any default hereunder to the best of such Party's knowledge; (iii) as to the date on which Lessee was obligated to commence paying Base Rent and all other charges hereunder and the expiration date of the Term; (iv) as to whether this Lessee has assigned or transferred its interests or any portion thereof in this Lease; and (v) as to any other matters relating to this Lease and the Premises as may be reasonably requested. The requesting Party and any prospective purchaser or lender to whom the same was certified may rely upon any such certificate.

41. UNAVOIDABLE DELAY.

In the event either Party shall be delayed or hindered in or prevented from the performance of any covenant, agreement, work, service, or other act required under this Lease to be performed by such Party ("**Required Act**"), and such delay or hindrance is due to Unavoidable Delay (as defined below), then the performance of such Required Act shall be excused for the period of delay and the time period for performance of the Required Act shall be extended by the same number of days in the period of Unavoidable Delay. For purposes of this Lease, "Unavoidable Delay" shall mean, with respect to either Party, an unavoidable delay in the performance by such Party of any non-monetary conditions or obligations under this Lease due including but not limited to: (a) construction delay to the extent caused by the other Party, (b) legal proceeding brought by a non-Party with respect to the Improvements or any provision or requirement of this Lease which by its nature prohibits the Improvements from being commenced, continued and/or completed, (c) a Party not receiving a governmental permit, license, approval or inspection in time to meet a contractual time period imposed hereunder provided that Party, in good faith, was diligent in the application or request for and prosecution of the process to obtain that permit, license, approval or inspection, (d) flood, (e) epidemic, (f) quarantine restriction, (g) unusually severe weather not reasonably anticipated, (h) strike, (i) walkout, (j) lock-out, (k) war, (l) national emergency, (m) fire, (n) act of God, (o) act of terrorism, (p) natural disaster, (q) explosion, (r) default by the other Party hereunder in the performance of its obligations hereunder, (s) a delay caused by the discovery, presences or actions necessary to investigate or remediate Hazardous Material under Article 14 (but excluding Hazardous Material attributable to the Party claiming Unavoidable Delay), or (t) other causes beyond such Party's control; provided that no Unavoidable Delay shall exist unless the Party claiming such Unavoidable Delay shall give written notice to the other Party of the occurrence of the Unavoidable Delay not later than FORTY-FIVE (45) days after the commencement of such Unavoidable Delay.

42. MISCELLANEOUS.

42.1 Personal Liability. No member of or employee of either Party shall be charged personally or held contractually liable by or to the other Party under any term or provision of this Lease because of any breach thereof, or because of its execution or attempted execution.

42.2 No Waiver. No provision of this Lease may be waived or modified except by a writing signed by the Party against whom such waiver or modification is sought.

42.3 Non-Waiver of Rights. No waiver or default by Lessor or Lessee of any of the terms, conditions, covenants or agreements hereof to be performed, kept or observed by the other shall be construed or act as a waiver of any subsequent default of any of the terms, covenants, conditions or agreements herein contained to be performed, kept or observed by such other Party, and neither Party shall be restricted from later enforcing any of the terms and conditions of this Lease.

42.4 Amendment. This Lease contains all agreements of the Parties as of the date hereof with respect to any matter mentioned herein. No prior agreement, correspondence, or understanding pertaining to any such matter shall be effective to interpret or modify the terms hereof. Oral commitments or promises are not enforceable and shall not be binding or made part of this Lease. Any revisions or modifications to this Lease must be in writing and mutually accepted by persons with full and complete authority to bind the party.

42.5 Invalid Provisions. Should any provision of this Lease or any application thereof be held invalid by a court of competent jurisdiction, the remainder of this Lease shall not be affected thereby, unless one or both Parties would be substantially and materially prejudiced.

42.6 Litigation Expenses. In the event of litigation between Lessor and Lessee, the prevailing Party shall be entitled to recover its reasonable attorneys' fees and all costs and expenses of litigation, including witness fees, expert witness fees, and court costs.

42.7 Headings. The headings contained herein are for convenience in reference only and are not intended to define or limit the scope of this Lease or any term thereof.

42.8 Entire Agreement. This Lease, including exhibits attached hereto at the time of its execution, constitutes the entire agreement between the Parties hereto and supersedes all prior negotiations, understandings and agreements between the Parties concerning such matters.

42.9 Right of First Offer. Provided there is no existing Event of Default, Lessee shall have a right of first offer to lease the Premises and all Improvements thereon following the expiration of the Term (or Renewal Term, as applicable) in accordance with this Section. If Lessee is interested in leasing the Premises and all Vertical Improvements thereon at fair market rental rate following expiration of the Term (or Renewal Term, as applicable), Lessee shall provide written notice ("**Notice of Interest**") to Lessor of its interest not less than ONE (1) year prior the expiration of the Term (or Renewal Term, as applicable). Lessor shall advise Lessee within THIRTY (30) days after Lessor's receipt of the Notice of Interest if Lessor does not intend to lease (or market for lease) the Premises following expiration of the Term (or Renewal Term, as applicable). If Lessor intends to lease (or market for lease) the Premises, the Parties shall negotiate in good faith to agree on lease terms and conditions, including the fair market rental rate of the Premises and all Improvements thereon. If the Parties have not reached an agreement on the material terms of a lease (other than the fair market rental rate) within NINETY (90) days after Lessor's receipt of the Notice of Interest, neither party shall have any further right or obligation under this Section 42.9. If the Parties have reached an agreement on all material terms of a lease other than the fair market base rental rate within NINETY (90) days of Lessor's receipt of the Notice of Interest, then the Parties shall, within TEN (10) calendar days after the expiration of such NINETY (90)-day period, proceed to determine the fair market base rental rate with the appraisal process as set forth in Section 4.3.2. Upon determining the fair market base rental rate for the Premises, Lessor and Lessee shall promptly

enter into a lease.

42.10 Memorandum of Lease. As of the Effective Date, or thereafter upon request from Lessee to Lessor, Lessor and Lessee agree to execute, acknowledge and deliver to one another a short form memorandum of lease for recording purposes in form and substance attached hereto as **Exhibit F**. In the event that such a memorandum of lease has been recorded, upon termination or expiration of this Lease, Lessee shall promptly execute such documents as reasonably requested by Lessor in recordable form to confirm the termination of this Lease.

42.11 Non-Disturbance. In the event that Lessor encumbers or liens any portion of the Premises, now or in the future, Lessor agrees to promptly (and in any event prior to the Effective Date in the event the Airport is encumbered as of such date) obtain for the benefit of Lessee and its leasehold lenders a commercially reasonable non-disturbance agreement (in form reasonably acceptable to Lessor, Lessee and Lessor's lenders) (an "**NDA**") stating that, among other provisions to be included in the NDA, provided no Event of Default has occurred and is continuing under this Lease, then this Lease shall not be terminated and the right of possession of Lessee to the Premises shall not be affected or disturbed in the exercise of any of its rights or remedies under such encumbrance or lien.

43. INCORPORATION OF RECITALS.

The recitals set forth herein are acknowledged by the Parties to be true and correct and are incorporated herein by this reference.

44. DECLARATION.

44.1 Subordination. The Premises is subject to and subordinate to that certain Declaration of Covenants, Conditions and Restrictions for Skybridge Arizona, dated July 31, 2019, recorded in the Official Records of Maricopa County, Arizona, as Instrument No. 20190580736 ("**Declaration**"). Lessee hereby agrees to fulfill and comply with its duties and obligations as a "Lessee" as defined under the Declaration, as such duties and obligations relate to the Premises.

44.2 Assessments and other Obligations. Lessee shall pay its "Proportionate Share" of "Common Area Assessments" in accordance with the Declaration. Such payment obligation shall constitute "additional rent" under this Lease. Lessee shall fulfill any other obligations it may have as a "Lessee" in accordance with the Declaration, as such other obligations relate to the Premises.

IN WITNESS WHEREOF, the Parties have executed this Lease as of the Effective Date.

LESSOR:

PHOENIX-MESA GATEWAY AIRPORT AUTHORITY, an Arizona joint powers airport authority

By: _____
J. Brian O'Neill, A.A.E.
Executive Director/CEO

STATE OF ARIZONA)
) ss.
County of Maricopa)

ACKNOWLEDGED before me this____day of_____, 2021, by J. Brian O'Neill, in his capacity as the Executive Director/CEO of the Phoenix-Mesa Gateway Airport Authority.

_____
Notary Public

My Commission Expires:

_____

LESSEE:

SKYPLUS HOTELS, , CORP, an Arizona corporation

STATE OF _____

By: _____
Felipe Monroy Torres, CEO

County of _____
)
) ss.
)

ACKNOWLEDGED before me this day of_____, 2021, by Felipe Monroy Torres , in his capacity as CEO of SKYPLUS HOTELS , CORP, an Arizona corporation, for and on behalf of said corporation.

_____
Notary Public

My Commission Expires:

_____

EXHIBIT A

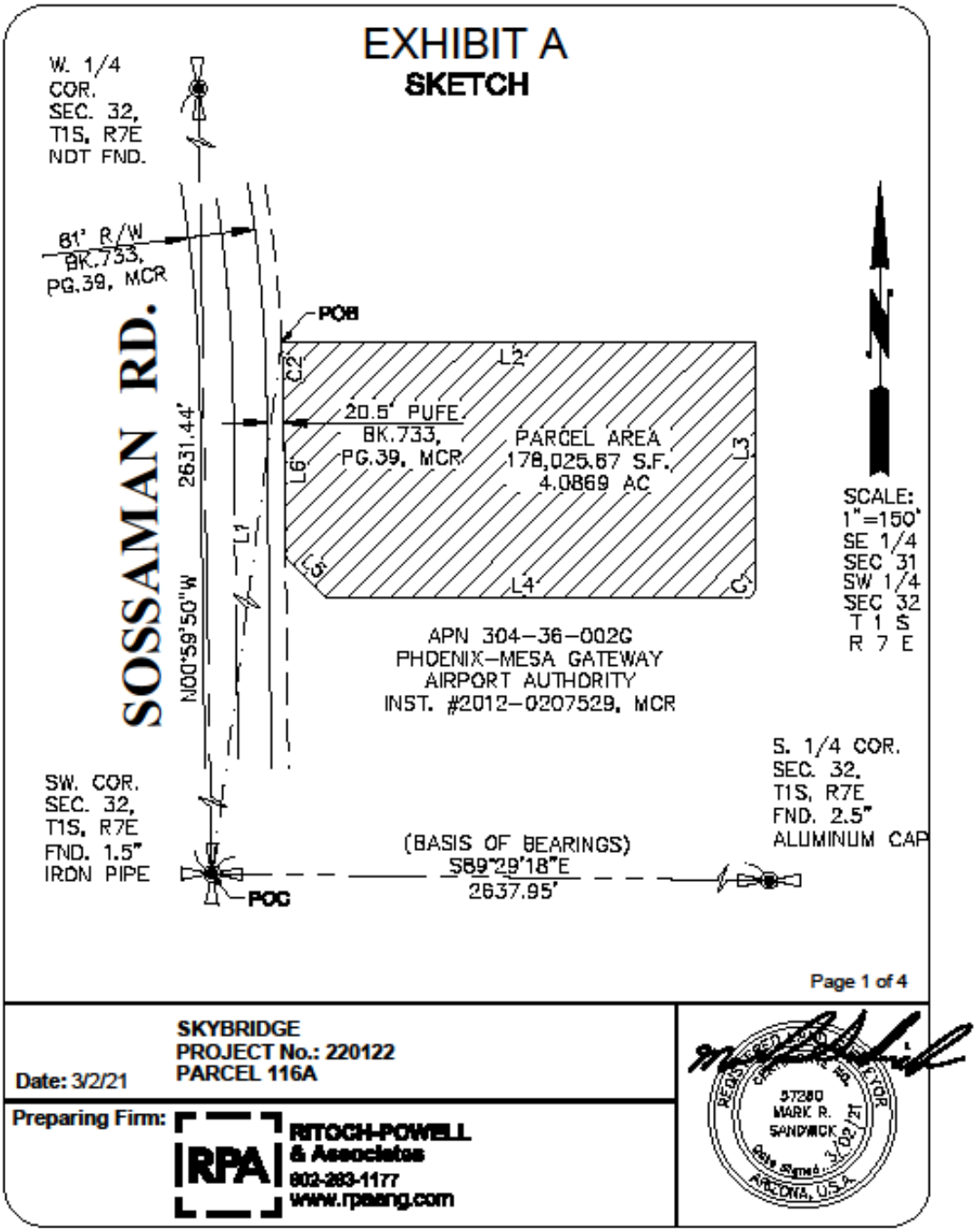
EXHIBIT A
SKETCH
W. 1/4
COR.
SEC. 32,
T1S, R7E
NDT FND.
81' R/W
BK.733,
PG.39, MCR
SOSSAMAN RD.
POB
L2
C2
20.5' PUFE
BK.733,
PG.39, MCR
PARCEL AREA
178,025.67 S.F.
4.0869 AC
L3
L6
L1
L5
L4
C1
2631.44'
N00°59'50"W
SCALE:
1"=150'
SE 1/4
SEC 31
SW 1/4
SEC 32
T 1 S
R 7 E
APN 304-36-002G
PHOENIX-MESA GATEWAY
AIRPORT AUTHORITY
INST. #2012-0207529, MCR
S. 1/4 COR.
SEC. 32,
T1S, R7E
FND. 2.5"
ALUMINUM CAP
SW. COR.
SEC. 32,
T1S, R7E
FND. 1.5"
IRON PIPE
(BASIS OF BEARINGS)
S89°29'18"E
2637.95'
POC
Page 1 of 4
SKYBRIDGE
PROJECT No.: 220122
PARCEL 116A
Date: 3/2/21
Preparing Firm:
RPA
RITOCH-POWELL
& Associates
602-283-1177
www.rpaeng.com
57280
MARK R.
SANDWICK
3/02/21
ARIZONA, U.S.A.

EXHIBIT A
TABLES

CURVE TABLE					
CURVE	DELTA	RADIUS	LENGTH	CHORD	CHORD BRG
C1	90°00'00"	15.00'	23.56'	21.21'	S45°00'00"W
C2	02°05'35"	1811.00'	66.16'	66.15'	N01°47'58"W

LINE TABLE		
LINE	BEARING	DISTANCE
L1	N04°09'50"E	1067.41'
L2	N90°00'00"E	575.14'
L3	S00°00'00"E	298.56'
L4	N90°00'00"W	504.79'
L5	N45°00'00"W	71.66'
L6	N00°45'31"W	196.79'

Page 2 of 4

SKYBRIDGE
PROJECT No.: 220122
PARCEL 116A

Date: 3/2/21

Preparing Firm: RITOCH-POWELL & Associates
602-263-1177
www.rpaeng.com

EXHIBIT A
LEGAL DESCRIPTION

A PARCEL OF LAND BEING A PORTION OF THAT TRACT AS CONVEYED TO PHOENIX-MESA GATEWAY AIRPORT AUTHORITY BY DEED OF RECORD IN INSTRUMENT NUMBER 2012-0207529, MARICOPA COUNTY RECORDS (MCR) AND AS SHOWN ON THAT ALTA/NSPS LAND TITLE SURVEY BY HUNTER ENGINEERING STAMPED AND SIGNED BY JERRY D. HEATH JR. ON 4/30/2018 LOCATED WITHIN A PORTION OF THE SOUTHWEST QUARTER OF SECTION 32, TOWNSHIP 1 SOUTH, RANGE 7 EAST OF THE GILA & SALT RIVER MERIDIAN, CITY OF MESA, MARICOPA COUNTY, ARIZONA, MORE PARTICULARLY DESCRIBED AS FOLLOWS:

COMMENCING AT THE SOUTHWEST CORNER OF SAID SECTION 32 (FND 1.5" IRON PIPE) FROM WHICH POINT THE SOUTH QUARTER CORNER THEREOF (2.5" AL CAP) BEARS S 89°29'18" E A DISTANCE OF 2637.95 FEET;

THENCE N 4°09'50" E A DISTANCE OF 1067.41 FEET TO A POINT ON THE EAST LINE OF A PUBLIC UTILITY AND FACILITY EASEMENT (PUFE) AS SHOWN ON THE MAP OF DEDICATION FOR VELOCITY WAY, SOUTH TAXIWAY CIRCLE AND SOUTH CARGO WAY RECORDED IN BOOK 733, PAGE 39, MARICOPA COUNTY RECORDS BEING THE WEST BOUNDARY LINE OF SAID ALTA/NSPS LAND TITLE SURVEY THE POINT OF BEGINNING;

THENCE ACROSS SAID PHOENIX-MESA GATEWAY AIRPORT AUTHORITY TRACT THE REMAINING COURSES AND DISTANCES:

THENCE N 90°00'00" E A DISTANCE OF 575.15 FEET;

THENCE S 00°00'00" E A DISTANCE OF 298.56 FEET;

THENCE ALONG THE ARC OF A CURVE TO THE RIGHT HAVING A RADIUS OF 15.00 FEET, THROUGH A CENTRAL ANGLE OF 90°00'00" AND HAVING AN ARC LENGTH OF 23.56 FEET;

THENCE N 90°00'00" W A DISTANCE OF 504.79 FEET;

THENCE N 45°00'00" W A DISTANCE OF 71.67 FEET TO A POINT ON SAID EAST PUFE LINE;

SKYBRIDGE
PROJECT No.: 220122
PARCEL 116A

Date: 3/2/21

Preparing Firm: RPA RITOCH-POWELL & Associates 602-263-1177 www.rpaeng.com

REGISTERED PROFESSIONAL LAND SURVEYOR 57280 MARK R. SANDWICK Date Signed: 3/02/21 ARIZONA, U.S.A.

EXHIBIT A

LEGAL DESCRIPTION

THENCE N 00°45'32" W, ALONG SAID EAST PUFE LINE, A DISTANCE OF 196.92 FEET AND THE BEGINNING OF A NON-TANGENT CURVE TO THE LEFT FROM WHICH POINT THE RAIDIUS POINT BEARS S 89°14'28" W;

THENCE ALONG SAID NON-TANGENT CURVE TO THE LEFT AND ALONG SAID EAST PUFE LINE HAVING A RADIUS OF 1811.00 FEET, THROUGH A CENTRAL ANGLE OF 02°05'20" AND HAVING AN ARC LENGTH OF 66.02 FEET TO THE POINT OF BEGINNING.

THE ABOVE DESCRIBED PARCEL CONTAINS 178,027.66 SQUARE FEET OR 4.0869 ACRES OF LAND, MORE OR LESS, INCLUDING ANY EASEMENTS OF RECORD.

THE BASIS OF BEARING FOR THE ABOVE DESCRIPTIONS IS S 89°29'18" E FOR THE SOUTH LINE OF THE SOUTHWEST QUARTER OF SECTION 32, TOWNSHIP 1 SOUTH, RANGE 7 EAST OF THE GILA & SALT RIVER MERIDIAN, CITY OF MESA, MARICOPA COUNTY, ARIZONA, AS SHOWN ON THE PLSS SUBDIVISION RECORD OF SURVEY-MARICOPA COUNTY GEODETIC DENSIFICATION AND CADASTRAL SURVEY RECORDED IN BOOK 609, PAGE 29, MARICOPA COUNTY RECORDS.

Page 4 of 4

SKYBRIDGE
PROJECT No.: 220122
PARCEL 116A

Date: 3/2/21

Preparing Firm: RITOCH-POWELL & Associates
602-283-1177
www.rpaeng.com

REGISTERED CIVIL ENGINEER
57280
MARK R. SANDWICK
Date signed 3/02/21
ARIZONA, U.S.A.

EXHIBIT B

AIRPORT RATES & CHARGES SCHEDULE

https://www.gatewayairport.com/Documents/DocumentLibrary/ExecDirSect/Airport%20Fees,%20Services%20and%20Rental%20Rates2019.pdf?Uniqueifier=BN0bRb1WgM

AIRPORT FEES, SERVICES & RENTAL RATES

https://www.gatewayairport.com/Documents/DocumentLibrary/ExecDirSect/Airport%20Fees,%20Services%20and%20Rental%20Rates2019.pdf?Uniqueifier=krpqAZPV2H

EXHIBIT C

AIRCRAFT OPERATIONS GUIDELINES

C1. Use of Airport. Lessee, Lessee's assigns, sublessees, or transferees who operate aircraft at the Airport and who are engaged in a private, government, or commercial aeronautical business or service and desire to use the Airport landing facilities for certain types of operations including, but not limited to: 1) taxiing and maneuvering on Airport runways, taxiways, ramps and aprons; 2) landings and approaches ("touch and go", "stop and go"); and 3) low approaches shall be subject to the provisions of this **Exhibit C.**

C2. Fees. As appropriate, Lessee shall pay Lessor fees as outlined below:

C2.1 *Landing Fee*: Lessee shall pay a landing fee at a rate equal to the amount reflected on the most current *Airport Rates and Charges Schedule* at the time of the aircraft operation, for each flight subject to a landing fee operated by or in conjunction with Lessee. The weight of any particular aircraft shall be its maximum certificated gross landing weight ("**MGLW**"). The amount owed to Lessor for each chargeable aircraft landing for each preceding calendar month shall be due and payable no later than the TWENTIETH (20th) day of the month succeeding the calendar month in which said aircraft landings took place. Lessee's written listing of all aircraft landings subject to such fee shall accompany said payment. Each entry in such listing shall include the date of the landing, the aircraft registration number, the type and model aircraft, the aircraft MGLW and the amount of the fee due.

C2.2 *Aircraft Ramp Space*. Lessee shall pay Lessor monthly, an aircraft-parking fee in an amount equal to that specified in the most current Airport Rates and Charges Schedule at the time of use, for each overnight aircraft parking position used by Lessee that is situated on Airport ramp outside the Premises. Such fees, if any, shall be payable to Lessor no later than the TWENTIETH (20th) day of the month following that in which Lessee occupied or used such space, and such payment shall be accompanied by a written listing of the aircraft (including registration number, make and model), dates and times of usage.

C2.3 *Other Space*. When available and specifically assigned to Lessee, Lessee shall pay Lessor monthly, in advance, a fee established in the *Airport Rates and Charges Schedule* for Lessee's non-exclusive use of other space not situated on or part of the Premises.

C2.4 *Additional Space/Services*. In the event that Lessee requires space or special services such as, but not limited to, aircraft line services, out-of-station ARFF standby, operations safety officers, ground service equipment, or fuel spills response teams, Lessee shall pay Lessor's standard fees for such services at the time the service is rendered, unless a secured account or agreement is established prior to requesting additional services.

C3. Books and Records. Lessee shall maintain for not less than THIRTY-SIX (36) months books, records and ledgers accurately reflecting the total number of monthly Aircraft landings for each aircraft subject to a landing fee and any other aforementioned fee indicating the make, type (including model designation), registration, maximum certificated gross landing weight, and arrival and departure time of each aircraft involved. These records or copies thereof shall be made available to Lessor upon Lessor's written request. In addition to monthly payment as set forth in Section C2 herein and together therewith, Lessee shall provide Lessor with a written report, indicating all aircraft operations and related information for the preceding calendar month.

C4. Disabled or Abandoned Aircraft. Should any aircraft owned or operated by Lessee through accident or for any other reason, become disabled or be abandoned in any area which could interfere with the continuous, normal operations of any of the runways, taxiways and airfield facilities at the Airport, Lessee shall:

C4.1 Immediately remove said aircraft to such location as may be designated by Lessor, unless such aircraft is required to remain in place pending investigation by the appropriate regulatory agency or agencies of the federal government; and

C4.2 In the event of any accident where federal investigation in place is required, promptly upon receiving clearance to do so from the appropriate federal agency, remove said aircraft and any wreckage or debris resulting therefrom to the area(s) designated by said federal agency authorizing such removal; otherwise, such aircraft wreckage and debris shall be immediately removed from the Airport or stored at a location approved by Lessor.

C4.3 Should Lessee fail to proceed immediately to remove disabled aircraft, or should aircraft owned or operated by Lessee be abandoned on the Airport, Lessor shall have the right to remove such aircraft by any means Lessor deems necessary under the circumstances, and Lessee shall indemnify, defend, keep and hold Lessor, its members, board of directors, officers, agents, officials, servants, employees and contractors harmless from and against any and all claims, costs, loss, liability, actions, suits, proceedings, damage or expense (including costs of suit and attorneys' fees and expenses) incurred by Lessor by reason of removal of said aircraft, injury to persons or property or damages to such aircraft caused by such removal, as well as storage costs therefor. Lessee shall reimburse Lessor for any costs incurred by Lessor in removing and storing any aircraft, any property damage to the Airport caused by such aircraft or removal within TEN (10) business days of demand therefor.

C5. Aviation Fuel. Lessee, at Lessee's sole cost and expense, shall procure aviation fuel delivered to its aircraft on the Airport. If fueling or defueling aircraft owned or operated by Lessee, or under Lessee's direct control, Lessee shall comply fully with Lessor's *Aviation Fuel Storage, Dispensing and Handling Guidelines*.

C6. Fly Friendly Procedures. Lessee acknowledges receipt of Lessor's Fly Friendly noise abatement procedures, and shall provide such information to flight crews, post the information in the Lessee's flight planning area, and use the procedures to the extent possible, when consistent with safety and Air Traffic Control directives.

EXHIBIT D

AIRPORT MINIMUM STANDARDS
&
AIRPORT RULES AND REGULATIONS

(Links Provided Below)

Minimum Standards

https://www.gatewayairport.com/Documents/DocumentLibrary/Board%20Policies/Airport%20Minimum%20Standards.pdf?Uniqueifier=NMDDAKF1A5

Rules and Regulations

https://www.gatewayairport.com/Documents/DocumentLibrary/Board%20Policies/Rules%20and%20Regulations_19-20.pdf?Uniqueifier=NMDDAKF1A5

EXHIBIT E

PROHIBITED USES

1. Outdoor activities or entertainment accessory to a day care center or a wedding or reception center
2. Any residential development including but not limited to a dwelling unit in conjunction with a primary use intended for occupancy by the proprietor, caretaker or night-watchman of the primary use; a Multiple residence development including apartments, condominiums, and townhouses; and single-family residential development.
3. Crematories
4. Construction yards
5. Wedding and reception centers
6. Fraternal organizations, service and social clubs, lodges, fraternities and sororities.
7. Nursing and convalescent homes, philanthropic and charitable institutions, residential and out-patient care and rehabilitation centers, hospices
8. Hospitals
9. Mortuaries
10. Self Storage
11. Outdoor display areas for the sale and rental of items characteristically not enclosed in a building, limited to the following:
    a. Plant nurseries
    b. Building materials such as lumber and masonry supplies
12. Amusement enterprises, such as miniature golf courses, water slides, driving ranges. Batting cages, and similar outdoor uses, but indoor facilities for such uses shall be permitted
13. Commercial automobile, recreational vehicle, and similar vehicular parking and storage lots and garages, as a primary use
14. Plasma centers, charity dining services, homeless shelters, day labor hiring centers, substance abuse detoxification and treatment centers, rescue missions, and similar social service uses
15. Pawn shops and tattoo parlors
16. Assisted living facilities
17. Car washes
18. Automobile service stations with or without accessory auto repair facilities
19. Swap meets, farmer's markets, and similar outdoor sales operations
20. Auto towing and impound yards
21. Animal hospitals, clinics, and boarding kennels
22. Churches

EXHIBIT F

WHEN RECORDED,
RETURN TO:

Daniel J. Serber, Esq.
Serber & Associates,
P.A.
2875 NE 191 Street, Suite 801
Aventura, FL 33180

MEMORANDUM OF LEASE

This MEMORANDUM OF LEASE ("Memorandum"), is made and executed as of the 1st day of May, 2021 (the "Effective Date"), by and between **PHOENIX-MESA GATEWAY AIRPORT AUTHORITY**, a joint powers airport authority authorized and existing under the laws of the State of Arizona ("**Landlord**"), whose mailing address is Phoenix-Mesa Gateway Airport Authority, Attn: Business Development Department, 5835 South Sossaman Road, Mesa, Arizona 85212, and **SKYPLUS HOTELS, CORP**, an Arizona corporation ("**Tenant**"), whose mailing address is 2415 E. Camelback Road, Suite 700, Phoenix, AZ 85016 .

RECITALS:

A. Landlord and Tenant entered into that certain Development Lease dated May 1, 2021 (the "Lease"), covering that certain real property legally described on Exhibit A attached hereto and incorporated herein by this reference (the "Leased Premises").

B. Landlord and Tenant have agreed to enter into this Memorandum for the purposes of providing record notice of the Lease, and to protect the rights and interests of Landlord and Tenant as to third parties. All capitalized terms not specifically defined herein shall have the meaning ascribed to such terms in the Lease.

NOW, THEREFORE, for and in consideration of the premises and other good and valuable consideration, the receipt and sufficiency of which are hereby acknowledged, Landlord and Tenant hereby agree as follows:

1. Lease and Premises. Subject to the covenants and conditions contained in the Lease, Landlord has leased to Tenant, and Tenant has leased from Landlord, the Leased Premises. Notice to the world is hereby given of the Lease and of the terms of the Lease.

2. Term. The term of the Lease commenced on May 1, 2021 and expires on April 30, 2081, unless earlier terminated pursuant to the terms of the Lease.

3. Conflict. This Memorandum is prepared for the purpose of constructive notice and in no way modifies the provisions of the Lease. In the event of any conflict or any inconsistency between the terms and provisions of the Lease and the terms and provisions of this Memorandum, the terms and provisions of the Lease shall control.

4. Successors and Assigns. This Memorandum shall be binding upon and inure to the benefit of the parties and their permitted successors and assigns.

5. Counterparts. This Memorandum may be executed in one or more counterparts, each of which shall be deemed an original but all of which together shall constitute one and the same document, provided that all parties are furnished a copy thereof reflecting the signature of all parties.

(*Signatures appear on the following page*.)

IN WITNESS WHEREOF, the parties hereto have duly executed this Memorandum as of the Effective Date set forth above.

LANDLORD:

PHOENIX-MESA GATEWAY AIRPORT AUTHORITY, an Arizona joint powers airport authority

By: _____
J. Brian O'Neill, A.A.E.
Executive Director/CEO

STATE OF ARIZONA)
) ss.
County of Maricopa)

ACKNOWLEDGED before me this____day of_____, 2021, by J. Brian O'Neill, in his capacity as the Executive Director/CEO of the Phoenix-Mesa Gateway Airport Authority.

_____
Notary Public

My Commission Expires:

_____

TENANT:

SKYPLUS HOTELS, , CORP, an Arizona corporation

By: _____
Felipe Monroy Torres, CEO

STATE OF _____)

County of _____) ss.
)

ACKNOWLEDGED before me this_____day of_____, 2021, by Felipe Monroy Torres in his capacity as CEO of SKYPLUS HOTELS, , CORP, an Arizona corporation, for and on behalf of said
corporation.

_____
Notary Public

My Commission Expires:

_____

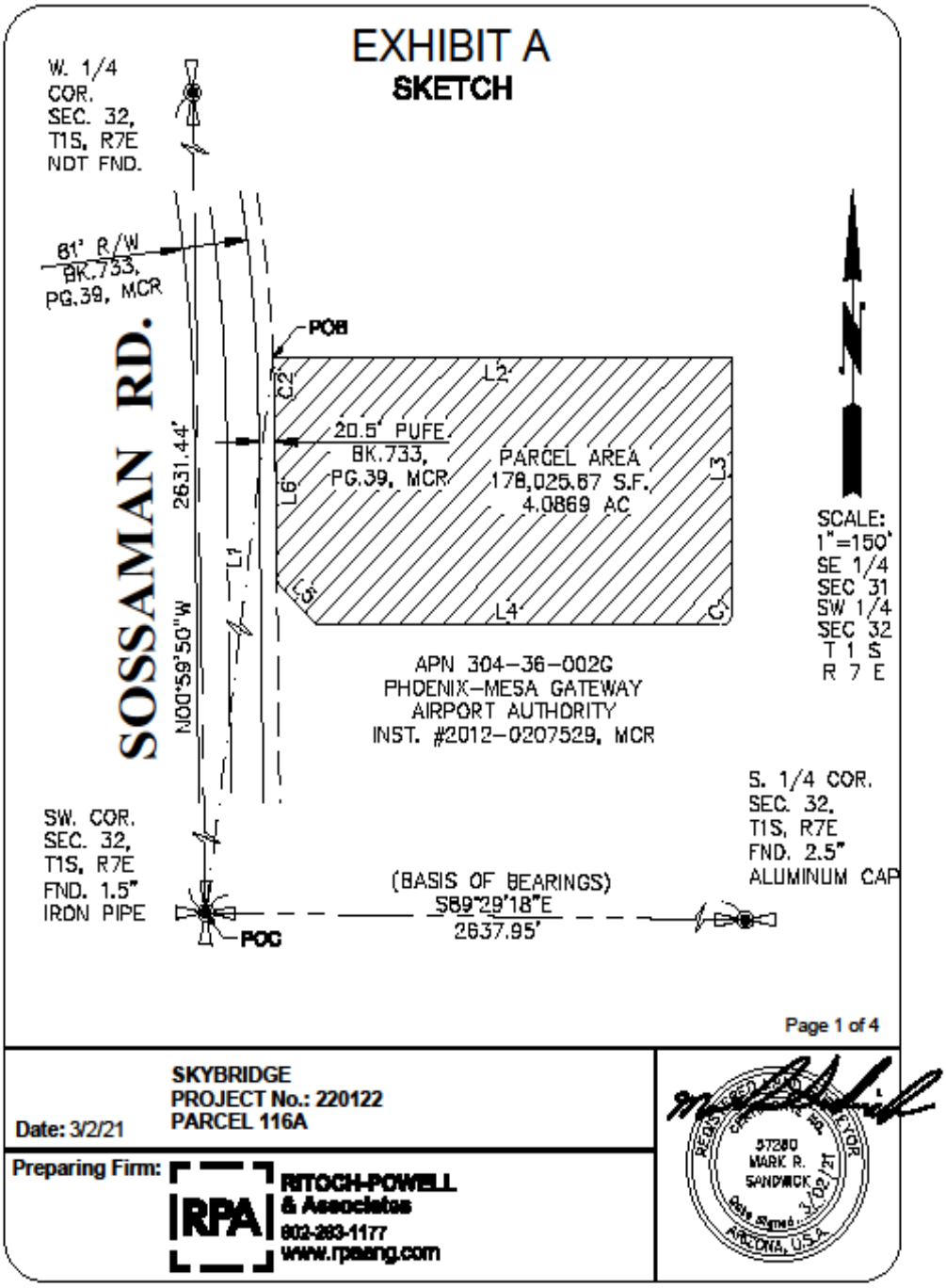

ADMIN 35908548v1

EXHIBIT A
TABLES

CURVE TABLE					
CURVE	DELTA	RADIUS	LENGTH	CHORD	CHORD BRG
C1	90°00'00"	15.00'	23.56'	21.21'	S45°00'00"W
C2	02°05'35"	1811.00'	66.16'	66.15'	N01°47'58"W

LINE TABLE		
LINE	BEARING	DISTANCE
L1	N04°09'50"E	1067.41'
L2	N90°00'00"E	575.14'
L3	S00°00'00"E	298.56'
L4	N90°00'00"W	504.79'
L5	N45°00'00"W	71.66'
L6	N00°45'31"W	196.79'

Page 2 of 4

SKYBRIDGE
PROJECT No.: 220122
PARCEL 116A

Date: 3/2/21

Preparing Firm: RITOCH-POWELL & Associates
602-263-1177
www.rpaeng.com

REGISTERED LAND SURVEYOR
CERTIFICATE No.
57280
MARK R. SANDWICK
Date Signed 3/02/21
ARIZONA, U.S.A.

EXHIBIT A
LEGAL DESCRIPTION

A PARCEL OF LAND BEING A PORTION OF THAT TRACT AS CONVEYED TO PHOENIX-MESA GATEWAY AIRPORT AUTHORITY BY DEED OF RECORD IN INSTRUMENT NUMBER 2012-0207529, MARICOPA COUNTY RECORDS (MCR) AND AS SHOWN ON THAT ALTA/NSPS LAND TITLE SURVEY BY HUNTER ENGINEERING STAMPED AND SIGNED BY JERRY D. HEATH JR. ON 4/30/2018 LOCATED WITHIN A PORTION OF THE SOUTHWEST QUARTER OF SECTION 32, TOWNSHIP 1 SOUTH, RANGE 7 EAST OF THE GILA & SALT RIVER MERIDIAN, CITY OF MESA, MARICOPA COUNTY, ARIZONA, MORE PARTICULARLY DESCRIBED AS FOLLOWS:

COMMENCING AT THE SOUTHWEST CORNER OF SAID SECTION 32 (FND 1.5" IRON PIPE) FROM WHICH POINT THE SOUTH QUARTER CORNER THEREOF (2.5" AL CAP) BEARS S 89°29'18" E A DISTANCE OF 2637.95 FEET;

THENCE N 4°09'50" E A DISTANCE OF 1067.41 FEET TO A POINT ON THE EAST LINE OF A PUBLIC UTILITY AND FACILITY EASEMENT (PUFE) AS SHOWN ON THE MAP OF DEDICATION FOR VELOCITY WAY, SOUTH TAXIWAY CIRCLE AND SOUTH CARGO WAY RECORDED IN BOOK 733, PAGE 39, MARICOPA COUNTY RECORDS BEING THE WEST BOUNDARY LINE OF SAID ALTA/NSPS LAND TITLE SURVEY THE POINT OF BEGINNING;

THENCE ACROSS SAID PHOENIX-MESA GATEWAY AIRPORT AUTHORITY TRACT THE REMAINING COURSES AND DISTANCES:

THENCE N 90°00'00" E A DISTANCE OF 575.15 FEET;

THENCE S 00°00'00" E A DISTANCE OF 298.56 FEET;

THENCE ALONG THE ARC OF A CURVE TO THE RIGHT HAVING A RADIUS OF 15.00 FEET, THROUGH A CENTRAL ANGLE OF 90°00'00" AND HAVING AN ARC LENGTH OF 23.56 FEET;

THENCE N 90°00'00" W A DISTANCE OF 504.79 FEET;

THENCE N 45°00'00" W A DISTANCE OF 71.67 FEET TO A POINT ON SAID EAST PUFE LINE;

Page 3 of 4

SKYBRIDGE
PROJECT No.: 220122
PARCEL 116A

Date: 3/2/21

Preparing Firm: RPA RITOCH-POWELL & Associates 602-283-1177 www.rpaeng.com

REGISTERED PROFESSIONAL LAND SURVEYOR 57280 MARK R. SANDWICK Date Signed: 3/02/21 ARIZONA, U.S.A.

EXHIBIT A
LEGAL DESCRIPTION

THENCE N 00°45'32" W, ALONG SAID EAST PUFE LINE, A DISTANCE OF 196.92 FEET AND THE BEGINNING OF A NON-TANGENT CURVE TO THE LEFT FROM WHICH POINT THE RAIDIUS POINT BEARS S 89°14'28" W;

THENCE ALONG SAID NON-TANGENT CURVE TO THE LEFT AND ALONG SAID EAST PUFE LINE HAVING A RADIUS OF 1811.00 FEET, THROUGH A CENTRAL ANGLE OF 02°05'20" AND HAVING AN ARC LENGTH OF 66.02 FEET TO THE POINT OF BEGINNING.

THE ABOVE DESCRIBED PARCEL CONTAINS 178,027.66 SQUARE FEET OR 4.0869 ACRES OF LAND, MORE OR LESS, INCLUDING ANY EASEMENTS OF RECORD.

THE BASIS OF BEARING FOR THE ABOVE DESCRIPTIONS IS S 89°29'18" E FOR THE SOUTH LINE OF THE SOUTHWEST QUARTER OF SECTION 32, TOWNSHIP 1 SOUTH, RANGE 7 EAST OF THE GILA & SALT RIVER MERIDIAN, CITY OF MESA, MARICOPA COUNTY, ARIZONA, AS SHOWN ON THE PLSS SUBDIVISION RECORD OF SURVEY-MARICOPA COUNTY GEODETIC DENSIFICATION AND CADASTRAL SURVEY RECORDED IN BOOK 609, PAGE 29, MARICOPA COUNTY RECORDS.

Page 4 of 4

SKYBRIDGE
PROJECT No.: 220122
PARCEL 116A

Date: 3/2/21

Preparing Firm: RITOCH-POWELL & Associates
602-283-1177
www.rpaeng.com

REGISTERED PROFESSIONAL LAND SURVEYOR
57280
MARK R. SANDWICK
3/02/21
Date Signed
ARIZONA, U.S.A.

Phoenix-Mesa Gateway Airport Authority
5835 S Sossaman Road
Mesa, Arizona 85212-6014
www.gatewayairport.com

Board Action Item

Re: Resolution 21-10

To:	**Board of Directors**
From:	**R. J. Draper, P.E., LEED AP, CM Engineering & Facilities Director**
Through:	**Scott Brownlee, Deputy Director/COO**
	J. Brian O'Neill, A.A.E., Executive Director/CEO
Subject:	**North Remote Aircraft Parking Apron – CIP 1229 – Ace Asphalt**
Date:	**April 20, 2021**

Proposed Motion

To authorize paving services with Ace Asphalt of Arizona, Inc. (Ace Asphalt) for Asphalt Rehabilitation Services for the North Remote Aircraft Parking Apron Project under CIP 1229, in an amount not to exceed $440,895.76. Additionally, it is requested that this project be amended into and authorized as part of the 2021 Capital Budget Program.

Narrative

Due to the deteriorated condition of the existing infield pavement for the proposed North Remote Aircraft Parking Apron (RON), and the increased demand for RON Parking; the Phoenix-Mesa Gateway Airport staff recommend an Asphalt Rehabilitation project. The proposed area for the RON parking is located, in the infield, north of Taxiway Victor and east of Taxiway Whiskey.

The proposed area of improvement will be approximately 150,000 square feet and will accommodate up to four (4) Group 3 Aircraft with a max tail height of 42'. The project would include, but not be limited to milling down the old asphalt to an acceptable base support, and then replacing it with new asphalt that is capable of supporting the anticipated Group 3 Aircraft.

PMGAA and Ace Asphalt are both participants of the Mohave Educational Services Cooperative (MESC) Purchasing Group. Under MESC, Ace Asphalt was awarded the Paving Contract #19P-ACE-0318, and it is through this competitive selection that PMGAA will utilize Ace Asphalt for paving services. This contract is available upon request.

A quote was obtained utilizing the MESC pricing as noted below:

Ace Asphalt of Arizona, Inc.	$440,895.76

Fiscal Impact

This project is now requested to be included in the FY21 capital budget under CIP 1229 using Non-grant funding with additional funding from Capital Reserves.

Attachment(s)

Proposal

RESOLUTION NO. 21-10

WHEREAS, the Phoenix-Mesa Gateway Airport Authority ("Authority"), a joint powers airport authority formed pursuant to Arizona Revised Statute §28-8521 *et seq.* owns and operates the Phoenix-Mesa Gateway Airport ("Airport"); and

WHEREAS the Authority desires to authorize paving services with Ace Asphalt of Arizona, Inc. (Ace Asphalt) for Asphalt Rehabilitation Services for the North Remote Aircraft Parking Apron Project under CIP 1229, in an amount not to exceed $440,895.76. Additionally, it is requested that this project be amended into and authorized as part of the 2021 Capital Budget Program;

NOW, THEREFORE, BE IT RESOLVED by the Board of Directors of the Authority as follows:

> **The Board of Directors of the Authority hereby authorizes paving services with Ace Asphalt of Arizona, Inc. (Ace Asphalt) for Asphalt Rehabilitation Services for the North Remote Aircraft Parking Apron Project under CIP 1229, in an amount not to exceed $440,895.76. Additionally, it is requested that this project be amended into and authorized as part of the 2021 Capital Budget Program. This resolution also authorizes the Chair or Executive Director/CEO to take such additional actions as necessary to carry out the purposes and intent of this Resolution.**

Passed and adopted by the Authority this 20th day of April, 2021.

Gail Barney, Chair

ATTEST:

Misty Johnson, Clerk of the Board

APPROVED AS TO FORM:

Jill Casson Owen, Attorney

We're on it.

Arizona | California | Colorado | Nevada | New Mexico | Texas

March 31, 2021

SUBMITTED TO:
Phoenix Mesa Gateway Airport
Rich Adams

480-988-7520
6263 S Taxiway Cir
Mesa, AZ 85212

WORK TO BE PERFORMED AT:
Phx Mesa Gateway Airport
Terminal Apron
5835 South Sossaman Road
Mesa, AZ 85212

SUBMITTED BY:
Tad Peters
Account Executive

P: 602-320-6366
F:
E: peterst@aceasphalt.com

3030 South 7th St
Phoenix, AZ 85040

MOHAVE EDUCATIONAL SERVICE CO-OP BID

CONTRACT NUMBER: 19P-ACE-0318
SPECIAL NOTE:
The terms and conditions of Mohave Educational Services Co-Op Bid, Contract Number 19P-ACE-0318 will prevail over any and all terms and conditions stated in the proposal.
Prices are valid until April 27th, 2021.

SCOPE OF WORK

MILL 2" PAVE 3"

Bid Scope:

Move Ins: (1) Mill/Pave (1)

Dust Permit

Water Meter

Barricades (Ace Scope Only)

Saw Cut 3” Thick Asphalt as Necessary

Mill Existing 2” Thick Asphalt (150,000 Square Feet)

Haul Off Demolished Material as Necessary

Apply Hot Oil (150,000 Square Feet)

Install Paving Fabric (150,000 Square Feet)

Pave 3” Thick ½” Asphalt (150,000 Square Feet)

EXCLUSIONS, EXCEPT AS NOTED ABOVE: Bonds, Testing, Permits, Project Engineering, Survey and Layout Staking, Repair of Irrigation, Landscaping, Private Locators, Gate Loops, Weekend Work, Concrete, Subgrade Stabilization, Signs, Speed Bumps, Striping, Utility Adjustments, Wheel Stops, Asphalt Other than Described Above.

Proposal is valid only if signed and returned prior to 4/25/2021.

Due to volatile materials pricing beyond our control, this scope of work is required to be completed by 6/30/2021. If for any reason this scope of work is not completed by 6/30/2021, then additional funds may be required.

Ace is not liable for drainage on projects with less than 1% fall. Due to existing conditions and matching elevations of concrete curbs, buildings and/or asphalt, we may not be able to raise or lower elevations in order to achieve proper slope to prevent standing water, therefore ponding of water may occur.

Ace Asphalt is not liable for damage to underground utilities not located by the owner prior to the start of work.

Due to the existing condition of asphalt on this project, it is reasonable to believe that wet subgrade soils may be present. The extent of this saturation (if any) cannot be completely assessed without removal of the existing asphalt surface. Should the subgrade be saturated, available solution alternatives will be proposed and additional funds and/or construction time may be required by the client to correct the saturation concerns.

Bid is based on existing asphalt being removed by milling is 2” thick, without fabric. If the existing asphalt being removed by milling varies from this thickness or fabric is encountered then the client may need to authorize additional funds.

Bid includes move-ins as listed above. Additional move-ins may require additional funds.

Work area is to be unobstructed prior to mobilization.

BOND

Payment and Performance Bond as needed.

At Ace Asphalt, we don’t just build surfaces. We build trust. And we look forward to building yours.

PRICING

PHASES	
Mill 2" Pave 3"	$412,958.56
Bond	$5,368.46
SUBTOTAL	$418,327.02
Estimated Tax	$22,568.74
PROPOSAL TOTAL	**$440,895.76**

EXCLUSIONS, UNLESS NOTED ABOVE:
Bonds, testing, engineering. permits, taxes, soil sterilant, caulking/grouting, wire or fiber mesh, dowels, colored concrete, decorative finishes, utility adjustments, or landscaping/landscape irrigation repairs; Correction of drainage issues or pre-existing subgrade deficiencies; Crack seal adjacent to concrete sidewalks and curbing; Single coat sealing applications and cracks over 2" in width are excluded from warranty (per manufacturer specifications); Work performed on weekends may incur an additional charge.

NOTE: According to Arizona Law, any purchase order issued with an aggregate total over $100,000.00 will need to have a payment and performance bond issued for 100% of the work performed. For additional information, please contact Mike Jensen at 602-304-4023.
NOTE: When you decide to accept this proposal, please make your PO out directly to Ace Asphalt of Arizona, Inc., then fax your PO to Mohave Educational Services, Inc. at 928-718-3232 for verification of pricing and to Ace Asphalt at 602-304-2725. The Mohave contract number: 19P-ACE-0318, must appear on your PO. Once Mohave approves the PO for compliance, they will notify Ace Asphalt to proceed with the Work.
Sales Tax may vary based upon completion time of the project and any tax rate changes made by the state, city or county regulations.
TERMS: NET 30 DAYS AFTER COMPLETION OF WORK.
ACCEPTANCE: Ace Asphalt of Arizona, Inc., is authorized to proceed with the work as specified. Payment will be made according to the terms listed above.

Authorized Signature	Title
Print Name	Date
Legal Property Owner Name	Invoice Addressee
Scheduling Contact	Invoice Mailing Address

TERMS AND CONDITIONS

General Conditions

All surfaces to which material is to be applied shall be in a condition that is similar to the time at which the project was bid. Customer shall notify Ace in advance when the site will be ready for the work to be performed, and shall give free and unobstructed access so that the work to be performed hereunder can be commenced promptly, and that once begun, may be completed without delay. Customer agrees to pay Ace its reasonable charges for delays caused by Customer. Towing of vehicles, if necessary, shall be the responsibility of Customer.

Ace Asphalt is not responsible for making any site conditions or improvements ADA compliant unless directed by the customer to do so. If directed by the Customer, Ace Asphalt will make the recommended changes and additional charges may apply. Ace Asphalt also recommends the use of a certified ADA consultant for site evaluations and recommendations as required by Federal and State laws.

Customer is solely responsible for maintaining its properties in full compliance with the ADA and agrees to indemnify and hold Ace Asphalt harmless from and against any and all liability, claims, damages or expense, including attorneys fees, relating in any way to ADA requirements or issues.

Traffic control will be provided by Ace unless otherwise specified. It shall become the responsibility of Customer to maintain barricades and/or closures if required after Ace's personnel leave the site.

A water supply source shall be furnished by Customer for Ace’s use on this project.

Ace does not assume responsibility for any utility lines such as water, electric, sprinkler, etc., which may lie within eighteen inches (18") of the surface. Layouts of locations must be furnished to Ace if such lines are known to exist. Failure to furnish information in this regard will cause Customer to carry responsibility in case of any damage and repairs to such lines.

Customer shall be represented by one spokesperson, who shall have the authority to accept work performed, authorize and sign for any additions or changes desired, and will be available for consultation with Ace's representative.

Customer grants permission to Ace to create photos or videos of the site for use in promotion of its business services.

Taxes are computed for the locality in which the work is performed at the time the project is invoiced. Taxes can be waived, by law, only upon receipt of an exemption certificate that has been properly executed by responsible party to this contract.

Ace reserves the right to submit progress billings to Customer on a weekly, bi-weekly, or monthly basis. Customer agrees to pay progress billings in accordance to our terms and conditions.

Indemnification

Ace maintains adequate insurances and shall indemnify and hold harmless Customer, Owner, and agents and employees of any of them from any claims, damages, losses and expenses arising out of or resulting from performance of the Work to the extent caused by the negligent acts or omissions of Ace or anyone for whose acts Ace may be liable.

Warranty

The work proposed herein is covered by a 30 month warranty on workmanship. Normal wear and tear, abuse, accidental damage, and acts of God are excluded.

Disputes

If Customer objects to any portion of the work, Customer will so notify Ace within seven (7) calendar days, identify the cause of disagreement, and pay when due that portion of the invoice not in dispute. The parties will immediately make every effort to settle the disputed portion of the invoice.

The parties hereby agree that, in any legal action arising from this Agreement, venue for the action may properly be placed in the county of the Ace office that issued this contract. The parties acknowledge that they are hereby voluntarily and knowingly relinquishing and waiving any rights they may have to establishing venue in any other county. This Agreement shall be in accordance with and governed by the laws of the state of Arizona. If

a court finds that any provision of this Agreement is not valid or should not be enforced, that fact by itself will not mean that the rest of this Agreement will not be valid or enforced. Therefore, a court may enforce the rest of the provisions of this Agreement even if a provision of this Agreement may be found to be invalid or unenforceable.

Our Commitment to the Environment

Ace believes in employing sustainable practices that are both socially responsible and commercially sound. From material recycling strategies to pollution prevention initiatives, we are committed to minimizing our environmental impact while improving the well being of the communities we serve.

Confidentiality

The information in this document is privileged and confidential. No part of this document may be reproduced and/or distributed to anyone other than the recipient listed on this document without written permission from Ace.

Contract Time and Liquidated Damages:

1. Ace Asphalt and PMGAA recognize that time is of the essence of this Project/Agreement and that PMGAA will suffer financial loss if the work is not Substantially Completed or Finally Completed within the times specified below.

2. Ace Asphalt shall achieve Substantial Completion (as defined below and evidenced by a Certificate of Substantial Completion) of the Scope of Work no later than thirty (30) calendar days after the issuance of the Notice to Proceed.

3. Final Acceptance of the work shall occur not more than thirty (30) calendar days after the Substantial Completion date.

4. The parties acknowledge and agree that it would be extremely difficult and impracticable to ascertain the damages that the PMGAA would incur should Ace Asphalt fail to achieve, (1) Substantial Completion of the work by the milestone completion date(s), or (2) Final Acceptance of the work, as specified in this Article. Accordingly, if Ace Asphalt fails to achieve (1) Partial Acceptance, (2) Substantial Completion, or (3) Final Acceptance of the work as specified in this Article, Ace Asphalt shall be liable for and shall pay to the PMGAA liquidated damages for each calendar day of delay until Ace Asphalt achieves (l) Partial Acceptance, (2) Substantial Completion, or (3) Final Acceptance of the work as the case may be. The liquidated damages shall be as follows:

   The following Liquidated Damages apply:

   a. Substantial Completion of the Scope of Work (All Phases, 30 Calendar days) $430 Day

   The following Liquidated Damages will also apply:

   b. Final Completion within thirty (30) Calendar Days of Substantial Completion of the project - $430 per Day

   PMGAA shall have the right to retain any liquidated damages from payments due Ace Asphalt.

Substantial Completion:

1. Defined. Substantial completion is the stage in the progress of the work when all of the work is complete in accordance with the Contract Documents and Proposal, so the PMGAA can occupy or utilize the project for its intended use. For the project and each construction phase to be substantially complete, the following items must be completed in accordance with the Contract Documents/Proposal: [Mill 2" of existing asphalt for 150,000 square feet, haul off of demolished material as necessary, application of hot oil to base, place paving fabric per manufacturers recommendation, pave back 3" thick ¾" asphalt in the 150,000 square feet]. The project area must be open and fully operational for airport and aircraft operations use as intended and shown in the plans. The purpose of granting or acknowledging substantial completion is to stop Contract time. Granting of substantial completion will eliminate the possibility of incurring liquidated damages or additional

liquidated damages beyond the substantial completion date, whichever case may apply. 2. The date of substantial completion shall be the date the Engineer receives, in writing, notification from Ace Asphalt, that the work is substantially complete. If upon inspection the project Engineer determines that the project is not substantially complete and/or not ready for inspection, the date of notification from Ace Asphalt will become void. In the event that the Engineer grants substantial completion, Ace Asphalt shall have thirty (30) calendar days thereafter to complete punch list work, unless the Engineer grants additional time in writing. In no case shall Ace Asphalt be granted more than thirty (30) calendar days to complete punch list work unless there are extenuating circumstances such as a labor strike or circumstance beyond Ace Asphalt's control that would necessitate a further time extension.

Insurance:

1. In addition to the insurance requirements stated in the Mohave Educational Services Contract No.19P-ACE-0318, PMGAA requires Ace Asphalt to provide General Liability and Automobile Liability limits total of $5,000,000 each.

Security Requirements:

This project will be constructed inside the Airport Perimeter Security Fence.

1. The airport is operated in strict compliance with Transportation Security Administration (TSA) and Federal Aviation Regulations (FAR), which prohibit unauthorized persons or vehicles in the Air Operations Area (AOA). Equipment and workmen will be restricted to the work area defined on the plans. Any violation by Contractor's personnel or sub-contractors will subject Ace Asphalt to penalties imposed by the TSA or the Authority.

   Ace Asphalt will assume all fines against the Authority assessed to them by the TSA for Ace Asphalt's security violations. Typical fines are ten thousand dollars ($10,000.00) or more per incident.

   Ace Asphalt shall be responsible for the protection of the construction site, and all work, materials, equipment, and existing facilities thereon, against vandals and other unauthorized persons. Security measures shall include such additional security fencing, barricades, lighting, and other measures as Ace Asphalt may deem necessary to protect the site.

   Ace Asphalt's responsibilities for work areas are as follows:

   a. Ace Asphalt shall be held responsible for controlling his employees, subcontractors, and their employees with regard to traffic movement.

   b. Ace Asphalt shall rebuild, repair, restore, and make good at his own expense all injuries or damages to any portion of the work occasioned by his use of these facilities before completion and acceptance of his work.

   c. Ace Asphalt shall submit to the Engineer in writing a detailed work plan for each construction phase. The work plan shall include, but not be limited to, temporary

electrical facilities, installation sequence of underground electrical and storm sewer systems, paving sequence, and installation sequence of electrical items. **This plan shall be submitted 14 calendar days prior to the start of each construction phase.** No work within the construction phase may commence until the phase work plan is approved.

d. Ace Asphalt shall employ a full time traffic manager

e. The following language shall be used in all solicitations, Contracts and subcontracts requiring the distribution of security badges to Contractor, subcontractor or material supplier employees:

1) **AIRPORT ACCESS BADGES** - All Contractor and/or subcontractor personnel performing work functions in accordance with this Contract shall obtain and properly display a Phoenix-Mesa Gateway Airport (IWA) airport security badge. Ace Asphalt shall submit a Security Badge Application form to the Authority security office for each employee requiring unescorted access, along with the current fee for each badge. The fee must be paid for with cash or check. The Security Badge Application form and instructions are available via the Internet at www.gatewayairport.com.

   A Company Principal of Ace Asphalt must obtain and submit a "Company Security Media Authorization" form, which is to be submitted to the Authority Badging Office. The Company Security Media Authorization will identify those individuals employed by Ace Asphalt who are authorized to approve and sign a Security Badge Application for other employees of Ace Asphalt. The Company Security Media Authorization form and instructions are available via the Internet at www.gatewayairport.com

   i. All Contractor and sub-Contractor personnel that are to be issued an Airport Identification Badge are required to attend and successfully complete a training class before being issued an identification badge. Fees for the security badge include attendance for the necessary training classes. Attendance at the security classes and issuance of the security badge may take 2 hours per person.

      The types of training required will be determined by the scope and location of the work involved. All personnel that will receive Airport badges shall attend the security training. Additionally, personnel operating vehicles or equipment within the Restricted Area of the airport will attend Airport Driver training, all personnel working near active movement areas will attend the Operational Safety on Airports training and any personnel acting as a Gate Guard/Crossing Guard will attend the Gate Guard/Crossing Guard training.

   ii. Additional information, including a "Frequently Asked Questions" is available via the Internet at www.gatewayairport.com or by contacting the Authority

Badging Office at 480.988.7520 or via email to
badgingoffice@gatewayairport.com
The Badging Office is located at 6263 S. Taxiway Circle, Mesa AZ 85212.

iii. Ace Asphalt should allow thirty (30) business days lead time for employee badges to be issued.

iv. Ace Asphalt shall immediately notify Airport Operations/Badging Office of any Contractor personnel whose employment status has changed.

v. Ace Asphalt shall be responsible for retrieving all security badges and keys and return them to the Badging Office. A fee will be charged for each badge that is damaged, lost or not returned.

vi. The Authority Badging Office will require the following from each badge applicant before a security badge is issued:

1. **Security Badge Application** - All employees are required to complete a security badge application form. The security badge application is available via the Internet at www.gatewayairport.com.

2. **Contractor-Provided Escorts** - The job superintendent and assistant superintendent will be responsible for escorting their non-badged employees, visitors, vendors, subcontractors and material suppliers while on the job site, assuring that no breeches of the Airport security program occur.

3. **Company Security Media Authorization** - A Principal of Ace Asphalt is required to complete and submit to the Authority Badging Office this form, which identifies authorized signatories for Ace Asphalt.

vii. For current badging hours or any other questions pertaining to badging, please call the Badging Office at 480.988.7520.

viii. Airport security badges are issued by the Authority Airport Operations and will be required when working within the Restricted Area. It is recommended that Superintendents, Foremen, Supervisors, or Leads be issued an airport security badge who then can provide the required escort for their work crew.

- Airport ID badges issued by the Airport are property of the Airport and must be surrendered upon the request of any Airport personnel.
- No person shall loan or provide airport ID badges to anyone other than to whom the badge was issued.
- Airport ID badges must be properly displayed on the outermost garment, above the waist, at all times while within the Restricted Area.

- Airport ID badges shall not be mutilated or altered from its original form in anyway, nor shall any such media be reproduced or copied in such a manner as to degrade the security of the ID system.
- Airport ID badges are non-transferable.
- Damaged badges will be subject to a replacement fee.
- Contractors are required to wear the armband that accompanies the badge.
- Ace Asphalt shall be assessed a fee for each lost/unreturned badge.
- Ace Asphalt must immediately report to the Badging Office any lost badge or any employee who quits or is terminated, and the employee's badge must be returned to the Authority.

2) **Access Control -** Any time access is required within the Restricted Areas Ace Asphalt shall be responsible for assuring that no breeches of airport security occur. Restricted areas are fenced and must remain fenced at all times. The gates will remain closed and locked or a guard will be provided at Ace Asphalt's expense. Ace Asphalt will furnish the guard with a roster of his personnel and ensure that each individual has adequate identification. The duplicate keys for each lock will be turned over to the airport authorities.

- No person shall enter Ace Asphalt worksite without authorization. Any person found within the worksite without proper identification as describe herein shall be considered unauthorized and shall be removed from the worksite.
- All persons authorized access to the worksite shall display a valid Airport ID badge issued by the Authority or be under authorized escort.
- Persons authorized to provide escorts include the Authority staff and designated Contractor supervisors. The number of personnel being escorted shall not exceed ten (10) non-badged personnel; this includes vendors, subcontractors, visitors and part- time workers. Equipment Operators are not allowed to provide escort while operating equipment. **Failure to provide an escort can result in loss of escort privileges, fines, revocation of the security badge, or all three.**

3) **Challenge Procedures -** All personnel are responsible for challenging and reporting anyone in their work areas not displaying an Airport ID badge. Personnel shall contact Airport Operations and/or Mesa Police Department and detain person(s) if safe to do so.

<u>Security Requirements:</u>

1. Operating Construction Vehicles on the Airport
   No vehicle shall enter Ace Asphalt worksite unless the following conditions are met:

   - The driver is authorized to access the worksite (in possession of valid security badge with a driver endorsement).

- The driver possesses a valid driver's license.
- The vehicle is properly marked with the company name.
- Vehicle is marked with beacon or checkered flag or under escort.
- Transient haul truck drivers are not required to obtain an Airport ID badge but are required to check in with Ace Asphalt security guard.
- All equipment operators are required to be badged when working within the Airport Restricted Area.

2. Prohibited Vehicles
   The use of motorcycles, bicycles, two-wheeled motor scooters and privately owned vehicles within the worksite is strictly prohibited.

3. Vehicle Condition
   Vehicles must be in good mechanical condition with operational lights, horn, brakes, and clear visibility from the driver's seat. Trailers and semi-trailers must be equipped with proper brakes so that when disengaged from a towing vehicle, neither aircraft engine blast nor wind will cause them to become free rolling.

4. Compliance
   All traffic within the Airport Restricted Area and/or Contractor worksite must comply with any lawful order, signal or direction of any Airport employee. When such traffic is controlled by signs or pavement markings, such symbols shall be obeyed, unless otherwise directed by an officer or agent of the Airport Authority.

5. Night or Low Visibility Operations
   All vehicle headlights, taillights, and running or clearance lights shall be in operational condition. Headlights shall be used at all times.

6. Construction Vehicle and Equipment Markings
   All construction equipment and vehicles shall have flashing amber lights, mounted at the highest point, during the nighttime and a 3' x 3' orange and white checkered flag or a flashing amber beacon during the daytime. All vehicles and equipment on the construction site shall have company designations visibly displayed. No personal vehicles will be allowed in the work area. All construction vehicles and equipment must have the company name and/or logo and vehicle number at least four (4) inches in height on each side of the vehicle.

7. Operation of Vehicles
   No vehicle shall operate within the Airport Restricted Area:

   - Unless operated by an individual in possession of a valid Airport Identification Badge with a drivers endorsement or, under the direct escort of someone who is.
   - In a careless or negligent manner.
   - With disregard of the rights and safety of others.
   - At a speed or in a way which endangers persons or property.
   - While the driver is under the influence of drugs or alcohol.
   - If such vehicle is loaded or maintained as to endanger persons or property.

8. Speed Limits
The speed limit on the perimeter roads is 25 miles per hour. The speed limit on the haul route is 15 miles per hour.

9. Vehicle Accidents
Each operator of a motor vehicle involved in an accident on the airport that results in damage to property or personal injury shall first contact 9-1-1 and then report it fully to the Airport Operations Department as soon as possible after the accident. The report must include the name and address of the person reporting. Copies of reports taken by City of Mesa are acceptable for incidents that occur in the public areas of the airport.

10. Hearing Protection
Contractor personnel working on or adjacent to the AOA are encouraged to wear hearing protection.

11. Worker Injuries
In the event of a serious injury requiring medical attention call 911. If called from a cell phone, tell the emergency operator to connect to the City of Mesa Emergency Dispatch, otherwise the call will be routed to Maricopa County Dispatch and that will delay emergency response. All injuries must also be reported to Airport Operations as soon as possible.

12. After Hours Contacts
Ace Asphalt shall submit to the Engineer a list of personnel who can be contacted 24 hours a day, seven (7) days a week and can respond in a reasonable time frame regarding any possible emergency on the work site. The list must include names, job title and phone numbers.

13. Daily Site Inspections
Prior to Ace Asphalt leaving the worksite for the day, an inspection of the site shall be completed. All discrepancies noted in the inspection must be corrected to the satisfaction of the Engineer prior to Ace Asphalt leaving the worksite.

14. Deliveries
All deliveries for Ace Asphalt shall be received by Ace Asphalt. Deliveries will not be accepted by anyone other than Ace Asphalt. The Authority nor its authorized representatives will not accept or be responsible for deliveries.

15. Haul Routes

- The majority of the haul route is in the City of Mesa Public Right-of-Way and Contractor shall abide by City of Mesa Traffic regulations. Contractor shall maintain access in the vicinity of the haul routes to provide access to the parking lot and the Authority vehicles.
- Placards will be issued to transient haul trucks (i.e. concrete) upon entry into the

Restricted Area by the gate guard.

16. Cranes or Mobilized Equipment

All activities involving cranes or mobilized vehicles exceeding 20 feet in height on or near the AOA require 48-hour advance coordination with Airport Operations. The following information is required:

- Location of equipment
- Maximum extendable height
- Duration of use
- Daily hours of operation
- Whether or not the crane can be lowered when not in use

Equipment must be lowered to its stowed height when not in use or as otherwise directed. The highest point of each piece of equipment shall be marked by a 3' x 3' orange and white checkered flag. At night and during periods of low visibility, the highest point of the crane must be marked by a red obstruction light. Crews must be prepared to remove equipment promptly if so directed.

- Ace Asphalt is advised that it may take up to 12 weeks to obtain an airspace determination for construction equipment (such as a concrete batch plant if he elects to use one), and he must submit information required for inclusion into the 7460 airspace evaluation submittal as soon as feasible after Notice Of Award in order to not delay the project schedule. This review should be included in Ace Asphalt's schedule.

17. Staging & Storage Area

All Contractor materials, equipment and supplies shall be within Ace Asphalt's designated staging & storage area. All staging & storage areas shall be marked, debris boxes covered and area kept neat and clean of debris.

For equipment that must remain in the work area, the following conditions must be met:

- Be marked with lighted barricades around the equipment perimeter with a spacing of no more than 10 feet.
- Be coordinated at least 48 hours in advance with the Engineer.
- The highest point of the equipment marked and lit with a red flashing/steady burning omni-directional obstruction light.

18. Barricades & Lighting

The perimeters of the actual work areas, all uneven surfaces, mounds and excavations shall be adequately barricaded in accordance with the plans and contract documents including but not limited to vertical panel barricades, low level barricades and/or Type II barricades and lighted with omni-directional flashing red lights to prevent intrusion by taxiing aircraft, equipment, personnel and vehicles.

Ace Asphalt shall provide and maintain all low-profile and vertical panel barricades and LED omni-directional lights, night and day. The lights for the low-level barricades shall be capable to be "screwed in" to the barricade. Low-profile barricades shall be orange and white in color and shall be a minimum of eight (6) feet in length and approximately ten (10) inches in height. All cones and other marking devices must be lighted or equipped with reflectors during periods of darkness as directed by Airport Operations.

All barricades, lights, flags and cones must be maintained and kept in proper working order by Ace Asphalt day and night. All burnt out lights must be replaced immediately. Barricades, lights, flags and cones must remain upright at all times.

The low-profile barricades must always be filled with water. In situations of adverse weather, the placement of sandbags on barricades may also be required. Ace Asphalt must also keep an adequate supply of extra barricades and lights on site for replacement. Escorts for barricade maintenance must be provided by Ace Asphalt or coordinated in advance with Airport Operations.

Only red, battery powered or approved solar powered, lights are acceptable at the airport.

19. Trenches and Excavations
Contractors shall close trenches located within active safety areas at the end of each workday. No open trenches or excavations will be allowed within the following active safety areas without prior coordination and approval with the Engineer:

- Open trenches not to exceed 500 feet in length at any one time.
- Spoils from excavations are to be placed closest to the trench.
- Spoils length not to exceed 500 feet in length at any one time.
- Spoil height is not to exceed 4 feet or any height that would cause a visual obstruction.
- Spoils not returned to the trench or removed from the worksite are to be properly marked with lighted barricades with a spacing of no more than 10' or that to properly delineate the trench.

20. Stockpiled Material
Stockpiled materials are allowed only within Ace Asphalt's designated staging & storage areas.

21. Contractor Security Guards
The following procedures are for Contractor security guards controlling Contractor access gates into the Restricted Areas. Also responsible to:

- Use primary radio or back-up telephone equipment to contact Airport Operations and Ace Asphalt Foreman of any security violation or threat to airport safety. Report any failure of radio or back-up equipment immediately.
- Assure that all authorized Contractor employees or suppliers use designated haul route and staging areas.
- Monitor the Restricted Area access gate at all times and NEVER leave a gate open, unsecured or unattended.

22. Deliveries

Delivery trucks must be properly escorted in order to proceed to their intended area. The gate guard shall log down the date, driver name, and company. Advise the driver to wait at the gate until the escort arrives.

23. Haul Trucks

Transient haul truck drivers are required to check in with Ace Asphalt security guard. The driver shall be issued an orange/white checkered flag to be mounted on the highest point of the truck; and shall be returned to the security guard upon check out. Advise the driver to remain on the marked haul route and follow the appropriate signs to the intended work area. At no time shall a driver unfamiliar with the worksite be allowed to deviate from the marked haul route.

24. Weapons

No person, except a peace officer, authorized air carrier employee, airport employee or a member of an armed force of the United States on official duty, shall carry any weapon, explosive, or inflammable material on or about his person, openly or concealed, in the Restricted Area of the airport without the written permission of the Airport Director, Deputy Director or Director of Operations and Maintenance. A weapon includes all those listed in Section 13-301, Arizona Revised Statutes. No person shall furnish, give, sell, or trade a weapon on airport property.

25. Contractor Responsibilities

- Ace Asphalt must maintain and provide to the Engineer a log detailing the contract number, the airfield access point used, and all authorized and anticipated subcontractors and suppliers that will be requiring entry.
- Ace Asphalt must furnish guards with a sufficient number of flags for transient vehicles such as concrete or asphalt trucks entering the Restricted Area.
- Ace Asphalt must furnish guards a means of securing the access point should the guard have to leave the area in an emergency.

26. Construction Flagmen

Construction flagmen will be required at any crossings of taxiways by construction equipment.

27. Prepare a Safety Plan Compliance Document

Ace Asphalt shall be responsible to provide a Construction Safety and Phasing Plan compliance document at the Preconstruction Conference. The Safety Plan Compliance Document (SPCD) details how Ace Asphalt will comply with the CSPP (Appendix A). Also, it will not be possible to determine all safety plan details (for example specific hazard equipment and lighting, Contractor's points of contact, construction equipment heights) during the development of the CSPP. The SPCD is a subset of the CSPP, similar to how a shop drawing review is a subset to the technical specifications. The effort required to prepare and submit a SPCD acceptable to airport operations shall be considered incidental to the Airfield Safety and Security line item provided in the bid, (SP-60.04.1).

28. Temporary Pavement Markings

Temporary Pavement Markings shall be placed at the locations shown on the plans. Markings shall be consistent with the details in the plans for markings of the same type (i.e. Taxiway Centerline). The paint material shall be of such quality as needed to last the duration of the respective construction phase. All temporary pavement markings, materials, labor, equipment and efforts required to remove the temporary pavement markings shall be considered incidental to Airfield Safety and Security (see SP 60.04 below), (i.e. there will be no separate measurement or payment), unless noted otherwise on the plans.

Phoenix-Mesa Gateway Airport Authority
5835 S Sossaman Road
Mesa, Arizona 85212-6014
www.gatewayairport.com

Board Action Item

Re: Resolution 21-11

To:	**Board of Directors**
From:	**Ryan Smith, C.M. Communications & Government Relations Director**
Through:	**Scott Brownlee, Deputy Director/COO** **J. Brian O'Neill, A.A.E., Executive Director/CEO**
Subject:	**Brochure Display and Distribution Concession Agreement – Certified Folder Display Service, Inc.**
Date:	**April 20, 2021**

Proposed Motion

To authorize a Brochure Display and Distribution Concession Agreement with Certified Folder Display Service, Inc. The agreement term is four years with two two-year renewal options, commencing October 1, 2021 with a Year 1 Minimum Annual Guarantee (MAG) of $4,500 and percentage rent of 30%.

Narrative

Passenger demand for tourism information has existed since the Phoenix-Mesa Gateway Airport terminal first opened. PMGAA staff operated a brochure program internally for years, but due to limited staff and inventory resources, the program was outsourced in 2015. Services under the contract include overseeing sales, inventory, and restocking of two racks multiple times per week in the baggage claim area of the terminal.

Solicitation 2021-015-RFP for Brochure Display and Distribution Service was issued on November 2, 2020 and advertised in the Arizona Business Gazette November 5, 12, 19, and 26 as well as advertised on the following websites, including Gateway's website: Arizona Airports Association, ACI-NA, and FAA Airport Concession Disadvantaged Business Enterprise Match Maker. In addition, the RFP notice was emailed to two companies. No proposals were received. According to PMGAA's Procurement Policy, staff documented that the solicitation was not restrictive.

Staff contacted Certified Folder Display Services, Inc. (CFDS) and reached an agreement for them to provide the needed services. In negotiating the new agreement, staff reviewed the MAG amount and percentage rent from previous years. The new agreement will have the same terms as the previous agreement with a Year 1 MAG of $4,500 and a percentage rent of 30%.

Fiscal Impact

This agreement has a term of four years with two two-year renewal options, a Year 1 MAG of $4,500, and percentage rent of 30%.

Attachment(s)

Brochure Display and Distribution Concession Agreement

RESOLUTION NO. 21-11

WHEREAS, the Phoenix-Mesa Gateway Airport Authority ("Authority"), a joint powers airport authority formed pursuant to Arizona Revised Statute §28-8521 *et seq.* owns and operates the Phoenix-Mesa Gateway Airport ("Airport"); and

WHEREAS the Authority desires to authorize a Brochure Display and Distribution Concession Agreement with Certified Folder Display Service, Inc. The agreement term is four years with two two-year renewal options, commencing October 1, 2021 with a Year 1 Minimum Annual Guarantee (MAG) of $4,500 and percentage rent of 30%;

NOW, THEREFORE, BE IT RESOLVED by the Board of Directors of the Authority as follows:

> **The Board of Directors of the Authority hereby authorizes a Brochure Display and Distribution Concession Agreement with Certified Folder Display Service, Inc. The agreement term is four years with two two-year renewal options, commencing October 1, 2021 with a Year 1 Minimum Annual Guarantee (MAG) of $4,500 and percentage rent of 30%. This resolution also authorizes the Chair or Executive Director/CEO to execute such Agreement, with such insertions, deletions, and changes as may be approved by the Chair or Executive Director/CEO, necessary to carry out the purposes and intent of this Resolution.**

Passed and adopted by the Authority this 20th day of April, 2021.

Gail Barney, Chair

ATTEST:

Misty Johnson, Clerk of the Board

APPROVED AS TO FORM:

Jill Casson Owen, Attorney

Phoenix-Mesa Gateway Airport Authority

Brochure Display and Distribution Concession Agreement

with

Certified Folder Display Service, Inc.

Effective Date: October 1, 2021

Table of Contents

1. AGREEMENT 3
2. TERM 5
3. RENT AND FEES 5
4. RECORDS AND AUDITING 8
5. CONDITION OF DISPLAY AREAS; INSTALLATIONS 8
6. MAINTENANCE, REPAIRS, AND SERVICES 9
7. CONCESSIONAIRE'S COMPLIANCE 9
8. AIRPORT SECURITY PLAN 11
9. TAXES, LICENSES, AND PERMITS 11
10. INSURANCE AND INDEMNIFICATION 11
11. ASSIGNMENT 12
12. DEFAULT; TERMINATION 13
13. NONWAIVER 15
14. APPLICABLE LAW 15
15. RULES AND REGULATIONS 15
16. CORPORATE AUTHORIZATION 15
17. NOTICES 15
18. ACDBE REQUIREMENTS 16
19. TITLE VI 18
20. MISCELLANEOUS 20
21. INCORPORATION OF RECITALS 20
ATTACHMENT 1 ..... A-1
ATTACHMENT 2 ..... A-2
EXHIBIT A A-1
EXHIBIT B B-1
EXHIBIT C C-1

Phoenix-Mesa Gateway Airport Authority
BROCHURE DISPLAY AND DISTRIBUTION CONCESSION AGREEMENT

This exclusive BROCHURE DISPLAY AND DISTRIBUTION CONCESSION AGREEMENT (the "Agreement") is made and entered into this FIRST (1st) day of OCTOBER 2021 (the "Effective Date"), by and between **PHOENIX-MESA GATEWAY AIRPORT AUTHORITY**, a joint powers airport authority authorized and existing under the laws of the State of Arizona ("PMGAA"), and **CERTIFIED FOLDER DISPLAY SERVICE, INC.**, a California corporation authorized to do business in Arizona ("Concessionaire"). PMGAA and Concessionaire may be referred to as "Parties," and each separately as a "Party."

WITNESSETH:

WHEREAS, PMGAA is the owner and operator of Phoenix-Mesa Gateway Airport, an airport and airfield property generally located at the intersection of Ray Road and Sossaman Road, City of Mesa, Maricopa County, Arizona (the "Airport"); and

WHEREAS, PMGAA has the right to lease, license, and grant the use of property and facilities on the Airport and has full power and authority to enter into this Agreement in respect thereof; and

WHEREAS, PMGAA operates and maintains the Ticketing Terminal, Fergie and Feller Field outdoor courtyard, Annex, and Arriving Terminal at the Airport which houses facilities for passenger processing and related services and amenities (the "Terminal"); and

WHEREAS, PMGAA desires Concessionaire's services as the operator of a brochure display and distribution service including selling of the brochure slots with third party companies for display and distribution at the Airport and Concessionaire desires to perform and provide said services;

NOW, THEREFORE, in consideration of the foregoing and of the mutual covenants and agreements herein contained, the Parties do hereby undertake, promise and agree, each for itself and its successors and assigns, as follows:

1. AGREEMENT

1.1 General.

1.1.1 PMGAA hereby grants to Concessionaire, for the Term and under the conditions herein provided, a nonexclusive and revocable right to enter upon and use the Airport (pursuant to the provisions of this Agreement) for the purpose of conducting its business as a terminal concessionaire within the terminal in the locations depicted in EXHIBIT A ("Display Areas").

1.1.2 Concessionaire shall finance, design, construct, develop, install, maintain, manage and/or operate prime quality, expertly designed, commercial advertising displays ("Displays") within the Display Areas at the Airport of the type and amount specified in this Agreement in EXHIBIT A. Concessionaire shall keep the displays in a clean and orderly condition at all times and shall keep the displays stocked with brochures and magazines from local/regional visitor attractions, visitor bureaus/agencies, PMGAA licensed ground transportation companies, and local hotels, resorts, RV parks, etc.

1.1.3 Concessionaire shall not engage in any other commercial revenue producing activity at the Airport that is in addition to or materially differs from the activity set forth in this SECTION 1.1 prior to obtaining such written approval, and without waiver or limitation of any other remedies of PMGAA, Concessionaire hereby agrees to immediately cease any unauthorized activity upon notice from PMGAA, and remit to PMGAA the sum

equal to TWENTY-FIVE PERCENT (25%) of gross billings for such unauthorized activity, plus any expenses incurred by PMGAA in the course of any audit conducted for all of Concessionaire's activities.

1.2 Advertising Standards. Advertising subject matter and speech or copy shall be limited to that which proposes a commercial transaction or promotion of tourism. For this Agreement, "Tourism" is defined as the promotion of touring and traveling to a geographical area with the intent to derive commercial revenue from visitors purchasing goods or services.

1.2.1 Advertising must not be displayed that:

(1) Is false, misleading, or deceptive;
(2) Relates or refers to an activity that violates federal, state, or local law;
(3) Contain non-commercial speech;
(4) Advertise airport services and operations for other commercial airports that compete with Phoenix-Mesa Gateway Airport;
(5) Contains explicit sexual material, obscene material, or material harmful to minors as these terms are defined in Arizona Revised Statutes Title 13, Chapter 35;
(6) Advertises alcohol or tobacco products;
(7) Depicts violence and/or anti-social behavior;
(8) Includes language, gestures, conduct, or graphical representations that are obscene, pornographic, vulgar, profane or scatological;
(9) Relates to instruments, devices, items, products, or paraphernalia designed for use in connection with "specified sexual activities" as defined in the City of Mesa Zoning Ordinance and City Code;
(10) May damage the reputation of PMGAA; or
(11) Violates any intellectual property rights of third parties.

The Executive Director has the authority to make a determination on whether an advertisement is in compliance with these standards.

1.3 Concessionaire's Acknowledgement. Concessionaire acknowledges and agrees that its obligations to pay fees and all other charges due and owing under the terms hereof shall, except as otherwise provided herein, be absolute and unconditional, and shall not be affected by any circumstances whatsoever, including, without limitation: (i) any set-off, counterclaim, recoupment, defense or other right which Concessionaire may have against PMGAA or the United States of America or anyone else for any reason whatsoever; (ii) any liens, encumbrances or rights of others; (iii) the invalidity or unenforceability or lack of due authorization or other infirmity of this Agreement or any lack of right, power, or authority of PMGAA or Concessionaire to enter into this Agreement; (iv) any insolvency, bankruptcy, reorganization or similar proceedings by or against Concessionaire or any other person; or (v) any other cause, whether similar or dissimilar to the foregoing, any future or present law notwithstanding, it being the intention of the Parties hereto that all rent and fees being payable by Concessionaire hereunder shall continue to be payable in all events and in the manner and at the times provided herein.

1.4 Concessionaire's Rights. So long as Concessionaire shall timely pay the fees and other charges required to be paid and is not in default of any obligation hereunder, PMGAA hereby grants to Concessionaire the following rights:

1.4.1 A right to peaceably have and enjoy the use of the Display Areas without hindrance from PMGAA, and to occupy and use the Display Areas while in compliance with the terms and conditions of this Agreement.

1.4.2 A right of ingress and egress to and from the Display Areas over Airport roadways, including common use roadways, driveways, and public areas of the Airport, subject to any and all applicable rules

and regulations established from time to time by PMGAA, the United States government, the State of Arizona, the City of Mesa, or other governmental entity, as applicable. Such rights of ingress and egress shall apply to Concessionaire's employees, guests, patrons, invitees, suppliers, and other authorized individuals.

1.4.3 A right to obtain supplies and services for the Display Areas from suppliers, vendors, or contractors of its choosing; provided, however, that all contracts entered into by Concessionaire for provision of labor and employment services shall require that personnel engaged by Concessionaire shall not be disruptive of other personnel or operations at the Airport and that such personnel shall at all times comply with the Airport Rules and Regulations.

1.5 PMGAA's Rights.

1.5.1 PMGAA reserves the right, in its sole discretion, to review Concessionaire's agreements and audit financial records.

1.5.2 In addition to PMGAA's other rights set forth in this Agreement, PMGAA shall have the right (but not the obligation) to substitute Comparable Display Areas for all or any portion of the Display Areas, and any additions, alterations, or improvements thereon, should PMGAA, in its reasonable discretion, determine that taking of the Display Areas, any portion thereof or any improvement thereon, is required for other Airport purposes and there exists no appropriate alternative. For the purposes of this SECTION 1.5.2, the term "Comparable Display Areas" is defined to mean spaces within the Terminal, or any additions or extensions thereof, having the same or similar usefulness to Concessionaire as the portion(s) taken. In the event PMGAA makes the determination to exercise its rights to substitute, all Concessionaire's rights to and interest in the portion of the Display Areas taken shall immediately vest in PMGAA, and such Comparable Display Areas shall be part of the "Display Areas" as defined herein. If any of Concessionaire's improvements or equipment cannot be relocated to the Comparable Display Areas, PMGAA shall replace, at PMGAA's expense, such non-locatable improvements and equipment for the Comparable Display Areas, and PMGAA shall be deemed the owner of the non-relocated improvements and equipment, free and clear of all claims of any interest or title therein by Concessionaire, or any other third party whomsoever. It is the specific intent of this SECTION 1.5.2 that Concessionaire be placed, to the extent possible, in the same position it would have been, had PMGAA not substituted Comparable Display Areas for a portion of the Display Areas so taken; provided, however, that PMGAA shall not be obligated to reimburse Concessionaire for any damages, including lost profits or revenues, due to such substitution. Notwithstanding the foregoing, PMGAA shall use reasonable efforts to avoid disruption to Concessionaire's business.

2. TERM

2.1 Initial Term. The term of this Agreement shall commence on the Effective Date and terminate FOUR (4) years thereafter, on September 30, 2025 (the "Term"), unless sooner terminated as provided herein.

2.2 Renewal Term(s). Provided Concessionaire is not then in default of this Agreement, PMGAA shall have the option, at its sole discretion, of extending the Term for TWO (2) additional periods of TWO (2) years ("Extension"). PMGAA may exercise an Extension by giving written notice to Concessionaire of its desire to do so no later than SIX (6) months prior to the expiration of the then-current Term.

3. RENT AND FEES

3.1 Definitions.

3.1.1 "Agreement Year" means the successive one-year periods during the Term commencing on October 1 and ending on September 30, as following:

Year 1: October 1, 2021 – September 30, 2022
Year 2: October 1, 2022 – September 30, 2023
Year 3: October 1, 2023 – September 30, 2024
Year 4: October 1, 2024 – September 30, 2025

Optional Extension 1
Year 5: October 1, 2025 – September 30, 2026
Year 6: October 1, 2026 – September 30, 2027

Optional Extension 2
Year 7: October 1, 2027 – September 30, 2028
Year 8: October 1, 2028 – September 30, 2029

3.1.2 "Gross Revenue" means the gross selling price (whether collected or not) for all final sales made in connection with Concessionaire's business operations under this Agreement, including the full amount of all orders for advertising accepted by Concessionaire elsewhere, but to be filled or performed in or on the Display Areas, excluding: (i) any and all retail sales taxes, excise taxes, transaction privilege taxes or related direct taxes collected by Concessionaire in the course of making such sales; and (ii) any fees or costs charged or deducted by third party credit card issuers, including but not limited to MasterCard and Visa.

3.1.3 "MAG Rent" means the minimum annual guaranteed rent, which shall be:

(i) for Year 1, FOUR-THOUSAND FIVE-HUNDRED DOLLARS ($4,500.00); and

(ii) for all other Agreement Years, the greater of: (a) the MAG Rent payable for the immediately preceding Agreement Year, or (b) EIGHT-FIVE PERCENT (85%) of the Percentage Rent payable by Concessionaire for the immediately preceding Agreement Year.

3.1.4 "Monthly Installment of MAG Rent" means, as applicable: (i) for Year 1, one-twelfth (1/12) of MAG Rent, i.e., THREE-HUNDRED SEVENTY-FIVE DOLLARS ($375.00), and (ii) for all subsequent Agreement Years, one-twelfth (1/12) of the MAG Rent for such Agreement Year.

3.1.5 "Percentage Rent" means an amount equal to THIRTY PERCENT (30%) of Gross Revenue attributable to the applicable period, i.e., Agreement Year, or month.

3.2 Rent. For and in consideration of the privilege and authorization herein granted, Concessionaire shall pay PMGAA for use and occupancy of the Display Areas as set forth in Section 3.3 below, the greater of: (i) MAG Rent, or (ii) Percentage Rent.

3.3 Payments.

3.3.1 *MAG Rent.* Concessionaire shall remit its Monthly Installment of MAG Rent to PMGAA, in advance and without any prior demand therefor and without any abatement, deductions or set-offs whatsoever. Such payment shall be due and payable no later than the FIRST (1st) day of each month in which said payment is due (the "MAG Rent Due Date"), plus applicable taxes. MAG Rent payments received TEN (10) or more days after the MAG Rent Due Date shall be subject to finance charges and/or late fees, as provided in SECTION 3.5 herein.

3.3.2 *Percentage Rent.*

a. *Agreement Years.* For all Agreement Years, in addition to the Monthly Installment of MAG Rent, Concessionaire shall pay monthly to PMGAA, on or before the TWENTIETH (20th) day following the Percentage Rent Due Date, a sum equal to the amount in which Percentage Rent for the preceding month

exceeds the Monthly Installment of MAG Rent for the preceding month. Such payments, if any, shall include applicable taxes, as required by SECTION 3.6 herein.

b. *Monthly Reports*. Promptly following the end of each calendar month and in no event later than the Percentage Rent Due Date, Concessionaire shall submit to PMGAA a report detailing the Gross Revenues from its operation at, on, or from the Display Areas attributable to the preceding month, in addition to agreement specifics including but not limited to advertiser names, effective and expiration dates, and gross monthly revenue.

c. *No Waiver*. No payment to or receipt by PMGAA of a lesser amount than that which is due and payable under the provisions of this Agreement at the time of such payment shall be deemed to be other than a payment on account of the earliest payment due, nor shall any endorsement or statement on any check or payment prejudice in any way PMGAA's right to recover the balance of such payment or pursue any other remedy provided in this Agreement or by law.

3.4 Annual Reports. Within THIRTY (30) days of the end of each Agreement Year, Concessionaire shall provide PMGAA an accounting of its MAG Rent and Percentage Rent payments to PMGAA, including Concessionaire's Gross Revenue attributable to the Agreement Year (as defined in SECTION 3.1.1). If Concessionaire's required payments to PMGAA under this Agreement differ from amounts Concessionaire has actually paid, an adjustment shall be made as follows: (i) If Concessionaire shall have paid to PMGAA an amount greater than Concessionaire is required to pay for such previous Agreement Year, Concessionaire shall be entitled to a refund or credit against Concessionaire's next payment for the amount of such overpayment, at Concessionaire's discretion; or (ii) if Concessionaire shall have paid an amount less than the amounts required to be paid during the Agreement Year, then Concessionaire shall immediately pay such difference to PMGAA.

3.5 Finance and Late Charges.

3.5.1 If PMGAA shall receive payment for any rent or other fee from Concessionaire TEN (10) or more days after the applicable due date, Concessionaire shall pay interest on the unpaid installment at the rate of EIGHTEEN PERCENT (18%) per annum (a "Finance Charge"), from such due date and continuing until payment is received by PMGAA in full.

3.5.2 In the event any payment is received by PMGAA more than TEN (10) days after the due date, a late penalty of TEN PERCENT (10%) of the amount of such delinquent payment (a "Late Fee") shall be due and payable in addition thereto.

3.6 Taxes. In the event any governmental authority shall impose a tax or imposition based upon any payments or any other sums paid or owing hereunder or the receipt of such payments by PMGAA, then, Concessionaire shall pay such amounts to PMGAA at the same time and in addition to payments hereunder, which amounts may include, but are not limited to, any or all rental, transaction privilege, sales, excise or other similar tax except income taxes. Concessionaire's obligation to pay such amounts together with any interest thereon and/or penalties therefor, shall survive the termination of this Agreement.

3.7 Payments – Rentals and Fees.

3.7.1 All payments of rentals, fees, and charges specified in SECTIONS 3.1 through 3.6 herein shall be tendered in lawful currency of the United States, either by check or electronic transfer, and shall be free from all claims or setoffs of any kind against PMGAA.

3.7.2 Except as otherwise provided herein, all payments and reports required by this SECTION 3 shall be remitted to the following address by the due date(s) specified herein:

Phoenix-Mesa Gateway Airport Authority
Attn: Department of Finance, Accounts Receivable
5835 S Sossaman Rd
Mesa, AZ 85212

or such other address specified in writing by PMGAA to Concessionaire.

3.8 Survival. Concessionaire's obligation to pay all amounts herein stated, together with any interest thereon and/or penalties therefor, shall survive the termination of this Agreement.

4. RECORDS AND AUDITING

4.1 Concessionaire Records. With respect to its activities in the Display Areas and on the Airport, Concessionaire shall keep true and accurate records, books, and data which shall show all sales made and services performed for cash or credit or otherwise, whether paid or not. Said records, books, and data shall be kept and maintained at Concessionaire's business office in the local Phoenix, Arizona metropolitan area, or upon written PMGAA request, shall be made available for audit at the Airport, within TEN (10) business days after such request. PMGAA and its authorized representatives shall have the right at reasonable times and during business hours to inspect and examine records, books, and other data as required to verify sales and billings as described in this Agreement.

4.2 PMGAA Audit Authority. In accordance with SECTION 4.1, PMGAA or its authorized representatives shall have the right to audit Concessionaire's records relating to billings, monthly rental payments reported and paid hereunder, and any other activity by Concessionaire on the Airport during the TWELVE (12) consecutive month period preceding the date of such audit. If PMGAA finds or determines that a discrepancy exists for the period of the audit, Concessionaire shall promptly pay the cost and expense of PMGAA's audit. For purposes of this Agreement, a "discrepancy" shall mean one where audited billings exceed reported billings by TWO PERCENT (2%) or more. The amount of any such deficiency established by such audit shall be conclusive and binding upon the Parties and shall be paid by Concessionaire no later than TEN (10) days from the billing date.

5. CONDITION OF DISPLAY AREAS; INSTALLATIONS

5.1 Concessionaire's Acceptance. Concessionaire agrees to accept the Display Areas in an "as is" condition and accepts financial responsibility for all improvements specified in EXHIBIT A herein, and as required to make the Display Areas suitable for Concessionaire's business operations.

5.2 Authorization. Concessionaire shall make no improvements or alterations to the Display Areas or any adjoining areas during the Term of this Agreement without prior notice to and written permission of PMGAA.

5.3 Requirements – Initial Installations.

5.3.1 Beginning on the Effective Date, Concessionaire shall undertake to design and install all improvements, fixtures, furniture, and related items (collectively, the "Initial Installations") in accordance with the approved Displays listed in EXHIBIT A. Installation plans for the Initial Installations and any material changes thereto shall be submitted to and approved in writing by PMGAA prior to purchase and installation.

5.3.2 Schedules pertinent to the delivery and installation of materials, installation activities, and other related work events shall be coordinated in advance with PMGAA no less than FIVE (5) business days prior to their planned action, whenever possible. Concessionaire shall be responsible for ensuring that ongoing commercial airline and other business activities taking place within the Terminal during construction and installation of Concessionaire's Initial Installations are not materially disrupted at any time.

5.3.3 Concessionaire shall complete installation of the Initial Installations to the Display Areas as soon as possible, but no later than October 15, 2021 (14 days after the Effective Date).

6. MAINTENANCE, REPAIRS, AND SERVICES

6.1 Maintenance. Concessionaire shall, at its sole expense, maintain the Display Areas, including all furnishings, equipment, and Displays therein, in good and safe repair and in a neat, clean, and orderly condition throughout the Term of this Agreement. All signage and notices posted within the Display Areas shall be professionally prepared and affixed in a safe, aesthetically pleasing manner, such that they complement the concession décor. No paper signs shall be taped to walls or structures anywhere within the Display Areas.

6.2 Repairs. Any damage caused to the Display Areas or any PMGAA property by any act, omission, or negligence of Concessionaire, its employees, invitees, suppliers, or furnishers of service shall be repaired and restored to the condition existing prior to damage by Concessionaire at Concessionaire's sole expense in accordance with plans and specifications provided by Concessionaire to and approved by PMGAA. Should PMGAA find it necessary to make such repairs itself, Concessionaire shall pay PMGAA, as additional fees hereunder, the expenses of all repairs thereby incurred.

6.3 Services. Concessionaire agrees to provide, at its own expense, such janitorial and cleaning services and supplies as may be necessary or required in the operation and maintenance of the Display Areas. In the event PMGAA determines, in its sole, reasonable discretion, that Concessionaire's janitorial and cleaning program is not acceptable or sufficient, then, PMGAA may, after reasonable notice to Concessionaire, seek to provide such services by other means. Concessionaire agrees to reimburse PMGAA no later than TWENTY (20) days following written demand by PMGAA for any expenses incurred by PMGAA due to conditions at the Display Areas.

7. CONCESSIONAIRE'S COMPLIANCE

7.1 Regulatory Compliance and Certification. Concessionaire, its agents, employees, invitees, subcontractors, and independent contractors shall comply with all directions, rules, regulations, and operating procedures of PMGAA in effect or hereinafter promulgated, and shall observe and obey all ordinances of the City, as well as all federal and state statutes and regulations governing use of the Display Areas and Airport and Concessionaire's business activities thereon.

7.2 Operating Permits. Concessionaire shall furnish to PMGAA, prior to using the Display Areas or conducting any business or activities at, on or within the Airport, copies of all operating permits required by the City, or any other government entity, if applicable.

7.3 Operating and Service Standards.

7.3.1 *Professional Management.* Concessionaire shall designate a local representative experienced in management and supervision who has sufficient authority and responsibility to ensure proper operation of the concession, to render decisions and to take all necessary action(s) in connection with this Agreement. Such a person (or his or her authorized and designated representative) shall be available whenever the concession is in operation, and be contactable at all other times should emergencies arise.

7.3.2 *Personnel.* Concessionaire shall:

a. Maintain a sufficient number of trained personnel to ensure Displays and Display Areas meet the required standards and Concessionaire's obligations as set forth in this Agreement. All personnel of Concessionaire, while on or about the Airport, shall be polite, clean, and present a professional appearance at all times.

b. Ensure all Concessionaire employees (whether full-time, part-time, or contract) are at all times competent, experienced, and properly licensed to perform their duties, as and if required by applicable federal, state, and local laws, and obey all traffic laws and regulations. Said employees shall at all times be under the direction of Concessionaire, who will be solely responsible for their conduct and performance, and shall conduct themselves with courtesy and dignity with the public interest of primary importance.

c. Promptly respond to and resolve any issue with any employee whose conduct PMGAA or its Executive Director feels is detrimental to the best interests of the Airport and PMGAA.

d. Not, during the Term of this Agreement, hire or employ, on a full-time, part-time, or contract basis, any person or persons employed by PMGAA.

7.3.3 *Public Service.* Concessionaire shall ensure that its business operations at, on, and about the Airport are conducted in a professional, first-class manner, and that all facilities, equipment, services, and standards of operation are at least equal to the highest quality of service rendered by other companies of a like nature at other modern airport terminal facilities. The general public shall be given the highest consideration at all times in matters affecting the operation of this concession, and Concessionaire shall emphasize the tenets of "exceptional customer service," "quality products," and "value" in both its products offered for sale and during interaction with its customers.

7.3.4 *Hours of Operation.* Concessionaire shall ensure all Displays are available and stocked for customer use 24-hours daily and are kept in good condition at all times.

7.3.5 *Nondiscrimination.* In furnishing services to the public, Concessionaire shall not discriminate against any person or class of persons by reason of race, color, creed, or national origin, and Concessionaire shall otherwise provide such services on a fair, equal, and not unjustly discriminatory basis to all users thereof.

7.3.6 *Complaints by Public.* In the event Concessionaire receives (or PMGAA receives and forwards to Concessionaire) any written complaint concerning Concessionaire's operation of the concession, Concessionaire shall promptly respond to such complaint in writing within TEN (10) business days of its receipt and make a good-faith attempt to explain, resolve, or rectify the cause of such complaint. Repeated complaints by the public concerning Concessionaire's services may be grounds for termination of this Agreement.

7.4 Surrender of Occupancy.

7.4.1 When this Agreement expires or is otherwise terminated in whole or in part as provided elsewhere herein, Concessionaire shall surrender the Display Areas, the Displays, and fixed improvements and operating facilities therein broom-clean and in a state of good repair, with the exception of reasonable wear and tear and damage by loss or casualty not covered by insurance which Concessionaire is required to maintain pursuant to this Agreement and not otherwise attributable to Concessionaire's fault or negligence.

7.4.2 Concessionaire shall be deemed to have abandoned to PMGAA any personal property and trade fixtures that it has failed to remove from the Display Areas within FIFTEEN (15) days after the end of the Term of this Agreement, or the effective date of termination thereof, unless PMGAA grants additional time for this purpose in writing. During this period, Concessionaire shall remain responsible for monthly fee(s) and other payment(s) to PMGAA until such time as the Display Areas are fully available to PMGAA for maintenance, renovation, or re-letting to another concessionaire. After the expiration of the aforementioned FIFTEEN (15) day period or any extension thereof granted by PMGAA, PMGAA shall have the right to remove the property of Concessionaire and restore the Display Areas to a satisfactory condition and hold Concessionaire liable for all costs incident thereto. In the event it is necessary for PMGAA to remove such property, PMGAA shall not sustain or be charged with any liability by reason of the removal or custodial care of same.

8. AIRPORT SECURITY PLAN

8.1 PMGAA maintains an approved Airport Security Plan ("Security Plan") pursuant to 49 CFR Parts 1540 and 1542, and 14 CFR Part 139. Concessionaire shall at all times comply with PMGAA Operations Department security directives, security bulletins, or verbal notifications existing now or in the future.

8.1.1 Concessionaire is responsible for maintaining security practices in connection with its operations that meet the security standards set forth by PMGAA.

8.1.2 Concessionaire shall immediately correct physical or procedural deficiencies which are contrary to PMGAA, security directives, security bulletins, or verbal notifications existing now or in the future.

8.1.3 Concessionaire shall, to the fullest extent permitted by law, indemnify, defend and hold PMGAA harmless for, from, and against any security violation committed by any agents, employees, invitees, subcontractors, sub-lessees, or independent contractors of Concessionaire.

8.1.4 Concessionaire shall conduct and document all self-audits and self-inspections as required by TSA or PMGAA and make such audits available for inspection.

8.1.5 Concessionaire shall designate a primary security coordinator to receive security related briefings, bulletins, and sensitive security information.

8.1.6 PMGAA reserves the right to modify the Security Plan from time to time, as necessary or as directed by TSA. PMGAA shall notify the Concessionaire security coordinator regarding modifications that effect Concessionaire.

9. TAXES, LICENSES, AND PERMITS

Concessionaire shall pay all taxes and assessments that may be levied or charged upon its property, equipment, and activity hereunder, and shall secure and comply with all licenses and permits required by PMGAA or any other governmental authority exercising jurisdiction over its business or activities. Concessionaire shall also pay any taxes or assessments levied upon PMGAA as a result of Concessionaire conducting its business under the authority of this Agreement.

10. INSURANCE AND INDEMNIFICATION

10.1 Insurance Coverage Required. Concessionaire shall at all times and prior to the Effective Date at its sole expense, maintain in effect the insurance coverage set forth below, deliver a certificate or insurance for each policy to PMGAA and continue to provide such certificate(s) throughout the Term:

10.1.1 *Comprehensive General Liability Insurance.* In an amount not less than ONE-MILLION DOLLARS ($1,000,000) per occurrence and TWO-MILLION DOLLARS ($2,000,000) aggregate, covering third party bodily injury and property damage, and including coverage for "premises/operations," "products and completed operations," "professional," and "blanket contractual liabilities".

10.1.2 *Commercial Automobile Liability Insurance.* In an amount not less than ONE-MILLION DOLLARS ($1,000,000) per occurrence, covering all owned, non-owned, and hire vehicles operated on the Airport that are assigned to or used in the performance of Concessionaire's business activities.

10.1.3 *Professional Liability Insurance.* In an amount not less than ONE-MILLION DOLLARS ($1,000,000) per occurrence, covering damages caused by error, omission, or negligent acts related to the professional services to be provided under this Agreement.

10.1.4 *Workers' Compensation Insurance.* As required by law, as well as Employer's Liability insurance in the amount of ONE-MILLION DOLLARS ($1,000,000) covering work-related injuries to employees and others permitted to operate or otherwise conduct business at the Airport on Concessionaire's behalf.

10.2 Insurance Form. Each insurance policy obtained pursuant to this SECTION 10, except for Worker' Compensation and Employer's Liability policies, shall name PMGAA as a certificate holder or an additional named insured. Each insurance policy shall: (i) contain a provision that written notice of cancellation or modification thereof shall be given to PMGAA not less than THIRTY (30) days before such cancellation or modification takes effect (TEN (10) days in the case of nonpayment of premium); and (ii) contain a waiver of subrogation in favor of PMGAA. Concessionaire shall not permit any insurance policy to be canceled or modified without PMGAA's written consent unless equivalent replacement policies are issued with no lapse in coverage. All policies shall be obtained from insurance companies licensed to do business in the State of Arizona and possessing a rating of at least A – VIII or higher from the A.M. Best Company, or an equivalent rating approved by PMGAA.

10.3 Higher Insurance Limits. If Concessionaire maintains higher limits than the minimums shown above, PMGAA shall be entitled to coverage for the higher limits maintained by Concessionaire. Any available insurance proceeds in excess of the specified minimum limits of insurance and coverage shall be available to PMGAA.

10.4 Waiver of Subrogation. Concessionaire waives any right to subrogation. Concessionaire shall obtain an endorsement necessary to affect this waiver of subrogation from the insurer for all lines of coverage required by this Agreement, except *Workers Compensation* and *Professional Liability,* for claims arising out of the Concessionaire's work or service.

10.5 Primary Coverage. For all claims related to this Agreement, all of Concessionaire's insurance policies will be primary and non-contributory. Any insurance or self-insurance maintained by PMGAA, its officers, officials, employees, or volunteers will be in excess of Concessionaire's insurance and will not contribute with it.

10.6 Deductibles and Self-Insured Retentions. Any deductibles or self-insured retentions must be declared to and approved by PMGAA. PMGAA may require Concessionaire to provide proof of ability to pay losses and related investigations, claim administration, and defense expenses within the retention.

10.7 Subcontractors. Concessionaire shall require and verify that all subcontractors maintain insurance meeting all the requirements stated herein, and Concessionaire shall ensure that PMGAA is an additional insured on insurance required from subcontractors.

10.8 Special Risks or Circumstances. PMGAA reserves the right to modify these requirements, including limits, based on the nature of the risk, scope of services, prior experience, insurer, coverage, or other special circumstances.

11. ASSIGNMENT

11.1 Consent. Concessionaire shall not assign, transfer or encumber this Agreement in any manner, or any part hereof, or interest herein, or sublicense any of the Display Areas hereunder, except with the prior written permission of PMGAA and subject to whatever reasonable limitations and conditions may be required by PMGAA. Any other transfer, assignment, or sublicense shall be void and shall confer no rights upon any third person or party, and such may be deemed by PMGAA, in its sole and absolute discretion, as a breach of this Agreement, rendering it null and void. No authorized assignment or sublicense shall relieve Concessionaire of any obligation under this Agreement unless otherwise agreed in advance, in writing by PMGAA. Notwithstanding the foregoing, this SECTION 11 shall not be interpreted to preclude the assignment of this Agreement to a parent, subsidiary, or merged company, if such part, subsidiary or merged company assumes all rights and obligations of this Agreement.

Written notice of such assumption shall be provided to PMGAA by the parent, subsidiary or merged company not less than THIRTY (30) days prior to the effective date of such assignment.

11.2 Transfer Defined. For the purposes of this Agreement, a "transfer" shall be deemed to include the following: (i) if Concessionaire is a corporation, partnership, limited liability company, or other legal entity, the transfer of any ownership interest in such entity resulting in a change in the present control of such entity by the person or persons owning a majority of the ownership interest thereof as of the date of this Agreement; provided, however, if Concessionaire is a corporation whose stock is traded on a nationally recognized stock exchange, the transfer of Concessionaire's stock shall not constitute a transfer requiring PMGAA's consent, or (ii) the sale of TWENTY-FIVE PERCENT (25%) or more in value of the assets of Concessionaire.

12. DEFAULT; TERMINATION

12.1 Events of Default. The occurrence of any one or more of the following events shall constitute a default and breach of this Agreement ("Event of Default") by Concessionaire:

12.1.1 If Concessionaire shall fail to pay any fee or any other amount due from Concessionaire hereunder, provided that Concessionaire does not cure or initiate demonstrable corrective action for such failure within TEN (10) business days after delivery by PMGAA of a written notice of such failure.

12.1.2 If Concessionaire shall neglect or fail to perform, keep or observe any other terms, covenants or conditions herein contained and if such neglect or failure shall continue for a period of THIRTY (30) calendar days after delivery by PMGAA of a written notice of such default; provided, however, if a cure of the default reasonably requires more than THIRTY (30) calendar days to complete, then the time to cure shall be extended so long as the cure is being diligently pursued.

12.1.3 The taking by a court of competent jurisdiction of Concessionaire and its assets pursuant to proceedings under the provisions of any Federal or State reorganization or bankruptcy code or act.

12.1.4 The occurrence of any act which deprives the Concessionaire of the rights, licenses, permits and authorizations necessary for the proper and lawful conduct of the Concessionaire's business operations at, on, about or from the Airport.

12.1.5 If Concessionaire shall abandon all or any part of the Display Areas or shall discontinue the conduct of its operations in all or any part of the Display for a period of THREE (3) consecutive days.

12.1.6 The filing of any mechanic's, materialman's or other lien or any kind against the Airport property because of any act or omission of Concessionaire which lien is not discharged, by bonding or otherwise, within THIRTY (30) calendar days of receipt of actual notice thereof by Concessionaire.

12.1.7 Concessionaire's receipt of THREE (3) written notices of default for violations of the Security Plan or PMGAA's published *Rules and Regulations* from PMGAA within a SIX (6) consecutive calendar month period.

12.1.8 A transfer or assignment occurs without PMGAA's prior written approval.

12.1.9 Concessionaire conducts its operations in such a manner as to threaten public safety, as determined by PMGAA in conformity with the laws and regulations of the State of Arizona and PMGAA.

12.1.10 PMGAA determines that Concessionaire willfully falsified any of its records or figures so as to deprive PMGAA of any of its rights under the terms of this Agreement.

12.2 PMGAA's Remedies. Upon the occurrence of an Event of Default under this Agreement, PMGAA may, without prejudice to any other rights and remedies available to PMGAA at law, in equity or by statute, exercise one or more of the following remedies, all of which shall be construed and held to be cumulative and non-exclusive:

12.2.1 Terminate this Agreement and take possession of the Display Areas and remove any Displays, trade fixtures, or other equipment; or

12.2.2 Without terminating this Agreement, take possession of the Display Areas and remove any Displays, trade fixtures, or other equipment; or

12.2.3 With or without terminating this Agreement, PMGAA may authorize another party to use the Display Areas or any portion thereof.

12.3 PMGAA's Current Damages. PMGAA is authorized to make such repairs, refurbishments or improvements to the Display Areas as may be necessary for the purpose of attempting to re-license the space, and the costs and expenses incurred in respect of such repairs, redecorating, refurbishments and improvements shall be paid by Concessionaire to PMGAA within FIVE (5) business days after receipt of PMGAA's statement. If PMGAA exercises any of the remedies set forth in SECTION 12.2, PMGAA shall be entitled to recover from Concessionaire all damages incurred by PMGAA by reason of the Event of Default, which shall include, without limitation, (i) the equivalent of the amount of the fees and all other payments which would be payable under this Agreement by Concessionaire for the remainder of the Term as if this Agreement were still in effect, less (ii) the net proceeds of any re-licensing by PMGAA after deducting all of PMGAA's expenses in connection with such re-licensing, which shall include, without limitation, repairs, redecorating, refurbishments or improvements to the locations, brokerage commissions, attorneys' fees, and legal expenses. Concessionaire shall pay such current damages to PMGAA, in the amount set forth in the preceding sentence (hereinafter called the "Deficiency"), in monthly installments on the days on which the fees would have been payable under this Agreement as if this Agreement were still in effect.

12.4 Content of Default Notice. Any default notice tendered to Concessionaire hereunder shall be deemed to be sufficient if it is reasonably calculated to put Concessionaire on inquiry as to the nature and extent of such default.

12.5 Concessionaire's Right of Cancellation. Except as otherwise provided herein, and subject to PMGAA's right to substitute Comparable Areas as set forth in SECTION 1.5.2, Concessionaire shall have the right to terminate this Agreement in its entirety upon THIRTY (30) days advance written notice to PMGAA if one or more of the following events of default are committed by PMGAA:

12.5.1 The issuance by any court of competent jurisdiction of any injunction preventing or restraining the use of the Airport in such a manner as to substantially restrict Concessionaire from conducting its business activities at, on, and within the Terminal, which injunction is not caused by any act or omission of Concessionaire and such injunction remains in force for at least SIXTY (60) consecutive days.

12.5.2 The assumption by the United States Government and the authorized agencies thereof, or any other governmental agency, of the operation, control or use of Airport facilities or any substantial part of parts thereof in such a manner as to substantially restrict the conduct of Concessionaire's business thereto for a period of THIRTY (30) days or more.

12.5.3 The Terminal sustains major damage or destruction by fire or other casualty, when such damage or destruction shall substantially interfere with Concessionaire's business therein and PMGAA is unable to complete required repairs and/or restoration of the Terminal within SIX (6) months following the date of such damage or destruction.

12.5.4 A breach by PMGAA of any of the terms and covenants or conditions within this Agreement. In the event of such a breach, Concessionaire shall have available all rights and remedies provided at law or in equity, subject to the terms and conditions of this Agreement; provided, however, Concessionaire may not exercise any such right or remedy unless Concessionaire has notified PMGAA by written notice of such alleged default, and PMGAA has not cured such default within a THIRTY (30) day period subsequent to receipt of such notice or, in the event such alleged default is of such a nature that it cannot be reasonably cured within such THIRTY (30) day period, PMGAA has failed to cure such alleged default with all due diligence. Notwithstanding anything to the contrary in this Agreement, in no event shall Concessionaire be entitled to terminate this Agreement or abate or offset any installment of rent or any other payments to be made by Concessionaire hereunder.

12.6 This Agreement may be terminated at any time by mutual written consent or by PMGAA – with or without cause – provided the terminating party gives NINETY (90) calendar days' advance written notice to the other party. PMGAA may terminate this Agreement, in whole or in part, for PMGAA's convenience and with NINETY (90) days' written notice.

13. NONWAIVER

PMGAA's right to terminate this Agreement shall be absolute. Any election by PMGAA to not enforce any provision of this Agreement, or any failure by PMGAA to exercise any of the remedies allowed PMGAA under this Agreement, shall not operate as a waiver by PMGAA of its right.

14. APPLICABLE LAW

The laws of the State of Arizona, including its conflicts of law provisions, shall govern the matters set forth in this Agreement. Venue of any action brought under this Agreement shall, at the option of PMGAA, lie in Maricopa County, Arizona.

15. RULES AND REGULATIONS

Concessionaire shall at all times comply with all Federal, State, and local laws, ordinances, rules, and regulations which are applicable to its operations, the Display Areas, or the Displays itself (including but not limited to the Americans with Disabilities Act), or the operation, management, maintenance, or administration of the Airport, including all laws, ordinances, rules and regulations adopted after the Effective Date. Concessionaire shall at all times comply with the Airport Rules and Regulations, as applicable and as the same may be amended from time to time. The Airport Rules and Regulations document can be download on our website, www.gatewayairport.com, on the Policies, Documents and Forms page. Concessionaire acknowledges and agrees that PMGAA may amend the Airport Rules and Regulations at any time in PMGAA's sole and absolute discretion. Concessionaire also shall display to PMGAA any permits, licenses, or other evidence of compliance with laws upon request.

16. CORPORATE AUTHORIZATION

In executing this Agreement, Concessionaire represents and warrants to PMGAA that Concessionaire has obtained and been granted the full right, power, and authority to enter into this Agreement.

17. NOTICES

17.1 Notices required under this Agreement shall be in writing and delivered personally or by registered or certified mail, postage prepaid, addressed as follows:

TO PMGAA. Phoenix-Mesa Gateway Airport Authority
Attention: Marketing Analyst
5835 S Sossaman Rd
Mesa, AZ 85212-6014

TO CONCESSIONAIRE. Certified Folder Display Service, Inc.
Attention: Bill Deering
1120 Joshua Wy
Vista, CA 92081
1-800-799-73763 x 103
billd@certifiedfolder.com

17.2 Notice by certified or registered mail in the manner described above shall be deemed effective the day after its deposit in the mail.

18. ACDBE REQUIREMENTS

This Agreement is subject to the requirements of the U.S. Department of Transportation's regulations, 49 CFR Part 23. The Concessionaire or Contractor agrees that it will not discriminate against any business owner because of the owner's race, color, national origin, or sex in connection with the award or performance of any concession agreement, management contract, or subcontract, purchase, or lease agreement, or other agreement covered by 49 CFR Part 23.

The Concessionaire or contractor agrees to include the above statement in any subsequent concession agreement or contract covered by 49 CFR Part 23, that it enters and cause those businesses to similarly include the statement in further agreements.

18.1 PMGAA's Airport Concession Disadvantaged Business Enterprise (ACDBE) Program is race-neutral. PMGAA encourages the use of ACDBEs and other small businesses in the performance of this concession opportunity. In order to be counted as an ACDBE, a small business must be certified as an ACDBE at time proposals are due by a certifying agency within the Arizona Unified Certification Program (UCP), or another certifying agency, in accordance with 49 CFR Part 23. Concessionaire shall make outreach efforts to obtain ACDBE and other small business participation in the performance of this Agreement.

18.1.1 Concessionaire agrees to employ outreach efforts to carry out this policy through award of subcontracts to small businesses and disadvantaged business enterprises to the fullest extent consistent with the sufficient performance of PMGAA's contract, and/or the utilization of ACDBE suppliers where feasible.

18.1.2 PMGAA shall not, nor shall it require its Concessionaires to, award contracts or subcontracts to or to make purchases of materials or equipment from small businesses and/or ACDBEs who are not qualified.

18.2 Record Requirements. Concessionaire is required to track and report all ACDBE and/or small business participation that occurs as a result of a contract, procurements, purchase orders, sublease, joint venture, goods/services, or other arrangements involving sub-tier participation.

18.2.1 PMGAA reserves the right to validate the information submitted by Concessionaire with the ACDBE firm listed and/or other certifying entities or licensing agents as part of the verification process.

18.2.2 Concessionaire shall keep sufficient records to track the requirements of PMGAA's ACDBE Program and 49 CFR Part 23 requirements, including, but not limited to subcontract/supplier awards, specifically awards to ACDBE firms; (ii) specific efforts to identify and award such contracts to ACDBEs; and (iii)

submit when requested, copies of executed contracts to establish actual ACDBE participation and ensure contract compliance with FAA requirements.

18.2.3 Concessionaire shall submit to PMGAA periodic reports of subcontract and/or supplier awards to ACDBE firms in such form and manner and at such times as PMGAA shall prescribe. Concessionaire shall provide access to books, records, and accounts to authorized officials of PMGAA, and Federal agencies for the purpose of verifying ACDBE participation and outreach efforts to carry out the ACDBE Policy and Program. See ATTACHMENT 2 for current report requirement.

18.2.4 Prior to any work commencing by Concessionaire's ACDBE subcontractors/suppliers, Concessionaire shall provide PMGAA copies of all executed contracts with such ACDBEs for review of contract compliance with PMGAA's ACDBE Program and Federal Requirements.

18.2.5 Audit determination(s) may be considered and have a bearing in the evaluation of Concessionaire's outreach efforts on future contracts with PMGAA.

18.3 Outreach Efforts. During the performance of this Agreement, Concessionaire must demonstrate it has performed outreach efforts to solicit participation from interested and qualified ACDBEs and other small businesses upon PMGAA's written request. This requires Concessionaire to document the identification of potential business opportunities for ACDBEs, describe what efforts were undertaken to solicit for ACDBE involvement, results of negotiations with potential ACDBEs, and record the communications of Concessionaire's selection or non-selection of ACDBEs.

The actions taken to meet outreach efforts must be substantiated by written documentation and provided to PMGAA. A declaration that outreach efforts were made will not be sufficient to meet the burden of proof required. PMGAA's decision as to whether or not outreach efforts have been made is final and conclusive.

Failure of Concessionaire to demonstrate such outreach efforts constitutes a material breach of this Agreement subject to termination by PMGAA.

18.4 Approved ACDBE Program. PMGAA's ACDBE Program dated October 2018, as amended from time to time, and approved by the FAA, all its terms and conditions is hereby incorporated into and made part of this Agreement by reference.

The approved ACDBE Program can be found on the PMGAA website, www.gatewayairport.com.

PMGAA reserves the right to revise the Program as required.

18.5 Amendments. PMGAA's ACDBE program shall also apply to any amendments to this Agreement that require work beyond the scope of services originally required to accomplish the project. Concessionaire shall make outreach efforts to obtain ACDBE participation for additional scope(s) of services.

18.6 Agreement Renewal and/or Extension. Prior to any Agreement renewal and/or extension, PMGAA shall have the right to review and/or revise the ACDBE requirements herein, including, but not limited to requiring an ACDBE goal if appropriate.

18.7 Enforcement. This Agreement and all subsequent subcontracts entered into as a result of this Agreement, are subject to the requirements, provisions, and enforcement actions of 49 CFR Part 26, Subpart F, *Compliance and Enforcement*, § 26.101 and 26.105 through 26.109.

The requirements of this SECTION 18 apply to Non-ACDBE prime Concessionaires and ACDBE prime Concessionaires. Failure to comply with the requirements of this SECTION 18 constitutes a breach of this Agreement. Such breach may lead to the termination or cancellation of the Agreement

19. TITLE VI

19.1 Civil Rights Act of 1964, Title VI – General. Concessionaire agrees to comply with pertinent statues, Executive Orders, and such rules as are promulgated to ensure that no person shall, on the grounds of race, creed, color, or national origin, sex, age, or disability be excluded from participating in any activity conducted with or benefiting from Federal assistance. This provision binds the Concessionaire and subcontractors from the bid solicitation period through the completion of this Agreement. This provision is in addition to that required by Title VI of the Civil Rights Act of 1964.

Concessionaire agrees to include the above statement in any subsequent concession agreement or contract covered by 49 CFR part 23, that it enters and cause those businesses to similarly include the statements in further agreements.

19.2 Civil Rights Act of 1964, Title VI – Assurances. During the performance of this Agreement, Concessionaire, for itself, its assignees and successors in interest agrees as follows:

19.2.1 *Compliance with Regulations*. Concessionaire shall comply with the Title VI List of Pertinent Nondiscrimination Acts and Authorities, as they may be amended from time to time, which are herein incorporated by reference and made a part of this Agreement.

19.2.2 *Nondiscrimination*. Concessionaire, with regard to the work performed by it during the Term of this Agreement, shall not discriminate on the grounds of race, color, or national origin in the selection and retention of subcontractors, including procurements of materials and leases of equipment. Concessionaire will not participate directly or indirectly in the discrimination prohibited by the Nondiscrimination Acts and Authorities, including employment practices when the Agreement covers any activity, project, or program set forth in Appendix B of 49 CFR Part 21.

19.2.3 *Solicitations for Subcontracts, including Procurements of Materials and Equipment*. In all solicitations, either by competitive bidding, or negotiation made by Concessionaire for work to be performed under a subcontract, including procurements of materials, or leases of equipment, each potential subcontractor or supplier will be notified by the Concessionaire of Concessionaire's obligations under this Agreement and the Non-Discrimination Acts and Authorities on the grounds of race, color, or national origin.

19.2.4 *Information and Reports*. Concessionaire shall provide all information and reports required by the Acts, the Regulations, and directives issued pursuant thereto and shall permit access to its books, records, accounts, other sources of information, and its facilities as may be determined by PMGAA or the FAA to be pertinent to ascertain compliance with such Nondiscrimination Acts and Authorities and instructions. Where any information required of Concessionaire is in the exclusive possession of another who fails or refuses to furnish the information, Concessionaire will so certify to PMGAA or the FAA as appropriate and will set forth what efforts it has made to obtain the information.

19.2.5 *Sanctions for Noncompliance*. In the event of a Concessionaire's noncompliance with the Nondiscrimination provisions of this Agreement, PMGAA will impose such sanctions as it or the FAA may determine to be appropriate, including, but not limited to:

a. Withholding of payments to the Concessionaire under this Agreement until Concessionaire complies, and/or;

b. Cancellation, termination, or suspension of this Agreement, in whole or in part.

19.2.6 *Incorporation of Provisions*. Concessionaire will include the provisions of SECTIONS 19.2.1 through 19.2.5 of this SECTION 19.2 in every subcontract, including procurements of materials and leases of equipment, unless exempt by the Acts, the Regulations and directives issued pursuant thereto. Concessionaire will take action with respect to any subcontract or procurement as PMGAA or the FAA may direct as a means of enforcing such provisions including sanctions for noncompliance. Provided, that if Concessionaire becomes involved in, or is threatened with litigation by a subcontractor, or supplier because of such direction, Concessionaire may request PMGAA to enter into any litigation to protect the interests of PMGAA. In addition, Concessionaire may request the United States to enter into the litigation to protect the interests of the United States.

19.3 Civil Rights – Title VI List of Pertinent Nondiscrimination Acts and Authorities. During the performance of this Agreement, Concessionaire, for itself, its assignees, and successors in interest (hereinafter referred to as the "Concessionaire" for purposes of this SECTION 19.3) agrees to comply with the following non-discrimination statutes and authorities; including but not limited to:

19.3.1 Title VI of the Civil Rights Act of 1964 (42 U.S.C. § 2000d *et seq*., 78 stat. 252), (prohibits discrimination on the basis of race, color, national origin);

19.3.2 49 CFR part 21 (Non-discrimination In Federally-Assisted Programs of The Department of Transportation—Effectuation of Title VI of The Civil Rights Act of 1964);

19.3.3 The Uniform Relocation Assistance and Real Property Acquisition Policies Act of 1970, (42 U.S.C. § 4601), (prohibits unfair treatment of persons displaced or whose property has been acquired because of Federal or Federal-aid programs and projects);

19.3.4 Section 504 of the Rehabilitation Act of 1973, (29 U.S.C. § 794 *et seq*.), as amended, (prohibits discrimination on the basis of disability); and 49 CFR part 27;

19.3.5 The Age Discrimination Act of 1975, as amended, (42 U.S.C. § 6101 *et seq*.), (prohibits discrimination on the basis of age);

19.3.6 Airport and Airway Improvement Act of 1982, (49 USC § 471, Section 47123), as amended, (prohibits discrimination based on race, creed, color, national origin, or sex);

19.3.7 The Civil Rights Restoration Act of 1987, (PL 100-209), (Broadened the scope, coverage and applicability of Title VI of the Civil Rights Act of 1964, The Age Discrimination Act of 1975 and Section 504 of the Rehabilitation Act of 1973, by expanding the definition of the terms "programs or activities" to include all of the programs or activities of the Federal-aid recipients, sub-recipients and contractors, whether such programs or activities are Federally funded or not);

19.3.8 Titles II and III of the Americans with Disabilities Act of 1990, which prohibit discrimination on the basis of disability in the operation of public entities, public and private transportation systems, places of public accommodation, and certain testing entities (42 U.S.C. §§ 12131 – 12189) as implemented by Department of Transportation regulations at 49 CFR parts 37 and 38;

19.3.9 The FAA's Non-discrimination statute (49 U.S.C. § 47123) (prohibits discrimination on the basis of race, color, national origin, and sex);

19.3.10 Executive Order 12898, Federal Actions to Address Environmental Justice in Minority Populations and Low-Income Populations, which ensures non-discrimination against minority populations by

discouraging programs, policies, and activities with disproportionately high and adverse human health or environmental effects on minority and low-income populations;

19.3.11 Executive Order 13166, Improving Access to Services for Persons with Limited English Proficiency, and resulting agency guidance, national origin discrimination includes discrimination because of limited English proficiency (LEP). To ensure compliance with Title VI, you must take reasonable steps to ensure that LEP persons have meaningful access to your programs (70 Fed. Reg. at 74087 to 74100);

19.3.12 Title IX of the Education Amendments of 1972, as amended, which prohibits you from discriminating because of sex in education programs or activities (20 U.S.C. 1681 et seq).

20. MISCELLANEOUS

20.1 Competing Companies: This non-exclusive Agreement allows PMGAA to sell advertising and/or brochure space to possible competitors of Concessionaire and Concessionaire's clients.

20.2 No Waiver. No provision of this Agreement may be waived or modified except by a written instrument signed by the Party against whom such waiver or modification is sought.

20.3 Amendment. This Agreement may be amended only by a written instrument executed by the Parties.

20.4 Cancellation. The Parties hereto acknowledge and agree that this Agreement may be cancelled pursuant to the provisions of ARS § 38-511.

20.5 Invalid Provisions. Should any provision of this Agreement or any application thereof shall be held invalid by a court of competent jurisdiction, the remainder of this Agreement shall not be affected thereby, unless one or both Parties would be substantially and materially prejudiced.

20.6 Litigation Expenses. In the event of litigation between PMGAA and Concessionaire, the prevailing Party shall be entitled to recover its attorney's fees and all costs and expenses of litigation, including witness fees, expert witness fees, and court costs.

20.7 Headings. The headings contained herein are for convenience in reference only and are not intended to define or limit the scope of this Agreement or any term thereof.

20.8 Approvals, Consents, and Notices. All approvals, consents, and notices called for in this Agreement shall be in writing, signed by the appropriate party, and may not be established solely by oral testimony.

20.9 Entire Agreement. This Agreement, including exhibits and attachments hereto at the time of its execution, constitutes the entire Agreement between the Parties hereto and supersedes all prior negotiations, understandings and agreements between the Parties concerning such matters.

21. INCORPORATION OF RECITALS

The recitals set forth above are acknowledged by the Parties to be true and correct and are incorporated herein by this reference.

IN WITNESS WHEREOF, the Parties have executed this Agreement the day and year first above written.

FOR PMGAA:
PHOENIX-MESA GATEWAY AIRPORT AUTHORITY,
an Arizona joint powers airport authority

By: _____ Date: _____
J. Brian O'Neill, A.A.E., Executive Director/CEO

FOR CONCESSIONAIRE:
CERTIFIED FOLDER DISPLAY SERVICE, INC.

By: _____ Date: _____
Bill Deering, Senior Vice President

ATTACHMENT 1

List of Certified ACDBE Firms Concessionaire Will Utilize Under this Agreement

ACDBE FIRM NAME	ADDRESS/PHONE	NAICS CODE(S) ACDBE IS CERTIFIED TO PERFORM PER UCP	DESCRIPTION OF SCOPE OF WORK TO BE PERFORMED UNDER THIS AGREEMENT	NAICS CODE(S) FOR SCOPE OF WORK TO BE PERFORMED UNDER THIS AGREEMENT BY ACDBE	ESTIMATED ANNUAL GROSS RECEIPTS ($)

ATTACHMENT 2
ACDBE Quarterly Reporting Form

Quarterly Reporting of Goods and Services Purchased From ACDBE Firms
Federal Fiscal Year: _____

Reporting Period (circle one): 10/1 – 12/31 1/1 – 3/31 4/1 – 6/30 7/1 – 9/30

Concessionaire:_____ Contract No.:_____

Authorized Person Completing Form:_____

Title:_____ Phone:_____

Email:_____

The following list represents goods and services purchased from ACDBE firm(s) for the above referenced contract during this reporting period in the amounts listed below. Goods and/or services include supplies, wholesale product, local advertising, automobiles, fuel, custodial, accounting, and other professional and contracted services that support the concessionaire's operations for this contract.

ACDBE Firm Providing Goods and/or Services	ACDBE Firm Contact Name, Phone, and Email Address	Type of Goods and/or Services Provided	NAICS Code(s)	Quarterly Expenditure(s) to this Firm
				$
				$
				$
				$
				$
				$
Total Goods and Service Provided by ACDBE Firms				**$**

Authorized Signature:_____ Date:_____

Concessionaires must complete and submit this form by October 20, January 20, April 20, and July 20 to jlichtenberger@gatewayairport.com. If no ACDBE firms were used in the reporting period, the concessionaire should list "None" in the table before submitting the form.

To verify if a firm is an ACDBE, visit the Arizona Unified Transportation Registration and Certification System (AZ UTRACS) at this link: https://utracs.azdot.gov/search

EXHIBIT A
Display Areas

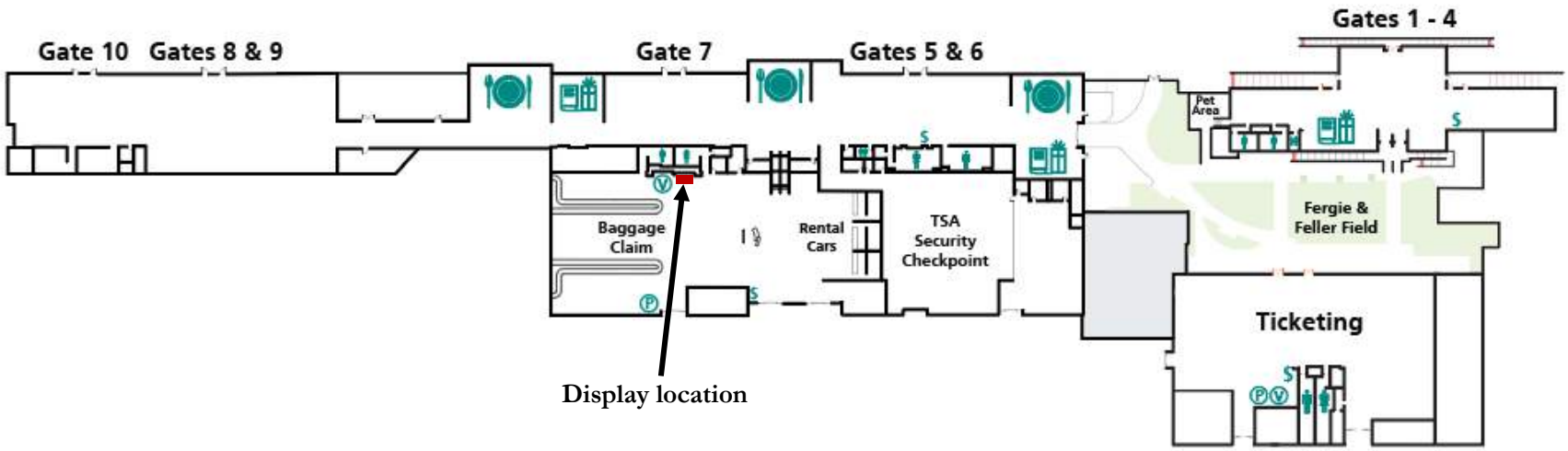

EXHIBIT B

PMGAA Standard Terms and Conditions

These Standard Terms and Conditions are attached to that certain Brochure Display and Distribution Concession Agreement (referred to in this Section as "Contract") between Certified Folder Display Service, Inc (referred to in this Section as "Offeror") and Phoenix-Mesa Gateway Airport Authority (referred to in this Section as "PMGAA").

1. **Certification.** Offeror certifies:
   a. The award of this Contract did not involve collusion or other anti-competitive practices.
   b. It shall not discriminate against any employee or applicant for employment in violation of Federal Executive Order 11246, or A.R.S. Section 31-1461, et. seq.
   c. It has not given, offered to give, nor intends to give at any time hereafter, any economic opportunity, future employment, gift, loan, gratuity, special discount, trip, favor, or service to a public servant in connection with this Contract; and Offeror hereby certifies that the individual signing this Contract is an authorized agent for Offeror and has the authority to bind the Offeror to the Contract.
2. **Dispute Resolution**.
   a. **Negotiations**. If a dispute arises out of or relates to this Contract or its breach, the parties to this Contract shall endeavor to settle the dispute through direct discussions as a condition precedent to mediation or binding dispute resolution.
   b. **Mediation**. Should the parties to this Contract be unable to resolve their dispute through direct negotiations, the parties to this Contract, upon the written request of either, shall engage in mediation, to be administered privately by a mediator and according to rules mutually agreed upon by the parties to this Contract, or, the absence of such mutual agreement, by a mediator appointed by JAMS and administered by JAMS in accordance with its then-current mediation rules. The fees and costs of mediation shall be split equally by the parties to this Contract, but subject to reallocation following binding dispute resolution.
   c. **Binding Dispute Resolution**. Should the parties to this Contract be unable to resolve their dispute through direct negotiations or mediation, either party may, within the time limitations for bringing claims under Arizona law and this Contract, commence formal dispute resolution proceedings. Both parties to this Contract consent to binding arbitration administered by JAMS according to its then current arbitration rules, provided, however, that (i) in the event both parties agree, the arbitration may be administered privately by an arbitrator and according to rules mutually agreed upon by the parties to this Contract, and (ii) in the event any party seeks relief against the other party or against a non-party which cannot fully be granted in arbitration, by reason of non-joinder or otherwise, the parties to this Contract are excused from this arbitration requirement and the parties to this Contract shall proceed in the state or federal courts of competent jurisdiction and located in Maricopa County, Arizona. In any arbitration or litigation, the prevailing party shall be entitled to an award of its reasonable attorneys' fees and costs as determined by the arbitrator or court as applicable.
3. **Independent Contractor.** At all times, each party acts in its individual capacity not as agent, employee, partner, joint venturer, or associate of the other party. An employee or agent of one party may not be deemed or construed to be the employee or agent of the other party for any purpose whatsoever. Neither Offeror nor any of its employees are entitled to compensation from PMGAA in the form of salaries, paid vacation, or sick days. PMGAA will not provide any insurance to Offeror, including *Workers' Compensation* coverage. PMGAA will not withhold FICA, taxes, or any similar deductions from PMGAA's payments under this Contract.
4. **Affirmative Action.** Offeror shall abide by all the federal and state of Arizona provisions for equal opportunity in the work place.
5. **Human Relations**. Offeror shall abide by all the federal and state of Arizona provisions against discrimination of disadvantaged business enterprises in applicable PMGAA contracts.

6. **Americans with Disabilities Act.** Offeror shall comply with all applicable provisions of the *Americans with Disabilities Act* (Public Law 101-336, 42 U.S.C. 12101-12213) and applicable federal regulations under the *Act*.
7. **Confidentiality of Records**. Offeror shall establish and maintain procedures and controls that are acceptable to PMGAA for the purpose of assuring that no information contained in its records or obtained from PMGAA or from others in carrying out its functions under the Contract shall be used by or disclosed by it, its agents, officers, or employees, except as required to efficiently perform duties under this Contract. Persons requesting such information should be referred to PMGAA. Offeror also agrees that any information pertaining to individual persons shall not be divulged other than to employees or officers of Offeror as needed for the performance of duties under the Contract, unless otherwise agreed to in writing by PMGAA.
8. **Gratuities.** PMGAA may, by written notice to the Offeror, cancel this Contract if it is found that gratuities, in the form of entertainment, gifts or otherwise, were offered or given by Offeror or any agent or representative of Offeror, to any officer or employee of PMGAA involved in the amending, or the making of any determinations with respect to the performing of such Contract. If this Contract is canceled by PMGAA under this provision, PMGAA shall, in addition to any other rights and remedies, repay to the Offeror the amount of the gratuity.
9. **Applicable Law.** This Contract shall be governed by, and PMGAA and Offeror shall have, all remedies afforded each by the *Uniform Commercial Code*, as adopted in the state of Arizona, except as otherwise provided in this Contract or in laws pertaining specifically to PMGAA. This Contract shall be governed by the laws of the state of Arizona, and suits pertaining to this Contract shall be brought only in federal or state courts in the state of Arizona.
10. **Contract**. This Contract is based on and the result of a negotiated Scope of Services and Proposal, Bid or Statement of Qualifications submitted by Offeror under this RFP, IFB or RFQ. The Contract contains the entire agreement between PMGAA and Offeror. No prior oral or written agreements, contracts, proposals, negotiations, purchase orders, or master agreements (in any form) are enforceable between the parties.
11. **Contract Amendments**. This Contract shall be modified only by a written amendment signed by the PMGAA Executive Director or his/her designee, and persons duly authorized to enter into contracts on behalf of Offeror.
12. **Provisions Required by Law**. Each and every provision of law and any clause required by law to be in the Contract shall be read and enforced as though it were included herein, and if through mistake or otherwise any such provision is not inserted, or is not correctly inserted, then upon the application of either party the Contract shall forthwith be physically amended to make such insertion or correction.
13. **Severability.** The provisions of this Contract are severable to the extent that any provision or application held to be invalid shall not affect any other provision or application of the Contract, which may remain in effect without the valid provision, or application.
14. **Protection of Government Property.** Offeror shall use reasonable care to avoid damaging all PMGAA property, including buildings, equipment, and vegetation (such as trees, shrubs, and grass). If Offeror damages PMGAA's property in any way, Offeror shall immediately repair or replace the damage at no cost to PMGAA, as directed by the PMGAA Executive Director. If Offeror fails or refuses to repair or replace the damage, then PMGAA may terminate the Contract, and PMGAA shall deduct the repair or replacement cost from money due Offeror under the Contract.
15. **Interpretation – Parol Evidence.** This Contract is intended by the parties as a final expression of their agreement and is intended also as a complete and exclusive statement of the terms thereof. No course of prior dealings between the parties and no usage of the trade shall be relevant to supplement or explain any term used in this Contract. Acceptance or acquiescence in a course of performance rendered under this Contract shall not be relevant to determine the meaning of this Contract even though the accepting or acquiescing party has knowledge of the nature of the performance and opportunity to object.
16. **Assignment and Subcontracts.** Offeror shall not assign any rights or interest nor enter into any subcontract with any other party to furnish any of the materials, goods or services specified herein without the prior written permission of PMGAA. PMGAA may, at its sole discretion, accept or reject proposed subcontractors or assignment. PMGAA shall notify Offeror of its acceptance or rejection within forty-five

(45) days or written request by Offeror. All subcontracts shall comply with federal and state laws and regulations applicable to the materials, goods or services covered by the subcontract and shall include all the terms and conditions set forth herein, which shall apply with equal force to the subcontract, as if the subcontractor were the Offeror referred to herein. Offeror is responsible for Contract performance whether subcontractors are used.

17. **No Waiver.** No provision in this Contract shall be construed, expressly or by implication, to waive either party's existing or future claim, right, or remedy available by law for breach of contract. The failure of either party to insist on strict performance of any Contract term or condition; to exercise or delay exercising any right or remedy provided in the Contract or by law; or to accept materials, services, or Offeror's services under this Contract or imposed by law, shall not be deemed a waiver of any right of either party to insist upon strict performance of the Contract.
18. **Indemnification.** To the fullest extent permitted by law, Offeror shall defend, save, indemnify, and hold harmless PMGAA, its agents, representatives, officers, directors, officials, and employees (collectively the "Indemnitees"), for, from and against all claims, damages, losses and expenses, including but not limited to attorney fees, court costs, expert witness fees, and the cost of appellate proceedings, relating to, arising out of, or alleged to have resulted from the Offeror's acts, errors, omissions, or mistakes relating to Offeror's services under this Contract.
19. **Right to Assurance.** Whenever one party to this Contract in good faith has reason to question the other party's intent to perform, the former party may demand that the other party give a written assurance of this intent to perform. If a demand is made and no written assurance is given within five (5) business days, the demanding party may treat this failure as an anticipatory repudiation with this Contract.
20. **Advertising.** Offeror shall not advertise or publish information concerning this Contract without prior written consent of PMGAA.
21. **Right to Inspect.** PMGAA may, at reasonable times, and at PMGAA's expense, inspect the place of Offeror's or any of Offeror's subcontractor's business, which is related to the performance of this Contract or related subcontract.
22. **Force Majeure.** In the event either party shall be delayed or hindered in or prevented from the performance of any covenant, agreement, work, service, or other act required under this Contract to be performed by such party ("Required Act"), and such delay or hindrance is due to causes entirely beyond its control such as riots, insurrections, martial law, civil commotion, war, fire, flood, earthquake, existence of asbestos or other environmental condition requiring remediation prior to the commencement of construction, or other casualty or acts of God ("Force Majeure Event"), then the performance of such Required Act shall be excused for the period of delay and the time period for performance of the Required Act shall be extended by the same number of days in the period of delay. For purposes of this Contract, the financial inability of Offeror to perform any Required Act, including, without limitation, failure to obtain adequate or other financing shall not be deemed to constitute a Force Majeure Event. A Force Majeure Event shall not be deemed to commence until ten (10) days before the date on which the party who asserts some right, defense, or remedy arising from or based upon such Force Majeure Event gives written notice thereof to the other party. If abnormal adverse weather conditions are the basis for a claim for an extension of time due to a Force Majeure Event, the written notice shall be accompanied by data substantiating (a) that the weather conditions were abnormal for the time and could not have been reasonably anticipated and (b) that the weather conditions complained of had a significant adverse effect on the performance of a Required Act. To establish the extent of any delay to the performance of a Required Act due to abnormal adverse weather, a comparison will be made of the weather for the time of performance of the Required Act with the average of the preceding ten (10) years' climatic range based on the National Weather Service statistics for the nearest weather reporting station to the Airport. No extension of time for or excuse for a delay in the performance of a Required Act will be granted for rain, snow, wind, cold temperatures, flood, or other natural phenomena of normal intensity for the locality where the Airport is located.
23. **Exclusive Possession.** All services, information, computer program elements, reports, and other deliverables, which may be created under this Contract, are the sole property of PMGAA and shall not be used or released by Offeror or any other person except with prior written permission by PMGAA.

24. **Licenses.** Offeror shall maintain in current status all federal, state, and local licenses and permits required for the operation of the business conducted by Offeror as applicable to this Contract.
25. **Subsequent Employment.** PMGAA may cancel this Contract without penalty or further obligation in accordance with A.R.S. Section 38-511 if any person significantly involved in initiating, negotiating, securing, drafting, or creating the contract, on behalf of the PMGAA is or becomes, at any time while the Contract or any extension of the contract is in effect, an employee of, or a contractor to any other party to this Contract with respect to the subject matter of the Contract. Such cancellation shall be effective when the parties to this Contract receive written notice from PMGAA, unless the notice specifies a later time.
26. **Clean Up.** Offeror shall at all times keep Contract performance areas, including storage areas used by the Offeror, free from accumulation of waste material or rubbish and, prior to completion of the work, remove any rubbish from the premises and all tools, scaffolding, equipment and materials not property of PMGAA. Upon completion of any repair, Offeror shall leave the work and premises in clean, neat, and workmanlike condition.
27. **Patents.** Offeror shall defend, indemnify, and hold harmless PMGAA, its officers and employees from all liabilities, claims, damages, costs, or expenses, including, but not limited to attorneys' fees, for any alleged infringement of any person's patent rights or copyrights in consequence of the use by PMGAA, its officers, employees, agents, and other duly authorized representatives of tangible or intellectual property supplied to PMGAA by Offeror under this Contract.
28. **Records and Audit Rights.** Offeror's and all of its approved subcontractors' books, records, correspondence, accounting procedures and practices, and any other supporting evidence relating to this Contract, including the papers of all Offeror and subcontractor employees that work on the Contract (all the foregoing collectively referred to as "Records"), must be open to inspection and subject to audit and/or reproduction during normal working hours by PMGAA. PMGAA is entitled to evaluate and verify all invoices, payments or claims based on Offeror's and its subcontractor's actual costs (including direct and indirect costs and overhead allocations) incurred or units expended directly in the performance of work under this Contract. For any audit under this Section, Offeror and its subcontractors hereby waive the right to keep such Records confidential. PMGAA is entitled to access to these Records from the effective date of this Contract for the duration of the work and until five years after the date of final payment by PMGAA to Offeror under the Contract. During normal working hours, PMGAA is entitled to access to all necessary Offeror and subcontractor facilities and shall be provided adequate and appropriate workspace, in order to conduct audits under this Section. PMGAA shall give Offeror or subcontractors reasonable advance notice of intended audits. Offeror shall require its subcontractors to comply with the provisions of this Section by including its requirements in all subcontracts related to this Contract.
29. **E-Verify Requirements.** To the extent applicable under A.R.S. § 41-4401, Offeror and its subcontractors warrant compliance with all federal immigration laws and regulations that relate to their employees, and compliance with the E-Verify requirements under A.R.S. §23-214(A). Offeror's or its subcontractors' failure to comply with such warranty shall be deemed a material breach of this Contract and may result in the termination of this Contract by PMGAA. PMGAA shall have the right to inspect the papers of Offeror's and any of Offeror's subcontractor's employee who works on this Contract to ensure the Offeror is complying with this paragraph.

EXHIBIT C
PMGAA's Published Airport Rules and Regulations

Concessionaire agrees to comply with Phoenix-Mesa Gateway Airport Authority's published Airport Rules and Regulations as amended from time to time. The Airport Rules and Regulations can be found in the Policies, Documents, and Forms webpage at www.gatewayairport.com/policiesdocumentsandforms.

Phoenix-Mesa Gateway Airport Authority
5835 S Sossaman Road
Mesa, Arizona 85212-6014
www.gatewayairport.com

Board Action Item

Re: Resolution 21-12

To: Board of Directors
From: Shea Joachim, CEcD, Business Development Director
Through: J. Brian O'Neill, A.A.E., Executive Director/CEO
Subject: TEM Enterprises ("Avelo Airlines") Operating Agreement
Date: April 20, 2021

Proposed Motion
To authorize the Executive Director to execute an operating agreement with TEM Enterprises for commercial air service at the Airport.

Narrative
TEM Enterprises, a Nevada corporation, is the parent company for Avelo Airlines. Avelo Airlines is a brand-new airline announced in 2020. Avelo Airlines has not conducted an inaugural flight yet but intends to initiate service in May 2021.

The operating agreement between the Authority and Avelo Airlines outlines the requirements of Avelo Airlines for offering commercial passenger service at the Airport, identifies the applicable charges for facilities and services at the Airport, and contractually obligates Avelo Airlines to adhere to the Airport's Rules and Regulations and Minimum Standards.

Fiscal Impact
Variable revenues are more difficult to forecast because they are based on passenger activity. However, the Airport anticipates increases in concessionaire revenue, rental car fees, Car Rental Facility Charges (CFC's), parking fees, Passenger Facility Charges (PFC's) and fuel service charges.

Attachment(s)
Airline Operating Agreement

RESOLUTION NO. 21-12

WHEREAS, the Phoenix-Mesa Gateway Airport Authority ("Authority"), a joint powers airport authority formed pursuant to Arizona Revised Statute §28-8521 *et seq.* owns and operates the Phoenix-Mesa Gateway Airport ("Airport"); and

WHEREAS the Authority desires to authorize the Executive Director to execute an operating agreement with TEM Enterprises for commercial air service at the Airport.

NOW, THEREFORE, BE IT RESOLVED by the Board of Directors of the Authority as follows:

> **The Board of Directors of the Authority hereby authorizes the Executive Director to execute an operating agreement with TEM Enterprises for commercial air service at the Airport. This resolution also authorizes the Chair or Executive Director/CEO to execute such Agreement, with such insertions, deletions, and changes as may be approved by the Chair or Executive Director/CEO, necessary to carry out the purposes and intent of this Resolution.**

Passed and adopted by the Authority this 20th day of April, 2021.

Gail Barney, Chair

ATTEST:

Misty Johnson, Clerk of the Board

APPROVED AS TO FORM:

Jill Casson Owen, Attorney

Phoenix-Mesa Gateway Airport Authority

Air Carrier Operating Agreement

with

TEM Enterprises

Effective Date: May 1, 2021

TABLE OF CONTENTS

1. PERMITTED ACTIVITIES AND CONDITIONS OF AIRPORT USE. 2
2. TERM. 3
3. EXCLUSIVE AND NONEXCLUSIVE RIGHTS. 3
4. RENTALS, FEES AND CHARGES 4
5. REPORTING REQUIREMENTS 5
6. INSURANCE 6
7. DISABLED OR ABANDONED AIRCRAFT. 7
8. ENVIRONMENTAL COMPLIANCE. 8
9. TAXES AND RELATED IMPOSITIONS. 8
10. RULES, REGULATIONS AND MINIMUM STANDARDS. 8
11. DEFAULT: TERMINATION BY PMGAA 9
12. GOVERNING LAW; ATTORNEY'S FEES 9
13. NONWAIVER 10
14. ASSIGNMENT 10
15. OTHER RESTRICTIONS 10
16. AIRPORT SECURITY. 10
17. AIRPORT SECURITY BADGE 10
18. NOTICE. 10
19. PRIOR AGREEMENTS AND PERMITS. 11
20. CORPORATE AUTHORIZATION 11
21. MISCELLANEOUS. 11
22. INCORPORATION OF RECITALS. 13

EXHIBIT A 14
EXHIBIT B 15
EXHIBIT C 16

Phoenix-Mesa Gateway Airport Authority
AIR CARRIER OPERATING AGREEMENT

This Air Carrier Operating Agreement (the "Agreement") is executed to be effective the 1st day of May 2021 (the "Effective Date") between the **PHOENIX-MESA GATEWAY AIRPORT AUTHORITY ("PMGAA")**, a joint powers airport authority authorized under the laws of the State of Arizona ("PMGAA"), and **TEM Enterprises, a Nevada corporation authorized to do business in Arizona** ("CARRIER"). PMGAA and CARRIER may be referred to collectively as "Parties," and each separately may be referred to as a "Party."

WITNESSETH:

WHEREAS, PMGAA is the owner and operator of the Phoenix-Mesa Gateway Airport generally located at the intersection of Ray Road and Sossaman Road, City of Mesa, Maricopa County, Arizona (the "Airport"); and

WHEREAS, PMGAA has the right to enter into Agreement, license and grant the use of property and facilities on the Airport and has full power and authority to enter into this Agreement in respect thereof; and

WHEREAS, CARRIER provides commercial airline services, charters, flight crews, aircraft and desires to use the Airport facilities for commercial operations; and

WHEREAS, CARRIER desires to obtain certain non-exclusive rights to use the common use areas of the passenger terminal, services and privileges in connection with the use of the Airport and its facilities, and PMGAA is willing to grant the same to CARRIER upon the terms and conditions hereinafter stated; and

WHEREAS, the Parties agree to enter into this Agreement, specifying the rights and obligations of the Parties with respect to the operation of the Airport by PMGAA and the use and/or occupancy of the Airport by CARRIER;

NOW, THEREFORE, for good and valuable consideration, the mutual covenants and conditions herein set forth and the sufficiency of which is agreed to by the Parties, the Parties hereby agree as follows:

1. PERMITTED ACTIVITIES AND CONDITIONS OF AIRPORT USE.

1.1 CARRIER shall have the right to use, in common with others, the passenger terminal, taxiways, runways and air navigational aids of the Airport for the purpose of conducting its FAR Part 121 scheduled domestic operations, public charter, private charter and the landing and taking off of aircraft incidental thereto, and provided, however, such activities and services are performed in strict accordance with applicable PMGAA Minimum Standards, upon terms and conditions as herein provided.

1.2 RESERVED.

1.3 CARRIER shall not engage in any other commercial or revenue producing activity at the Airport (excluding charter activities by CARRIER, and charter activities requested by PMGAA) without first applying for and receiving written approval for such activity from PMGAA. In the event any other commercial or revenue producing activity is engaged in by CARRIER prior to obtaining such approval, without waiver or limitation of any other remedies available to PMGAA at law or equity, CARRIER hereby agrees to remit to PMGAA the sum equal to TEN PERCENT (10%) of gross billings for such unauthorized activity, plus any expenses incurred by PMGAA in the course of any audit conducted for all of CARRIER's activities.

1.4 CARRIER shall at all times comply with all Federal, State and local laws, ordinances, rules and regulations which are applicable to its operations or the Premises itself (including but not limited to the Americans with Disabilities Act), including all laws, ordinances, rules and regulations adopted after the Effective Date. Carrier shall at all times comply with the Phoenix-Mesa Gateway Airport Authority Rules and Regulations, as the same may be amended from time to time in the Authority's sole and absolute discretion.

2. TERM.

2.1 Initial Term. Subject to earlier termination as provided herein, the term of this Agreement shall be one (1) year, commencing on the Effective Date (the "Term").

2.2 Renewal Term. Provided CARRIER is not then in default of this Agreement, the Term may be extended for one (1) year, without action by the Parties, unless otherwise terminated as provided herein.

2.3 Either Party may terminate this Agreement by providing the notified Party ninety (90) calendar days advance written notice of the terminating Party's intent to do so.

3. EXCLUSIVE AND NONEXCLUSIVE RIGHTS.

3.1 CARRIER shall have the exclusive and non-exclusive right to occupy and use the designated areas of the Airport while in compliance with the terms and conditions of this Agreement. All rights granted to CARRIER under this Agreement are nonexclusive, except by express written agreement herein. PMGAA may, in its sole discretion and at any time, permit third parties to conduct any and all business activities at the Airport that PMGAA deems appropriate, or conduct such activities itself, provided that such activities do not require or materially interfere with CARRIER's use of the Airport.

3.2 PMGAA shall provide CARRIER with exclusive use of the Airport facilities described in **EXHIBIT C.**

3.3 PMGAA shall provide CARRIER with common use of one (1) boarding gate and four (4) ticketing positions. In addition, CARRIER shall have common use access to additional ticket counters, gate hold rooms, and the baggage claim area for scheduled flight operations, the scheduling of such use is subject to the guidelines outlined in PMGAA's Common Use Facilities Operating Procedures. Common use requirements shall be scheduled with PMGAA's Operations & Maintenance department prior to any planned use. CARRIER shall not schedule or advertise flight schedules originating from or destined for Phoenix-Mesa Gateway Airport without prior and in advance coordination and confirmation of terminal availability.

3.4 PMGAA has implemented Common Use Facilities Operating Procedures. PMGAA reserves the right to modify said procedures from time-to-time, as it deems necessary in its sole and absolute discretion and authority to accomplish its purposes. CARRIER shall at all times comply with these operating procedures.

3.5 PMGAA has implemented an Airport Security Program in a form acceptable to the Transportation Security Administration. PMGAA reserves the right to modify said program from time-to-time, as it deems necessary to accomplish its purposes. CARRIER shall at all times comply with the Airport Security Program and indemnify, defend, hold and save PMGAA, its board members, member governments, officers, officials, employees, and agents free and harmless for, from, and against any violations of said Security Program caused, or alleged to be caused, by the acts, errors or omissions of CARRIER, its employees, agents, invitees or contractors.

4. RENTALS, FEES AND CHARGES

4.1 General. Rent for use of any exclusive use space is due and payable at the beginning of each month. All other fees are assessed at the time of each use, flight, or service, as applicable, and are due and payable no later than the twentieth (20th) day of the following month in which the use or activity occurred ("Fee Due Date"). The CARRIER shall self-report its flight activity monthly to PMGAA pursuant to Section 5. Delinquent rents and fees shall be assessed a finance charge in accordance with Section 4.11.2. Any ground handling services requested of PMGAA or other authorized service provider by Carrier shall be governed by a separate agreement. In any event, CARRIER shall be the responsible party for the purposes of this Air Carrier Operating Agreement, and therefore CARRIER shall pay, or cause to be paid, to PMGAA, the fees and charges as outlined below:

4.2 Landing Fees. CARRIER shall pay a landing fee at a rate equal to the amount reflected on the most current Airport Rates & Charges at the time of the aircraft operation, for each flight operated by or in conjunction with CARRIER that is subject to a landing fee (as of October 1, 2020 $1.92/1000 lbs. MGLW). The weight used to determine the landing fee for any particular aircraft shall be its maximum certificated gross landing weight (MGLW), as certified by the Federal Aviation Administration.

4.3 Terminal Use Fees. Terminal Use includes ticket counter(s) and lobby area, secure hold room and boarding area podium, aircraft parking position (2 hours), baggage claim area, and common use computer equipment per flight. CARRIER shall pay PMGAA a Terminal Use Fee in the amount reflected on the most current Airport Rates & Charges. Terminal use fee increases will not exceed an average of three percent (3%) annually for the duration of this Agreement.

4.4 Common Use Set-up and Operating Fees. CARRIER shall pay PMGAA for common use terminal equipment, internet connection, and dark fiber per the most current Airport Rates & Charges.

4.5 Aircraft Parking Fees. CARRIER shall pay PMGAA a fee per the most recent Airport Rates & Charges Schedule for any aircraft occupying an aircraft parking position, including terminal gates and remote parking positions, for more than three hours; and for any portion of each 24hour parking period. This fee shall be waived if the aircraft performed a revenue service operation the day prior or will perform a revenue service operation the day after being parked for more than three hours.

4.6 Passenger Facility Charges. CARRIER shall pay monthly to PMGAA, on or before the Twentieth (20th) day of each month (the "Due Date"), a PFC in the amount of Four and 50/100 Dollars ($4.50) for each Enplaned Passenger departing the Airport on an CARRIER Revenue Flight during the previous calendar month. The collection of said fees by CARRIER shall be subject to the terms, conditions and methods of collection set forth in the Aviation Safety and Capacity Expansion Act of 1990, Section 9110, at it now exists or is modified hereafter (the "PFC Act").

4.7 Monthly Tie Down Fees. CARRIER shall pay Monthly Tie Down Fees per Airport Rates and Charges.

4.8 Fueling Fees. CARRIER shall execute a Fuel Service Agreement with PMGAA.

4.9 Aircraft Ramp Space and Services. CARRIER shall pay PMGAA monthly for any aircraft line services, out-of-station Aircraft Rescue and Firefighting (ARFF) services, operations safety officers, ground service equipment use, fuel spill response teams and any other space or service requirements as specified in the Airport Rates & Charges, Airport Fees, Services and Rental Rates or, if not so specified in those documents, as determined by PMGAA (collectively, "Additional Services").

4.10 Other Fees. Unless specified otherwise herein, CARRIER shall pay PMGAA for its usage or rental of PMGAA equipment and the performance of services by PMGAA within TEN (10) business days of CARRIER's receipt of an invoice (the "Due Date") for same from PMGAA. The amount of such fees shall be as provided by separate agreement between CARRIER and PMGAA, or, in the absence of such agreement, as specified in the most current Airport Rates and Charges Schedule or PMGAA's Price Listing in effect when the charge or fee was incurred. Failure to remit payment by

the Due Date may result in the suspension of further equipment rentals or services until payment is made to PMGAA in full.

4.11 With regard to the fees and charges specified in SECTION 4 above, the following conditions and considerations shall apply:

4.11.1 Airport Rates & Charges and Airport Fees, Services and Rental Rates. The Airport Rates & Charges and Airport Fees, Services and Rental Rates referred to in this Agreement may be revised from time to time. CARRIER shall pay the most current fee(s) at the time of the event or service, as applicable, unless specifically outlined in this Agreement. The current Airport Rates & Charges and Airport Fees, Services and Rental Rates are attached as **EXHIBIT A** and are subject to change without prior notice or approval of CARRIER.

4.11.2 Finance Charges and Late Fees. If CARRIER fails to pay any charge due and owing to PMGAA in full on or before the applicable due date, CARRIER shall be responsible for interest on the unpaid fee or charge at the rate of EIGHTEEN PERCENT (18%) per annum from the due date until payment in full is made. In addition, in the event any payment is received more than TEN (10) days after the due date, a late penalty of TEN PERCENT (10%) of the amount of such delinquent amount shall be due and payable in addition thereto.

4.11.3 Books and Records. CARRIER shall maintain permanent books, records and ledgers accurately reflecting the total passengers, and total number of monthly aircraft landings for all aircraft subject to a landing fee indicating the make, type (including model designation), registration number, maximum certificated gross landing weight, and arrival and departure time of each aircraft involved. These records shall be made available to PMGAA upon request. PMGAA may audit the books, records and ledgers maintained by CARRIER in accordance with this SECTION 4. In the event an audit reveals a deficiency of TWO PERCENT (2%) or greater in the amount of payment made pursuant to this SECTION 4, CARRIER shall not only pay such deficiency but also the cost of any audit performed by PMGAA.

5. REPORTING REQUIREMENTS

5.1 CARRIER shall file with PMGAA written reports for the items specified below no later than the TENTH (10th) day of the calendar month following the month in which the specified activities occurred (the "Due Date"). Such reports shall cover all of CARRIER's Airport activities during said month, and include activity handled by CARRIER for other Air Transportation Companies not having an agreement with PMGAA providing for its own submission of activity data to PMGAA.

5.1.1 A complete listing of all of CARRIERS's scheduled aircraft landings and actual aircraft landings at the Airport, including aircraft type and MGTOW; and a listing, by destinations, of the number of flights that qualify under applicable waiver agreements for any landing fee waivers;

5.1.2 A complete listing of CARRIER's Enplaned Passengers and Deplaned Passengers, specified by and including the type of aircraft;

5.1.3 A complete listing, by date and flight number, of CARRIER's commercial cargo loaded and off loaded.

5.2 PMGAA shall have the right to rely on said activity reports in determining rentals and other charges due hereunder; provided, however, CARRIER shall have full responsibility for the accuracy of said reports. Payment deficiencies due to incomplete or inaccurate activity reports shall be subject to interest charges as set forth in SECTION 4.11.2 herein.

5.3 CARRIER shall at all times maintain and keep books, ledgers, accounts or other records wherein are accurately kept all entries reflecting the activity statistics to be reported pursuant to SECTION

5. Such records shall be retained by CARRIER for a period of THREE (3) years subsequent to the activities reported therein, or such other retention period as set forth in 14 CFR Part 249.7, and made available at Mesa, Arizona for audit and/or examination by PMGAA or its duly authorized representative during all normal business hours. CARRIER shall produce such books and records at Mesa, Arizona within THIRTY (30) calendar days of PMGAA's notice to do so or pay all reasonable expenses, including but not limited to, transportation, food, lodging and other related expenses, necessary for an auditor selected by PMGAA to audit said books and records.

5.4 The cost of audit, with the exception of the aforementioned expenses, shall be borne by PMGAA; provided, however, the total cost of said audit shall be borne by CARRIER if either or both of the following conditions exist:

5.4.1 The audit reveals an underpayment of more than FIVE PERCENT (5%) of rentals, fees and charges due hereunder, as determined by said audit; and/or

5.4.2 CARRIER has failed to maintain true and complete books, records, accounts and supportive source documents in accordance with SECTION 5.

5.5 Payments. All payments due and payable hereunder shall be paid in lawful money of the United States of America, without set off, by check made payable to the Phoenix-Mesa Gateway Airport Authority and delivered to:

Phoenix-Mesa Gateway Airport Authority
Attn.: Accounts Receivable
5835 S. Sossaman Road
Mesa, Arizona 85212-0614

6. INSURANCE

6.1 General. Carrier shall procure and maintain the following types and amounts of insurance for its operations at the Airport throughout the Term of this Agreement and any Extension thereto:

Aircraft Liability insurance covering third party bodily injury and property damage, and passenger and contractual liabilities which shall protect and indemnify PMGAA from any and all claims arising in connection with aircraft movement on the Airport in amounts as are customarily carried by a carrier of like kind and size, but in no event less than $250,000,000.00 per occurrence. Such insurance shall also insure against third party liabilities arising from War Risk perils.

Airport Premises Liability insurance third party bodily injury and property damage, including coverage for "premises/operations," "products and completed operations," "host liquor" and "blanket contractual" liabilities in an amount not less than $250,000,000.00 per occurrence.

Comprehensive Automobile Liability insurance for all owned, non-owned and hired vehicles operated airside on the Airport that are assigned to or used in the performance of commercial activities in the amount of $25,000,000.00 per occurrence or combined single limit. If any hazardous materials are transported in conjunction with Carrier's business operations at or on the Airport, an MSC 90 endorsement shall be required in addition thereto.

Workers' Compensation insurance, as required by law, and *Employer's Liability* insurance in the amount of $1,000,000.

6.2 Additional Insurance. At any time during the Term of this Agreement, including any Extension thereto, PMGAA may, if in its reasonable determination the insurance coverage required by this SECTION 6 is no longer adequate, require CARRIER to increase its coverage to commercially reasonable amounts.

6.3 Blanket Insurance. CARRIER's insurance obligations under this Agreement may be satisfied by means of the general corporate "blanket" policies carried by it and evidenced by the insurance carrier's standard certificates thereof.

6.3.1 Use of Proceeds. Proceeds of any liability and property damage insurance required under this SECTION 6 shall be applied toward extinguishing, satisfying or remedying the liability, loss or damage with respect to which such proceeds may be paid.

6.4 Indemnity. To the fullest extent permitted by law CARRIER (as "indemnitor") shall indemnify, defend, hold and save PMGAA, its board members, and its member governments, officers, officials, employees, and agents (as "indemnitee") free and harmless of, for, from and against any and all Losses caused in whole or in part by (a) any act or omission of CARRIER (including indemnitor's officers, officials, agents, employees, contractors or invitees), (b) CARRIER's operations at the Airport, (c) CARRIER's violations of said Security Program caused, or alleged to be caused, by the acts, errors or omissions of CARRIER, its employees, agents, invitees or contractors, or (d) any default by CARRIER hereunder. This indemnification shall exclude responsibility for any consequential damages and for claims arising by reason of the negligent or wrongful act of PMGAA or its employees, contractors or agents. For purposes hereof "Losses" shall mean any and all losses, liabilities, judgments, suits, claims, damages, fines, penalties, costs and expenses (including reasonable attorneys and consultant fees, investigation costs, monitoring costs, remediation costs, and court costs), of any kind or nature." In carrying out the defense of any claim subject to its indemnification obligations hereunder, CARRIER shall use counsel reasonably acceptable to PMGAA.

6.5 Insurance Form. Each insurance policy obtained pursuant to this SECTION 6, except for Workers' Compensation and Employer Liability policies, shall: (i) name PMGAA as a certificate holder or an additional insured to the extent of CARRIER's contractual indemnity obligations; (ii) contain a provision that written notice of cancellation or modification thereof shall be given to PMGAA not less than THIRTY (30) calendar days before such cancellation or modification takes effect (TEN (10) days in the case of nonpayment of premium); and (iii) contain a waiver of subrogation in favor of PMGAA. CARRIER shall not permit any insurance policy to be canceled or modified without PMGAA's written consent unless equivalent replacement policies are issued with no lapse in coverage. All policies shall be obtained from insurance companies licensed to do business in the State of Arizona and possessing a rating of at least A - VII or higher from the A.M. Best Company, or an equivalent rating approved by PMGAA.

7. DISABLED OR ABANDONED AIRCRAFT.

7.1 Should any aircraft owned or operated by CARRIER, through accident or for any other reason, become disabled or be abandoned in any area which could interfere with the continuous, normal operations of any of the runways, taxiways and airfield facilities at the Airport, CARRIER shall, at CARRIER'S sole cost and expense:

7.1.1 Immediately remove said aircraft to such location as may be designated by PMGAA, unless such aircraft is required to remain in place pending investigation by the appropriate regulatory agency or agencies of the federal government; and

7.1.2 In the event of any accident where federal investigation in place is required, immediately upon receiving clearance to do so from the appropriate federal agency, remove said aircraft and any wreckage or debris resulting therefrom to the area(s) designated by said federal agency authorizing such removal; otherwise, such aircraft wreckage and debris shall be immediately removed from the Airport or stored at a location approved by PMGAA.

7.2 Should CARRIER fail to proceed immediately to remove disabled aircraft, or should aircraft owned or operated by CARRIER be abandoned on the Airport, PMGAA shall have the right to remove such aircraft by any means PMGAA deems necessary under the circumstances, and CARRIER shall, to the fullest extent permitted by law, indemnify, defend, keep and hold PMGAA, its members, board of directors, officers, agents, officials, servants, employees and contractors harmless from and against any and all claims, costs, loss, liability, actions, suits, proceedings, damage or expense (including costs of suit and attorneys' fees and expenses) incurred by PMGAA or claimed by anyone by reason of removal of said aircraft, injury to persons or property or damages to such aircraft caused by such removal, as well as storage costs therefor. CARRIER shall reimburse PMGAA for

any costs incurred by PMGAA in removing and storing any aircraft, at PMGAA's sole discretion, and as provided herein in performing authorized maintenance on its aircraft on the Airport.

7.3 Sound and Noise Suppression. CARRIER shall comply fully with PMGAA rules and requirements when performing high-speed engine test operations at the Airport, if any, and Section 10.3 to mitigate excessive ambient sound and/or noise that may be generated incident thereto and that have or may have an adverse effect on other Airport tenant operations and the surrounding community. CARRIER acknowledges and agrees that said rules and requirements for such test operations may change from time to time at PMGAA's sole and absolute discretion. CARRIER also agrees that any costs associated with compliance with PMGAA's rules and requirements for sound or noise suppression or mitigation shall be borne solely by CARRIER.

8. ENVIRONMENTAL COMPLIANCE.

CARRIER shall at all times during the existence of this Agreement promptly observe and comply with applicable Federal, State, and local laws, regulations, rules and standards concerning the environment (collectively, the "Environmental Laws"). CARRIER shall be responsible for collecting, storing, recycling and/or disposing of its hazardous or toxic waste, if any, in compliance with the Environmental Laws governing the storage and disposal of hazardous or toxic waste. CARRIER shall ensure its employees and agents are aware that domestic drains, storm drains, or industrial waste drains shall not be used to dispose of gasoline, hydraulic fluid, solvents, concentrated cleaning agents or any other hazardous or toxic materials. Where so required, PMGAA may act on behalf of CARRIER, as and if appropriate, to dispose of CARRIER's waste, sign manifests on behalf of CARRIER and assign such disposal to CARRIER's EPA identification (ID) number. CARRIER shall repay PMGAA the costs and fees for doing so within TEN (10) days of demand therefor. CARRIER shall, to the fullest extent permitted by law, indemnify, defend and hold PMGAA, its members, board of directors, officers, agents, officials, employees, and contractors harmless from and against any and all claims, costs, loss, liability, actions, suits, proceedings, damage or expense including, but not limited to, the costs of suit and reasonable attorneys' fees and expenses of any nature whatsoever arising out of or related to CARRIER's failure to comply with the Environmental Laws.

9. TAXES AND RELATED IMPOSITIONS.

In the event any governmental authority shall impose a tax or imposition based upon this Agreement, upon CARRIER or its aircraft, or upon payments to be made hereunder, CARRIER shall pay such amounts either to PMGAA or the appropriate governmental authority on or before any delinquency date. Specifically, CARRIER shall be responsible for any transaction privilege, sales, excise or other similar tax except income taxes as a result of this Agreement. CARRIER shall also pay all licensing or permitting fees necessary or required by law for the conduct of its aeronautical operations hereunder, or any other matters hereunder. CARRIER shall be responsible for any property interests created hereunder, which may constitute or be deemed to be a possessory interest for purposes of taxation.

10. RULES, REGULATIONS AND MINIMUM STANDARDS.

10.1 CARRIER shall at all times comply with all federal, State and local laws and ordinances, rules and regulations, which are applicable to its operations, or the operation, management, maintenance, or administration of the Airport, including but not limited to the Americans with Disabilities Act, and all laws, ordinances, rules and regulations adopted after the Effective Date. CARRIER shall at all times comply with Airport Rules and Regulations, and Airport Minimum Standards established by PMGAA regarding operation and maintenance of the Airport, copies of which are attached as **EXHIBIT B** and are incorporated herein. CARRIER will be responsible for controlling and preventing disruptive pedestrian and vehicle traffic, if any, associated with its activities on the Airport. CARRIER also shall display or provide copies to PMGAA of any permits, licenses, or other evidence of compliance with laws upon request.

10.2 PMGAA shall operate the Airport in compliance with all applicable Federal state and local laws, ordinances, rules and regulations, and shall enforce the Airport Rules and Regulations established by it to ensure the effective and orderly operation of the Airport, and to prevent

any disruption caused by CARRIER's operations at and on the Airport.

10.3 CARRIER acknowledges receipt of and agrees to abide by PMGAA's *Fly Friendly* noise abatement procedures and will provide such information to flight crews and/or students, post the information in CARRIER's flight planning area, and use the procedures to the extent possible when consistent with safety and air traffic control directives.

11. DEFAULT: TERMINATION BY PMGAA

11.1 General Grounds. PMGAA may terminate this Agreement upon the occurrence of any of the following events:

11.1.1 Failure of CARRIER to perform any of its obligations under this Agreement, or any other contract, license or agreement between the Parties, which failure shall not be cured within FIVE (5) business days after delivery by PMGAA **to** CARRIER of a written notice of such failure.

11.1.2 The filing of any lien against the Airport because of any act or omission of CARRIER which is not discharged within FIVE (5) business days of receipt of actual notice of such lien by CARRIER.

CARRIER may terminate this Agreement upon the occurrence of any of the following events:

11.1.3 Failure of PMGAA to perform any of its obligations under this Agreement, or any other contract, license or agreement between the Parties, which failure shall not be cured within FIVE (5) business days after delivery by CARRIER **to** PMGAA of a written notice of such failure.

11.1.4 The filing of any lien against the Airport because of any act or omission of PMGAA which is not discharged within FIVE (5) business days of receipt of actual notice of such lien by PMGAA.

11.2 Failure to Pay Fees. PMGAA may declare CARRIER in default of this Agreement by giving CARRIER FIVE (5) business day's written notice of CARRIER's failure to timely pay any fees or payments due pursuant to this Agreement. If CARRIER fails to cure such payment default within said FIVE (5) business day period, PMGAA may, in its sole discretion, elect to do any one or more than one of the following:

11.2.1 Institute action(s) to enforce this Agreement; or

11.2.2 Terminate this Agreement automatically without further notice to CARRIER; or

11.2.3 Exercise any other remedy allowed by law or equity.

11.3 Failure to Provide Insurance. In the event CARRIER at any time fails to maintain all insurance coverage required by this Agreement, PMGAA shall have the right, upon written notice to CARRIER, **to** immediately terminate this Agreement or secure the required insurance at CARRIER's expense.

11.4 No Waiver by PMGAA. No waiver by PMGAA of any default by CARRIER in the performance of its obligations under this Agreement shall be deemed to be a waiver of any subsequent default by CARRIER in the performance of any such obligations.

12. GOVERNING LAW; ATTORNEY'S FEES.

The laws of the State of Arizona shall govern this Agreement and the matters set forth therein, without regard to its conflict of law principles. Venue of any action brought under this Agreement shall, at the option of PMGAA, lie in Maricopa County, Arizona. In the event of any litigation or arbitration between PMGAA and CARRIER arising under this Agreement, the successful party shall be entitled to recover its attorney's fees,

expert witness fees and other costs incurred in connection with such litigation or arbitration.

13. NONWAIVER.

PMGAA's right to revoke this Agreement shall be absolute. Any election by PMGAA to not enforce any provision of this Agreement, or any failure by PMGAA to exercise any of the remedies allowed PMGAA under this Agreement, shall not operate as a waiver by PMGAA of any of its right hereunder.

14. ASSIGNMENT.

CARRIER shall not assign or transfer any right or interest in this Agreement.

15. OTHER RESTRICTIONS.

CARRIER shall comply with all rules, laws, ordinances, and statues of any governmental authority having jurisdiction over the Airport or the matters provided in this Agreement.

16. AIRPORT SECURITY.

PMGAA maintains an approved Airport Security Plan (the "Security Plan") pursuant to 49 CFR Parts 1540 and 1542. CARRIER shall at all times comply with the Security Plan and the written and verbal directives issued by PMGAA supporting the Security Plan.

16.1 The CARRIER shall immediately correct physical or procedural deficiencies which are contrary to the Security Plan, security directives, security bulletins, or verbal notifications existing now or in the future. CARRIER is responsible for maintaining security practices, facilities, and perimeter boundaries on their leasehold that meet the security standards of the Security Plan.

16.2 CARRIER shall, to the fullest extent permitted by law, indemnify, defend, and hold PMGAA harmless for, from, and against any violations of the Security Plan committed by any agents, employees, invitees, subcontractors, or independent contractors of the CARRIER.

16.3 CARRIER shall conduct and document all self-audits and self-inspections as required by the Transportation Security Administration ("TSA") or PMGAA and make such audits available for inspection.

16.4 CARRIER shall designate a primary security coordinator to receive security -related briefings, bulletins, and sensitive security information ("SSI").

16.5 PMGAA reserves the right to modify the Security Plan from time-to-time, as necessary, or as directed by the TSA.

17. AIRPORT SECURITY BADGE

17.1 Carrier employees/contractors that require a badge shall be obligated to complete all training and comply with all security requirements and directives issued by PMGAA, TSA, or other entities having jurisdiction at PMGAA.

17.2 CARRIER and employees/contractors shall comply with all security-related audits, inspection, and screenings conducted by PMGAA.

17.3 CARRIER will immediately notify PMGAA and promptly return badges to the Airport Badging Office when badge holders terminate employment, the badge is no longer needed, or the employee/contractor is on extended leave.

17.4 Misuse of a badge or security procedures will bring about punitive action including suspension or revocation of one or all badges.

18. NOTICE.

18.1 All notices required or permitted under this Agreement shall not be deemed effective unless personally delivered or mailed by certified mail, return receipt requested, postage prepaid, or by reputable commercial overnight courier service, to the following addresses:

TO PMGAA:	Phoenix-Mesa Gateway Airport Authority Attn.: Business Development Department 5835 S. Sossaman Road Mesa, Arizona 85212-0614
TO CARRIER:	TEM Enterprises Attn: Head of Strategy and Planning 3262 Westheimer Road #879 Houston, TX 77098

18.2 Notices shall be deemed to have been received TWO (2) business days after the date of mailing, if given by certified mail, or upon actual receipt if personally delivered or if given by reputable commercial overnight courier service. Any Party may designate in writing a different address for notice purposes pursuant to this SECTION.

19. PRIOR AGREEMENTS AND PERMITS.

Upon execution hereof, this Agreement shall supersede and cancel any prior agreements between PMGAA and CARRIER with respect to the business activities governed hereby. CARRIER shall not construe PMGAA's execution of this Agreement as a waiver of any prior indebtedness or obligation to PMGAA under any prior agreement or license, nor does PMGAA waive any claim or cause of action arising therefrom.

20. CORPORATE AUTHORIZATION.

In executing this Agreement, CARRIER represents and warrants to PMGAA that if CARRIER is a corporation, CARRIER has obtained and been granted the full right, power and authority to enter into this Agreement.

21. MISCELLANEOUS.

21.1 Personal Liability. No member of or employee of either Party shall be charged personally or held contractually liable by or to the other Party under any term or provision of this Agreement because of any breach thereof or because of its execution or attempted execution.

21.2 No Waiver. No provision of this Agreement may be waived or modified except by a writing signed by the Party against whom such waiver or modification is sought.

21.3 Non-Waiver of Rights. No waiver or default by PMGAA of any of the terms, conditions, covenants or agreements hereof to be performed, kept or observed by CARRIER shall be construed or act as a waiver of any subsequent default of any of the terms, covenants, conditions or agreements herein contained to be performed, kept or observed by CARRIER, and PMGAA shall not be restricted from later enforcing any of the terms and conditions of this Agreement.

21.4 Amendment. Only a written instrument executed by the Parties may amend this Agreement.

21.5 Invalid Provisions. Should any provision of this Agreement or any application thereof be held invalid by a court of competent jurisdiction, the remainder of this Agreement shall not be affected thereby, unless one or both Parties would be substantially and materially prejudiced.

21.6 Headings. The headings contained herein are for convenience in reference only and are not intended to define or limit the scope of this Agreement or any term thereof.

21.7 Entire Agreement. This Agreement, including **EXHIBITS** attached hereto at the time of its execution, constitutes the entire agreement between the Parties hereto and supersedes all prior negotiations, understandings and agreements between the Parties concerning such matters.

22. INCORPORATION OF RECITALS.

The recitals set forth above are acknowledged by the Parties to be true and correct and are incorporated herein by this reference.

IN WITNESS WHEREOF, the Parties have executed this Agreement to be effective on the Effective Date specified above.

FOR PMGAA:	FOR CARRIER:
_____	_____
By: J. Brian O'Neill, A.A.E.	By: Robert Ashcroft
Its: Executive Director/CEO	Its: Head of Strategy & Planning
Date Signed: _____	Date Signed: March 1, 2021

EXHIBIT A

Airport Rates & Charges

https://www.gatewayairport.com/Documents/DocumentLibrary/Board%20Policies/Approved%20Airport%20Rates%20and%20Charges%20(Res.%2020-15)%20effective%204-1-2020.pdf?Uniqueifier=7DoEqdrdPa

Airport Fees, Services, and Rental Rates

https://www.gatewayairport.com/Documents/DocumentLibrary/ExecDirSect/Airport%20Fees,%20Services%20and%20Rental%20Rates%20-%20Effective%204-1-2020.pdf?Uniqueifier=a6EP8eHQOK

EXHIBIT B

PMGAA Minimum Standards

https://www.gatewayairport.com/Documents/DocumentLibrary/Board%20Policies/Airport%20Minimum%20Standards.pdf?Uniqueifier=7DoEqdrdPa

PMGAA Rules & Regulations

https://www.gatewayairport.com/Documents/DocumentLibrary/Board%20Policies/Approved_Rules%20and%20Regulations_20-08.pdf?Uniqueifier=7DoEqdrdPa

EXHIBIT C

Exclusive Use Space and Fees:

Ticketing Terminal Suite #202 (116 SF)	$34.00 / SF	$328.66/ mth plus tax

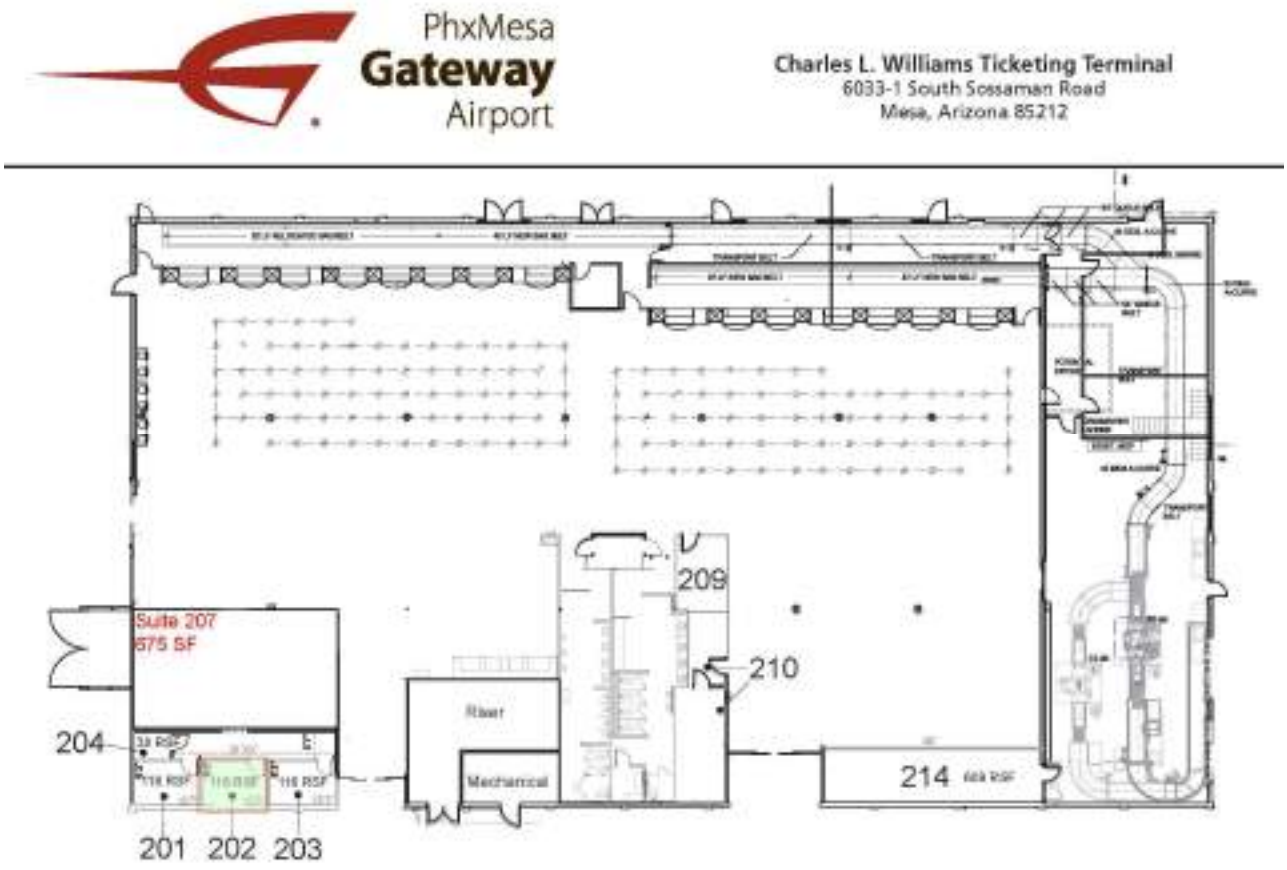

Office Trailer Located on Ramp	$328.66 / mth plus tax

Phoenix-Mesa Gateway Airport Authority
5835 S Sossaman Road
Mesa, Arizona 85212-6014
www.gatewayairport.com

Management Information Report

To: Board of Directors
From: Chuck Odom, Chief Financial Officer
Through: J. Brian O'Neill, A.A.E., Executive Director/CEO
Re: February 2021 Financials
Date: April 20, 2021

Attached is the monthly Financials Report for February 2021.

Phoenix-Mesa Gateway Airport Authority
AIRPORT - All Operations P&L
February, 2021

	Month of February, 2021				Y-T-D as of February, 2021			
	Feb FY20 Actual	Feb FY21 Actual	YOY Variance	B/(W)	YTD FY20 Actual	YTD FY21 Actual	Y-T-D Variance	B/(W)
Aeronautical Operating Revenues								
Aircraft Parking	18,434	21,028	2,594	14%	139,723	152,304	12,581	9%
Fuel Flowage Fees	60,581	52,014	(8,567)	-14%	437,356	462,113	24,757	6%
Landing Fees	125,677	101,933	(23,744)	-19%	873,081	885,274	12,193	1%
Lease Income Aero	193,876	203,838	9,962	5%	2,122,880	1,794,471	(328,409)	-15%
Fuel Sales	564,488	463,582	(100,906)	-18%	4,341,208	3,491,501	(849,707)	-20%
Services Sold - Aero	465,265	403,085	(62,180)	-13%	3,316,937	3,833,082	516,145	16%
Sub-total Aero Operating Revenues	1,428,321	1,245,480	(182,841)	-13%	11,231,185	10,618,745	(612,440)	-5.5%
Non-Aeronautical Operating Revenues								
Concessions	112,230	58,489	(53,741)	-48%	585,655	413,182	(172,473)	-29%
Lease Income Non-Aero	100,343	106,579	6,236	6%	795,118	850,696	55,578	7%
Parking	224,004	138,427	(85,577)	-38%	2,547,325	1,659,668	(887,657)	-35%
Rental Car Fees	297,412	164,215	(133,197)	-45%	1,289,515	738,884	(550,631)	-43%
Svcs Sold - Non Aero	4,763	7,244	2,481	52%	57,153	34,574	(22,579)	-40%
Sub-total Non-Aero Operating Revenues	738,752	474,954	(263,798)	-36%	5,274,766	3,697,004	(1,577,762)	-30%
Total Operating Revenues	**2,167,073**	**1,720,434**	**(446,639)**	**-21%**	**16,505,951**	**14,315,749**	**(2,190,202)**	**-13%**
Operating Expenses								
Costs of Goods Sold	365,879	266,822	99,057	27%	2,629,136	1,895,837	733,299	28%
Personnel	877,127	704,398	172,729	20%	6,081,795	5,765,931	315,864	5%
Comm & Utilities	70,437	51,079	19,358	27%	584,209	574,779	9,430	2%
Contractual Services	586,434	360,076	226,358	39%	3,225,709	3,111,367	114,342	4%
Insurance	43,158	42,526	632	1%	346,425	362,849	(16,424)	-5%
Other	17,767	10,559	7,208	41%	253,896	97,941	155,955	61%
Repair & Maintenance	63,453	75,231	(11,778)	-19%	368,997	327,468	41,529	11%
Supplies & Materials	88,179	43,552	44,627	51%	687,913	498,503	189,410	28%
Air Service Incentives [2,000,000]	0	0	0	0	0	0	0	0
Operating Contingency [2,313,872]	0	0	0	0	0	0	0	0
Total Operating Expenses	**2,112,434**	**1,554,243**	**558,191**	26%	**14,178,080**	**12,634,675**	**1,543,405**	11%
Operating Income (Loss)	**54,639**	**166,191**	**111,552**	204%	**2,327,871**	**1,681,074**	**(646,797)**	-28%
	2.5%	9.7%			14.1%	11.7%		
Depreciation		1,381,115				11,408,047		
CARES Act Recovery		1,180,479				9,965,012		
Total-to-date CARES Act Recovery		17,875,411						

Phoenix-Mesa Gateway Airport Authority
5835 S Sossaman Road
Mesa, Arizona 85212-6014
www.gatewayairport.com

Management Information Report

To: **Board of Directors**
From: **Chuck Odom, Chief Financial Officer**
Through: **J. Brian O'Neill, A.A.E., Executive Director/CEO**
Re: Solicitation Notification
Date: **March 17, 2021**

This report is to provide notification of the active and upcoming solicitations to help ensure compliance with the Phoenix-Mesa Gateway Airport Authority procurement transparency clause. The active activities include the following:

Active/Pending Solicitations

Type Solicitation	Number	Title	Anticipated Contract Award (Board Action)
Request for Qualifications	2021-016-RFQ	Master Developer, Gateway*East*	List Creation
Request for Proposals	2021-021-RFP	Janitorial Services	July 2021

Future Solicitations

Type Solicitation	Number	Title	Scheduled for Release	Anticipated Contract Award (Board Action)
Invitation for Bid	2021-022-IFB	ATC Communication Radios	April 2021	June 2021
Request for Qualifications	2021-023-RFQ	Fabrication and Installation of Signs	April 2021	June 2021
Invitation for Bid	2021-017-IFB	Alpha Apron Expansion Phase III	May 2021	July 2021
Invitation for Bid	2021-025-IFB	Taxiway W Rehabilitation	May 2021	July 2021
Request for Proposals	2021-019-RFP	Master Developer, Gateway*East*	May 2021	October 2021

Equipment Disposals

Fiscal year totals from sales of decommissioned / nonworking equipment total $22,999.

If you have any questions about the solicitations or the procurement process, please feel free to contact me at 480-988-7613.

Phoenix-Mesa Gateway Airport Authority
5835 S Sossaman Road
Mesa, Arizona 85212-6014
www.gatewayairport.com

Management Information Report

To: **Board of Directors**
From: **J. Brian O'Neill, A.A.E., Executive Director/CEO**
Re: **Weighted Voting Rights Related to the Amended and Restated Joint Powers Airport Authority Agreement**
Date: **April 20, 2021**

The Voting Rights (Section 8) of the Phoenix-Mesa Gateway Airport Authority Amended and Restated Joint Powers Airport Authority Agreement (Agreement) defines Member Government (Member) voting rights and weighted voting rights. Per the Agreement, each Member is entitled to a weighted vote equal to that Member's *cumulative investment* as a percentage of the total investment made by all current Members since 1993.

When utilizing a weighted vote, should any one Member's weighted vote calculated under the Voting Rights Section exceed 50%, then the weighted vote for that Member shall be deemed equal to the sum of the weighted vote of all the other Members combined. However, the weighted votes of all the Members combined must be adjusted so that the total weighted vote calculation equals 100%. As an example, if a Member's weighted vote is calculated at 68%, that Member's weighted vote would then be deemed to be 50%, with the remaining Members holding a proportionate share of the remaining 50% of the total weighted vote.

Based on the above criteria, the weighted vote calculation for fiscal year 2022 is as follows:

Member Government	Unweighted	Weighted
City of Mesa	65.37%	50.00%
City of Phoenix	16.95%	24.47%
Gila River Indian Community	7.91%	11.41%
Town of Gilbert	6.78%	9.79%
Town of Queen Creek	1.96%	2.83%
City of Apache Junction	1.03%	1.49%
Total	**100.00%**	**100.00%**

NOTICE AND AGENDA OF MEETING OF THE
PHOENIX-MESA GATEWAY AIRPORT AUTHORITY
BOARD OF DIRECTORS

Pursuant to A.R.S. § 38-431.02, notice is hereby given to the members of the Phoenix-Mesa Gateway Airport Authority and to the public that the Phoenix-Mesa Gateway Airport Authority will hold a meeting open to the public on **Tuesday, May 18, 2021 beginning at 9:00 a.m.** in the Board Room (Saguaro A & B) of the Gateway Administration Building, 5835 South Sossaman Road, Mesa, Arizona. Members of the Phoenix-Mesa Gateway Airport Authority may attend either in person or by telephone. The Board may vote to hold an executive session for the purpose of obtaining legal advice from the Board's attorney on any matter listed on the agenda pursuant to A.R.S. § 38-431.03 (A)(3)&(4).

The agenda for the meeting is as follows:

1. **Call to Order** (Mayor Gail Barney, Chair)
   Members of the Phoenix-Mesa Gateway Airport Authority will attend either in person or via videoconference.

2. **Roll Call** (Mayor Gail Barney, Chair)

3. **Pledge of Allegiance**

4. **Call to the Public**
   Members of the Board may not discuss items that are not on the agenda. Therefore, action taken as a result of public comment will be limited to directing staff to study the matter or scheduling the matter for further consideration and decision at a later date. Maximum of three minutes per speaker.

5. **Executive Director's Report** - J. Brian O'Neill, A.A.E., Executive Director/CEO

6. **SkyBridge Annual Report** – Will Moseley, General Manager – Mesa SkyBridge, LLC

7. **Consent Agenda**

   a) **Minutes** of the Board Meeting held on April 20, 2021.

   b) **Resolution No. 21-13 –** Approval of the amended and restated **Phoenix-Mesa Gateway Airport Authority Personnel Rules**.

   c) **Resolution No. 21-14 –** Authorizing a 5-year contract with **Amadeus Airport IT Americas, Inc.** (Amadeus) for airport common use system Software and Maintenance in an amount not to exceed $246,381.48 for three years with (2) one year renewal options not to exceed $87,103.34 and $89,716.43 each year respectively.

Consideration and Possible Approval of:

8. **Resolution No. 21-15 –** Authorizing the **extinguishment of the 16.69-acre perpetual easement** in exchange for fair market consideration of $500,000.00, subject to the issuance of an Instrument of Release from the FAA.

9. **Board Member Comments/Announcements**

10. **Next Meeting: Tuesday, June 15, 2021 at 9:00 a.m.**

11. Adjournment

Persons with a disability may request a reasonable accommodation, such as a sign language interpreter, by contacting Misty Johnson at 480-988-7607 or mrjohnson@gatewayairport.com. Requests should be made as early as possible to allow time to arrange the accommodation.

Phoenix-Mesa Gateway Airport

Executive Director's Report

May 2021

Financial Snapshot

OPERATING INCOME	March		Month Variance	FYTD Comparison		FYTD Variance
	FY20	FY21		FY20	FY21	
Revenues	$1,969,334	$2,040,061	$70,727	$18,475,285	$16,355,805	($2,119,480)
Less Expenses	$1,802,250	$1,626,991	($175,259)	$15,980,957	$14,261,664	($1,719,293)
Operating Income *(before depreciation)*	**$167,084**	**$413,070**	**$245,986**	**$2,494,328**	**$2,094,141**	**($400,187)**

Investment Fund Balances: As of March, Local Governmental Investment Pool (LGIP) 700 = $19,043,451; Wells Fargo; Collateralized Money Market = $7,370,973 and Collateralized CD's = $28,315,413; Total $54,729,837. PMGAA investments lost value by a net of ($13,404), due to a market value adjustment of ($10,138) in the LGIP and interest losses of ($3,266) in the Wells Fargo Accounts.

Finance and Accounting

In March 2021, the Phoenix-Mesa Gateway Airport Authority (PMGAA, Authority) reported a net operating income of $413,070 and fiscal-year-to-date 2021 (FYTD21) net operating income of $2,094,141. The March 2021 monthly results were strong, $245,986 more than the March 2020 results. Operating expenses are $1,719,293 less than last FYTD. PMGAA's fiscal restraint has comparatively contributed 82% of the current FYTD operating results.

Aeronautical operating revenues for FYTD21 are down 3.5% when compared to FYTD20 results and non-aeronautical operating revenues have decreased by 28%, for a combined ($2,119,480).

Actual operating expenditures are consistently 11% lower than actual operating expenditures from the prior fiscal year.

Through the end of March, PMGAA has submitted a total of $19,077,607 for CARES Act operating grant reimbursements, which are not reflected in the operating results.

PMGAA Solicitations

Active/Pending Solicitations

TYPE OF SOLICITATION	Number	Title	Anticipated Contract Award
Request for Qualifications	2021-016-RFQ	Master Developer for Gateway***East***	Short List Created
Request for Proposals	2021-021-RFP	Janitorial Services	July 2021
Invitation for Bid	2021-022-IFB	ATC Communication Radios	June 2021
Request for Qualifications	2021-027-RFQ	Terminal Annex Replacement Design Services	July 2021

Future Solicitations

TYPE OF SOLICITATION	Number	Title	Scheduled for Release
Request for Qualifications	2021-023-RFQ	Fabrication & Installation of Signs	June 2021
Invitation for Bid	2021-025-IFB	Taxiway W Rehabilitation	May 2021
Invitation for Bid	2021-017-IFB	Alpha Apron Expansion Phase III	May 2021
Request for Proposals	2021-019-RFP	Master Developer for Gateway***East***	May 2021

Airport Operations

Welcome Avelo Airlines!

Avelo aircraft getting water cannon salute

Avelo Airlines, a new ultra-low-cost commercial air carrier, began operations at Phoenix-Mesa Gateway Airport (Airport, Gateway Airport) on May 3rd with its inaugural roundtrip flight between Mesa and the airline's hub in Burbank, CA. Avelo's Chairman and CEO Andrew Levy was onboard the Boeing 737-800 aircraft as it touched down at Gateway Airport to a customary water cannon salute. Introductory one-way fares as low as $19 make Avelo's new daily service a convenient and very cost-effective way to transit between greater Phoenix and the LA area. For more information, or to book your upcoming flight, please visit www.aveloair.com. Welcome to the Gateway Airport family Avelo Airlines!

avelo AIRLINES NEW NONSTOP FLIGHTS AZA→BUR

Passenger Channelization Project has Big Benefits

Gone is the random assortment of broken bicycle fence, caution tape, rope and stanchion, and orange cones that used to litter the commercial passenger terminal ramp at Gateway Airport. The Airport's new passenger channelization project greatly improves customer safety, pedestrian traffic flow, and offers a much better first, and last, impression of the Airport and the region. Uniform concrete barriers safely and efficiently direct air travelers between the terminal and their aircraft.

Passenger Channelization for Gate 1

Trego-Dugan Aviation Begins Operations at Gateway Airport

Gateway Airport has a new third party ground handler providing "above and below wing" services for the Airport's growing number of commercial passenger airlines. Trego-Dugan Aviation has been in the aviation services business for 50 years, initially operating a single fixed base operator (FBO) with eight employees and now performing numerous aviation disciplines nationwide with 550 dedicated team members. Trego-Dugan is providing ground handling services for Avelo Airlines' daily nonstop flight to Burbank, CA.

PMGAA Team Member Spotlight

Employee Name: Janice Parks
Employee Title: Materials Specialist
PMGAA Department: Operations and Maintenance
Years with PMGAA: 27+ (PMGAA's most tenured employee)

PMGAA's Janice Parks

What are your job responsibilities for PMGAA? I am responsible for maintaining Airport inventory, receiving deliveries, ordering parts, and reuniting customers with their lost & found items.

What is your most memorable Gateway Airport moment? In 2007, when one of the former U.S. Air Force base buildings was transformed into the first commercial passenger terminal.

What is something people may not know about you? I worked in the Air Force Base hospital for 10 years before transitioning to the Airport Authority.

Operations Statistics

PASSENGER COUNTS		March		% Change	FYTD		% Change
		FY20	FY21		FY20	FY21	
Passengers	TOTAL	**144,773**	**164,453**	**14%**	**1,275,698**	**873,532**	**-32%**
	Deplaned	64,235	83,005	29%	642,572	447,535	-30%
	Enplaned	80,538	81,448	1%	633,126	425,997	-33%
Allegiant	Scheduled	139,500	162,907	17%	1,242,403	869,855	-30%
WestJet	Scheduled	1,370	0	-100%	8,763	0	-100%
Swoop	Scheduled	3,903	0	-100%	23,892	1,698	-93%
Elite/Swift	Charter	0	1,546	100%	640	1,979	209%

OPERATIONS	March		% Change	FYTD		% Change
	FY20	FY21		FY20	FY21	
Air Carrier	1,472	1,653	12%	10,016	9,105	-9%
Military	184	452	146%	2,503	2,964	18%
General Aviation	20,262	22,073	9%	206,817	185,122	-10%
TOTAL	**21,918**	**24,178**	**10%**	**219,336**	**197,191**	**-10%**

Engineering and Planning

New Air Traffic Control Tower Taking Shape!

Construction crews are hard at work assembling the precast concrete panel exterior of Gateway Airport's new air traffic control tower (ATCT, Tower). The new Tower will be 55% taller than the Airport's existing facility and its cab will be twice as big with eight controller positions.

Gateway Airport's new ATCT was made possible by strong support from Arizona's Congressional Delegation, PMGAA's Board of Directors, and an approximately $30 million grant from the Federal Aviation Administration (FAA). The new Tower will be completed in the summer of 2022. Many thanks to everyone that helped make this project a reality.

Precast exterior panels being erected for new ATCT

Gateway Aviation Services

During the month of March 2021, Gateway Aviation Services, the PMGAA-operated FBO, pumped more than 2MM gallons of aviation fuel, representing a 27% increase compared to March 2020 when the COVID-19 pandemic began halfway through the month. YTDFY21, the total gallons of aviation fuel pumped is comparable with the same time period last fiscal year.

FUEL (Gallons)	March			FYTD		
	FY20	FY21	% Change	FY20	FY21	% Change
AvGas	59,089	53,209	-10%	543,344	481,828	-11%
Retail Jet A	35,729	45,669	28%	380,034	347,293	-9%
Contract	260,813	342,203	31%	3,032,479	3,334,964	10%
Commercial	1,360,341	1,738,666	28%	10,479,324	10,218,100	-2%
TOTAL	1,715,972	2,179,747	27%	14,435,181	14,382,185	0%

Community Noise Report

During the month of March 2021, PMGAA received aircraft noise calls from a total of 20 area residents. The same number of callers (20) contacted the Airport about aircraft noise in March 2020. PMGAA Community Relations Manager Brian Sexton does a nice job communicating with callers to help answer their questions, explain the various arrival and departure flight patterns and pilot training practice areas, and investigate specific flight activity that may be of concern to them depending on where in the Phoenix East Valley they may live. Gateway Airport tries to be a good neighbor, be transparent, and provide timely communication with residents of the surrounding communities. It is an important part of our ongoing Community Relations Program. Thanks for all that you do for the area residents Brian!

CALLERS	March		FYTD	
	FY20	FY21	FY20	FY21
Total	20	20	132	137

AIRCRAFT TYPE	March		FYTD	
	FY20	FY21	FY20	FY21
	Callers	Callers	Callers	Callers
Commercial	17	9	100	62
GA Total	2	5	13	30
Helicopter	0	5	4	30
Military	1	1	15	15
Total	20	20	132	137

LOCATION	March		FYTD	
	FY20	FY21	FY20	FY21
Mesa	12	6	64	43
Gilbert	6	6	49	49
Gold Canyon	1	1	1	12
Queen Creek	0	4	7	18
Queen Valley	0	1	5	8
San Tan Valley	1	1	4	1
Apache Junction	0	0	2	0
Chandler	0	1	0	6
TOTAL	20	20	132	137

Business Development

Gateway Executive Airpark Complex is Permitted and Under Construction

New hangar complex under construction at Gateway Airport

The new 183,000 sq. ft. state-of-the-art, full-service hangar complex called **Gateway Executive Airpark** has received all its necessary permits from the City of Mesa and is currently under construction. Located between Textron Aviation's Mesa Service Center and Embraer's Executive Jet Service Center on the north end of Gateway Airport's expansive airfield, this exciting private development project includes both multi-tenant and freestanding private hangar opportunities with hangar door dimensions that will accommodate larger jets or multiple smaller aircraft and helicopters.

Aviation Performance Solutions (APS) Opens New Corporate Headquarters at Gateway Airport

Aviation Performance Solutions (APS), a long-time tenant at Gateway Airport and important aircraft upset recovery training provider, has just opened a beautiful new 65,000 sq ft corporate headquarters/hangar facility on the north end of the airfield. APS built a large hangar for use in their operation and a second large hangar available for lease. Call APS if interested.

APS's New Corporate Headquarters

Marketing and Community Relations

Sun Country Airlines Announces New Service at Gateway Airport

A Sun Country Airlines Boeing 737-800 aircraft

Great News! A leading ultra-low-cost airline, Sun Country Airlines, recently announced that it will begin seasonal nonstop service between Gateway Airport and its hub in Minneapolis this November. The greater Phoenix region is a popular tourist destination for residents of the Twin Cities, other areas of Minnesota, and the entire upper Midwest. Those areas are also frequented by Valley residents looking to visit family and friends for the holidays. For flight schedules or to make a reservation, please visit www.suncountry.com. PMGAA would like to welcome Sun Country Airlines to the family.

City of Phoenix Appoints New PMGAA Board Member

Councilmember Jim Waring

City of Phoenix Mayor Kate Gallego has appointed District 2 Councilmember Jim Waring to replace outgoing District 1 Councilmember Thelda Williams on the PMGAA Board of Directors. Councilmember Waring has served on the Phoenix City Council since 2011 and previously served in the Arizona State Senate for seven years. Councilmember Waring holds a Ph.D. in public administration from Arizona State University.

PMGAA welcomes Councilmember Waring to the Board and looks forward to working with him and other City staff as we continue the strategic development of the Airport and address important aviation-related issues facing Gateway Airport, Phoenix Sky Harbor International Airport, and commercial passenger airports nationwide.

U.S. Department of Homeland Security Extends Enforcement Date for REAL ID

The U.S. Department of Homeland Security recently announced that the full enforcement date for the federally mandated Real ID Program will be extended once again from October 1, 2021 to May 3, 2023 due to circumstances resulting from the ongoing COVID-19 pandemic.

The Real ID Act of 2005, enacted May 11, 2005, is an Act of Congress that modifies U.S. federal law pertaining to security, authentication, and issuance procedure standards for drivers' licenses and identity documents, as well as various immigration issues pertaining to terrorism.

SkyBridge Arizona Annual Report 2020

MARCH 31, 2021

Submitted by:
Felipe Monroy Torres
Will Moseley

Mesa Skybridge LLC Annual Report

Prepared for: Phoenix-Mesa Gateway Airport Authority

SkyBridge Arizona is pleased to submit our Annual Report for the time period of April 1, 2020 to March 31, 2021 to the Phoenix-Mesa Gateway Airport Authority in accordance with the Master Development Agreement between PMGAA and Mesa Skybridge LLC.

I. Prior Year Activity

SkyBridge Arizona has continued to progress in 2020, in spite of the challenges dealt by the pandemic and associated concerns and societal impacts. The two projects commenced in 2019, Lots 106 and 107, have been completed and have come on-line with active leasing progress by CBRE. Lot 107, the Hangar Property, has one lease currently, and an LOI in progress for two other bays by a different user. Lot 106, the Light Industrial Property, has two active LOI's being negotiated with full-building users, which is indicative of the region's market and the competitive nature of users wanting to be in the East Valley and Airport-adjacent. The Master Plan remains generally intact as previously presented and approved by the PMGAA, and Skybridge has had continued active tenant pursuits for users of both Aeronautical and non-Aeronautical parcels. Documented development activity includes:

- On March 27, 2020, the FAA issued the Finding of No Significant Impact on the largest portion (350+ acres) of the SkyBridge Arizona development. This allowed the design of the Horizontal Infrastructure to be awarded, and that design is in progress at this time. One parcel remains outside of the FONSI – Parcel F-1 – and the Airport is actively tracking the status with the Air Force. SkyBridge Arizona has placed the Pollution Liability Policy as per the Master Lease Agreement, for a term of ten (10) years.
- Lot 106, the Light Industrial Property, was delivered to SkyB Lot 1 Corp on approximately May 1, 2020, with a Certificate of Occupancy, and is currently under terms of an LOI with a Tenant, with leases to be under review in the very near future. Required insurance coverages were placed by the Owner and presented to PMGAA.
- Lot 107, the four-bay Hangar Property, was delivered to SkyB Lot 6 Corp as substantially complete and with a Certificate of Compliance from the City of Mesa on December 1, 2020. A Tenant has occupied one-half of Bay 4 in the building, and the Tenant Improvement for the Tenant is to be completed by the first week of April, 2021. Another LOI for two (2) bays is in active negotiation. Required insurance coverages were placed by the Owner and presented to PMGAA.

- Lot 116-A, a dual-branded Hotel by Wyndham, has been under development for the past six months, and is anticipated for the Takedown Package to be presented to the Board at the April Meeting, with the hope of approval to move forward on the Hotel and associated Restaurant Pad immediately after approvals. Design is progressing in the interim, and we anticipate At-Risk Grading permits in May, if not the actual Building Permit from the City of Mesa.
- A Master Plan Amendment will be developed for the remainder of the Lot 116 parcel, now referred to as Lot 116-B, which will have frontage on Sossaman Road and be developed as a complimentary use for the Hotel on 116-A. In advance of said development, an Agreement for the possible need of a future cross-access-easement will be crafted, pending development definition on the 116-B parcel.
- A Master Lease Adjustment Amendment was approved by the PMGAA Board in the March Board Meeting and executed with an effective date of April 1, 2021, removing the West Detention Basin from the SkyBridge Arizona Master Lease. A Declaration Amendment, removing the same from the Covenants, Conditions, and Restrictions will be executed at a later date.

These new projects and milestones were achieved with the active interaction with many local municipalities and Economic Development agencies to ensure that each project and step would be in the best interest of SkyBridge Arizona and the PMGAA. SkyBridge Arizona continues with a phased approach to Horizontal Infrastructure Design, and will be developing phasing schedule(s), conceptual construction budgeting, and cash-flow analyses for presentation to various Lenders and loan structures for the Horizontal Infrastructure. At the same time, SkyBridge Arizona will begin sharing progress design drawings with PMGAA and the City of Mesa to assist in the review process, the specification analysis, and to ease the transfer of the ROW/PUE and Taxilane Lima to those entities upon completion.

The Unified Cargo Processing pilot program continues to be discussed and updated as the pandemic will allow over the year. Zoom discussions have continued to occur with SkyBridge, PMGA, and USCBP, and the USCBP has extended the Pilot Program Status for two 180-day periods in the interim. The Pandemic has adversely affected the SAT participation, from the top of the organization down, but we are hopeful that an on-site

meeting with SAT Leadership will occur within the next 60 days to reenergize the conversations and finalize the program within that organization and move forward with the overall implementation of the Program. Planning still relies upon the Hangar 32 location as the initial location of the operational program for the foreseeable future. Commercial interest in the program remains high in a number of potential tenants and users, and, once active, the Foreign Trade Zone will activate and add to the Skybridge/PMGAA toolkit .

The project continues to be heavily marketed to the business community, locally and nationally, and there has been considerable interest expressed by businesses who are looking to expand and locate at the airport and have access to prime airfield services. Skybridge continues to coordinate with PMGAA for potential tenants and vendors, as well as the Greater Phoenix Economic Council and Arizona Commerce Authority, as well as municipal Economic Development departments in the East Valley.

II. Takedown Status and Development Activity

The 363.5-acre SkyBridge Arizona project consists of three areas: A, B, and C. Area A is 3.2 acres, located on the western side of E. Velocity Way. Area B is 5 acres, located along the north side of S. Downwind Circle. Area C is the remaining area within the project and is 355.3 acres in size. Area A and B have received Categorical Exclusion (CATEX) approval under the National Environmental Policy Act (NEPA). As listed above, both Areas A (52,600 SF Light Industrial Building, Lot 106) and B (82,500 SF Commercial Hanger, Lot 107) have completed the Takedown process and have been delivered to the respective ownership entities for leasing and tenant operations.

Area C includes the remainder of the development area in SkyBridge Arizona. The total land area of Area C is 355.3 acres. Area C will have both non-aeronautical and aeronautical uses. It will also contain R&D offices, hotel, and retail uses. Upon

completion, Area C will provide aprox. 3.68 million square feet of development; aprox. 2.07 million square feet of which will be dedicated to non-aeronautical uses and aprox. 1.33 million square feet dedicated to aeronautical uses. The R&D office and hotel (Parcel "D") and retail portions will make up aprox. 200,000 square feet and aprox. 65,000 square feet, respectively.

Skybridge Arizona has negotiated a deal with Wyndham Hotels for a dual brand hotel on Parcel 116 (in process of modifying that Parcel into 116-A for the Hotel and 116-B for future development) which is consistent with the Master Plan. The Takedown Package is being finalized for consideration by the Board at its April meeting. The hotel will consist of 129 rooms, approximately 65,000 SF in total, with Meeting Space and parking for groups up to 350. Delivery to the market is targeted for Q2 of 2022.

In March, 2020, the FAA issued the Finding of No Significant Impact for Area C of the development, and SkyBridge began design on Horizontal Infrastructure for the overall development. The process is currently forecast as a three-phase delivery of the infrastructure and associated parcels for vertical development. Phase I of the design will include aspects of the infrastructure required for the Hotel Development, as well as the Phase I identified in the following Section III.

III. Master Plan Status Report

The Master Plan Process has been completed and the Plan approved by PMGAA . The Master Plan was used in the FAA EA Process to provide guidance on what will be constructed. The final version has also been shared with stakeholders including Arizona State University, Chandler-Gilbert Community College, the City of Mesa, and the major utilities that serve the area.

The Hotel will require a minor modification to the Master Plan, creating Parcels 116-A and 116-B from the singular Parcel 116, as the Hotel coverage did not require the entire acreage of Parcel 116. Parcel 116-B will be developed in a manner consistent with the Master Plan and uses will be discussed with the Airport as opportunities present.

IV. Park Property Takedown Projection for next 12 Month Period

During the next twelve-month period, the aforementioned Hotel will be well under construction with a targeted delivery in Q2 of 2022. We have updated the Phasing Plan below to reflect those parcels becoming part of Phase I, and the removal of the West Detention Area from the SkyBridge Leasehold as of 04.01.21. The updated initial first Phase of Area C Infrastructure will be developing so that the Parcels in Phase I can start to develop.

SkyBridge would anticipate delivery of Takedown Packages for two industrial buildings, currently described as Lots 108 and 109, as part of the Phase I Vertical Development. We plan on delivering the Takedown Packages in time for the June PMGAA Board Meetings, if not earlier. These buildings are focused on the active East Valley Industrial Market, and the lack of buildings this size currently available to the market.

SkyBridge intends to include the Taxilane Lima Extension as part of the Phase I Horizontal Infrastructure this year, which will create additional airside parcels for development. Toward that end, SkyBridge is developing concepts for a speculative Maintenance & Repair Operation (MRO) Hangar, to appeal to market users that we have interacted with that require a larger hangar type for larger aircraft than can currently be served by the Lot 107 Hangar Project. These users need higher doors and structures for their aircraft and operational needs, and SkyBridge is striving to meet those needs. The final location of this proposed project is still to be determined, but we anticipate that the specifics will be defined this year and the next steps will be established for delivery.

The Plan below reflects the integration of the Hotel Parcel(s) into Phase I and indicates the removal of the West Detention Area from the leasehold.

PHASE	LAND AREA (AC)	LAND DISTRIBUTION	GFA (SF)					TOTAL GFA (SF)	GFA DISTRIBUTION
			Non-Aeronautical Use	Aeronautical Use	Office / R&D *	Retail / Hotel **	Amenity		
Phase 0	8.2	2%	60,000	82,500	-	-	-	142,500	4%
Phase 1	107.0	29%	662,048	186,100	-	-	5,158	865,306	22%
Phase 2	138.5	38%	1,189,313	223,678	200,000	70,000	6,000	1,688,991	44%
Phase 3	109.7	30%	276,046	851,311	-	-	-	1,129,357	30%
GRAND TOTAL	363.5	100%	2,189,407	1,355,589	200,000	70,000	11,158	3,826,154	100%

* Assume 2 story buildings
** Assume 1 story buildings

V. Minimum Development Requirements

In accordance with the Master Development Agreement, there are Minimum Development Requirements that must Occur. Minimum Development Deadline #1 occurs at Year 7 of the MDA.

Minimum Development Deadline	Item No.	Minimum Development Requirements
On or before the seventh (7th) anniversary of the Closing Date ("Minimum Development Deadline #1)	(1)	The Cargo Inspection Program is operational at the Airport.
	(2)	The Developer has completed construction of Taxiway Lima and it has been accepted by the Authority.
	(3)	The Developer has completed construction of Vapor Trail and the same has been accepted by the applicable Government Authorities.
	(4)	The Developer has completed construction and/or reconstruction of Drainage Retention Basins.
	(5)	The Developer, in coordination with the Authority, has completed the necessary environmental clearances for the Horizontal Improvements to be constructed pursuant to the Master Plan to the satisfaction of the FAA.

Currently the requirements to meet Minimum Development Deadline #1 are on schedule to be maintained.

VI. Market Opportunities and Constraints for Next 3 Years

It will come as no surprise that 2020 impacted what was expected of the evolution of the Development in the course of SkyBridge's projections for this year, and we were not alone. The Covid-19 Pandemic, just making itself known a year ago as the 2019 Annual Report was being delivered, has been, and continues to be, a source of uncertainty for our business, the Airport's operations, and the region and State as a whole. That said, our activity and CBRE Research indicates that the Industrial Market, especially in the East Valley, is strong and is projected to maintain that strength through 2021. The Office Market remains an enigma, as firms and businesses struggle to establish protocols and needs for office habitation, and how this will evolve. General Aviation has, in most sectors, continued to indicate growth in fractional ownership, private aviation, and there have been extremely innovative concepts – electric aircraft, vertical take-off – introduced in both start-up and evolution of existing product and manufacturers. The Metro-Phoenix commercial market and population growth and net-migration remain strong, and the outlook is that Covid-19 will become less disruptive and more a manageable challenge.

The 2020 market for Phoenix industrial product has remained strong and continues to be driven by the demand for large distribution buildings from e-commerce tenants to be used for warehousing of their inventories. The East Valley sector is of particular note in both activity and building size. Tech sector growth remains strong, leaning on the solid and available workforce and available land and infrastructure, and supporting industrial users are also driving demand. Recent announcements of existing major semi-conductor firm expansion and additions of other manufacturers to the market only further ratify this outlook. Manufacturing is another sector that has been growing in spite of the pandemic, and indicators of pent-up demand for durable goods due to the pandemic are encouraging. Per CBRE, industrial rents are strong, and will remain so for the foreseeable future. At the time of this writing, CBRE reports that there is over 11M SF of Industrial Product under construction (55 projects), with 13.3 M SF delivered in 2020. Year-over-year, this is only slightly off the pace of the 2019 deliveries.

Coupled with higher tax rates and regulatory pressure, the Covid-19 lockdowns of California businesses has made Arizona an even more viable alternative to industrial users and migrating citizens, enhancing the work force and increasing the need for same. Freeway expansions, including the opening of the 202 South, allowing for the bypass of Central Phoenix by truck traffic, is poised to make supply and distribution from the East Valley even more viable to users. Add to that option the potential air-cargo ease via the Airport, and the East Valley looks to continue to rebound from the effects of the pandemic.

Demand for office space will be a difficult value to track as we enter a post-pandemic world. The pandemic has exposed shortcomings in office design, flow, and usage, and the industry – real estate, design, and construction – has been understandably more reactive than solution-oriented thus far. The previous net-absorption highs have reversed, and negotiations to reduce "footprints" of Tenants is far more prevalent than new leases or expansion plans. While SkyBridge has included some dedicated Office in the Master Plan, we will look to those parcels as "flexible" and work with CBRE and market indicators to establish a compatible use, one that may, or may not, be an office-focused parcel.

CBRE is reporting that in Airport Submarkets, Industrial and Logistics submarkets are commanding up to 13% rent premiums, due to the pressures in the e-commerce markets to shorten delivery times. These third-party logistics operators were the most active occupiers in 2020, and we do not see this changing. This group was followed by general retailers and wholesalers, and direct e-commerce users. An interesting addition is that Food/Beverage companies accounted for 12.5% of leasing in the Airport Submarkets, and we have seen interest at SkyBridge that would confirm that fact.

Of some concern across all markets is the current increase in Construction Costs, in particular lumber, steel, concrete, and PVC-based materials. We are currently monitoring costs that have increased since December 2020 by 3-5% overall, with lumber well ahead of that pace. We can assign a certain amount of the price impact to Covid-19 induced diminished demand for product, allowing suppliers to reduce inventories, and the current increased demand across markets – residential wood demand in particular – has been

increased and inventories are ramping back up (as are costs) to accommodate. Governmental policy changes are having an impact on cost. The pent-up demand is becoming evident across markets, and our construction partners are keeping us apprised of the situation. There will also be a necessary labor cost pressure as construction demand increases, and the post-Covid work force seeks equilibrium. An ancillary cost impact will be the inevitable extended schedule of Construction as a result of material and labor challenges, so General Conditions, Financing, and Design Fees will be greater in some cases.

As we progress through the pandemic and its impacts, the focus has begun to shift from the short-term impacts on commercial real estate and our development to a longer-term evaluation. As discussed previously, the impact of cost acceleration on the cost of building delivery and the subsequent impacts on rental rates will require consistent monitoring. The issue will not be exclusive to SkyBridge or the East Valley, but the margins will be reduced and the price volatility will make deals more competitive. Another impact of the pandemic seems to be a reduced willingness of tenants, especially corporate groups, to consider longer-term leases. The desire to maintain a nimble structure currently seems to outweigh the benefits of longer-term deal rents and amortizations. All of this is not unmanageable but will require the attention of SkyBridge and its partners as we move closer to a resolution of the pandemic and its effects. Rest assured that SkyBridge and its partners will continuously monitor this situation and update all involved parties with each development.

VII. General Marketing Plan and Potential Takedowns for next Three Years

SkyBridge Arizona has once again extended its contract with CBRE to market and lease the facilities being developed. As part of this agreement, CBRE continues to work through one of their affiliates, Streetsense, to create a brand awareness and an international marketing campaign. This will include or has completed the following:

- Brand Development (Ongoing)
- Immersion + Discovery
- Concept Development: Look and Feel + Messaging Platform (Ongoing)
- Digital Flipbook (Complete and Updating)
- Brand Video Flythrough (Complete)
- Communications Strategy (Complete)
- Communications Playbook (Ongoing)
- PR Newswire – 6x annually (Ongoing)
- Updated Digital and Physical Brochures for Individual Projects
- Attendance at Upcoming MRO and NBAA Conventions
-

In addition, CBRE is providing potential tenants with the information on available on Business Incentives to locate at SkyBridge Arizona:

- Expedited Customs' Unified Cargo Processing Program (UCP), as described.
- Military Reuse Zone offers aerospace & aviation-related businesses key savings:
  > Transaction Privilege Tax
  > Job Tax Credits for net new jobs created up to $10,000 per employee over a 5-year span
  > Personal property tax reduction for five years
- Job training funds available
- US Customs and SAT on-site (As UCP Program grows)
- HubZone Eligible
- Foreign Trade Zone Pending
- Opportunity Zone

Based on the strength of the post-Covid-19 Market and the ongoing desire of prospective Tenants to be located next to a major airport, we continue to expect to Takedown Phase I – 187 Acres of Horizontal Infrastructure as well as approximately 1.0 Million square feet in the next three years (2023). Particular targets include the Industrial and Light Manufacturing markets, as well as MRO and General Aviation users on the air-side parcels being created.

VIII. Local and DBE/MBE/WBE/VBE Participation Rates

SkyBridge has been given a Goal of 25% for Local and DBE/MBE/WBE/VBE Participation. We continue to convey this goal to vendors and contractors and will present progress going forward in subsequent Reports.

The Final Participation Rates for each category are, for Lots 106 & 107:

Local 45%

DBE 2%
MBE 12.5%
WBE
SBE 8.25%
VBE

SkyBridge Arizona will continue to request and monitor the tracking of this participation from its Contractors, Vendors, and Consultants on each Vertical Development, as well as the impending Horizontal Infrastructure work.

IX. Community Involvement Plan

SkyBridge Arizona continues to maintain community contacts in a number of ways. A regular attendee at SMERF – South Mesa Economic Resource Forum – in both virtual and (prior) live venues, SkyBridge has recently presented an update to the group about current project status and a look-ahead. SkyBridge has recently met with leadership of the ASU Polytechnic Campus and discussed our progress and the University's previous and future assistance in SkyBridge presentations, as well as the ASU Research Park development status. SkyBridge Staff, which has been expanded locally, has also presented and provided tours, as the pandemic has allowed, for municipal leaders and Board Members, as well as State and Local Economic Development groups. While the "virtual" nature of our existence and exposure has proved challenging over the past year, SkyBridge remains "on the radar" of the community and regional leadership as we move forward into 2021.

As a part of our Community Involvement Plan, the Groundbreaking for the SkyPlus Hotel Project included, in addition to direct stakeholders like PMGAA and the SkyBridge teams, invitations to each PMGAA Board Member municipality and Native American Community, elected officials, US Customs and Border Protection, SAT, Airport tenants, Mexican Consulate officials, and various Chambers of Commerce associates. While the attendance was limited, the event and the project were well-received in the Community and continue to be a source of interest in the Development. We will maintain our status of being completely invested in the wider community around Phoenix-Mesa Gateway Airport and enhance that investment as we move out of the pandemic.

X. Unified Cargo Processing Program

-Statistics on Export Activity: None since the previous 2 test flights with a charter aircraft to Hermosillo, Mexico in 2019.

-Statistics on Import Activity: NA

-Number of Mexican Customs Officials Stationed Permanently: Currently none stationed on Airport. Mexican Authorities have indicated that the Program will be supported from the Nogales Port-of-Entry until such time as the Program volume merits full-time SAT personnel.

-Narrative regarding Opportunities or Constraints with Respect to the Program: As a result of the pandemic, the codification of the Mexican process has been slowed due to travel restrictions, especially for the new Customs Director in Mexico. His desire to visit and see the facilities, Airport, and SkyBridge Arizona development remains high, and we anticipate a visit in the very near future. USCBP remains supportive of the Program, and two (2) 180-day Pilot Program extensions have been granted in the course of the pandemic. SkyBridge has maintained contact with a potential operator of the facility and program, and general market interest in the UCP remains high. SkyBridge continues to maintain contact with the City of Mesa with respect to the operational status of the Foreign Trade Zone as pertains to the UCP Program. Once the Mexican authorities have completed their visit, we forecast a reinvigoration of the program itself and the further discussions of the operational logistics that had commenced prior to the pandemic.

MINUTES OF PUBLIC MEETING OF THE
PHOENIX-MESA GATEWAY AIRPORT AUTHORITY
BOARD OF DIRECTORS | April 20, 2021

A public meeting of the Phoenix-Mesa Gateway Airport Authority (PMGAA) was convened on Tuesday, April 20, 2021, beginning at 9:00 a.m. in the Board Room (Saguaro A&B) of the Gateway Administration Building, 5835 S Sossaman Road, Mesa, Arizona.

Members Present

Mayor Gail Barney, Queen Creek
Councilmember Jim Waring, Phoenix (*via videoconference*)
Mayor John Giles, Mesa (*via videoconference*)
Mayor Brigette Peterson, Gilbert (*via videoconference*)
Mayor Chip Wilson, Apache Junction
Lt. Governor Monica Antone, Gila River Indian Community (*via videoconference*)

Airport Staff Present

J. Brian O'Neill, Executive Director/CEO
Scott Brownlee, Deputy Director/COO
Chuck Odom, CFO
Misty Johnson, Clerk of the Board
Jill Casson Owen, Attorney (*via videoconference*)

** Neither present nor represented*

1. **Call to Order** at 9:12 a.m. (Mayor Barney)

2. **Roll Call**

3. **Pledge of Allegiance**
   Mayor Barney introduced and welcomed the newest PMGAA board member representing the City of Phoenix, Councilmember Jim Waring.

4. **Call to the Public**
   There were no public comments.

5. **Executive Director's Report** J. Brian O'Neill, A.A.E., Executive Director/CEO
   Executive Director O'Neill provided a briefing on PMGAA financial performance, passenger activity, the community noise report, and various Airport projects.
   - Fiscal Year-to-Date (FYT) Net Operating Income is $1,681,074.
   - Commercial passenger activity at Gateway Airport is recovering since a low point in April 2020 due to the COVID-19 pandemic. A FYTD21 report revealed Gateway Airport is down 37% compared to the same time in FYTD20.
   - PMGAA welcomes Avelo Airlines as its newest airline. The new, ultra-low-cost airline will offer daily nonstop service to Burbank, California beginning May 3rd.
   - Allegiant Air has two new upcoming destinations. The inaugural flight to San Diego, California is on May 27th and the Jackson Hole, Wyoming inaugural flight is on June 2nd.
   - Aviation Performance Solutions (APS) has substantially completed construction of their 65,000 SF hangar/corporate headquarters located at the north end of the airfield.

DRAFT

- Gateway Executive Airpark's 183,000 SF hangar complex has received all necessary permitting from the City of Mesa and is beginning construction. This impressive three-hangar project is comprised of both multi-tenant and single tenant lease opportunities.
- SkyBridge Arizona is moving forward with a 127-room Wyndham dual-brand hotel. Approval for this exciting project is included in the consent agenda.
- Last week the U.S. Forest Service opened their Mesa base. They have already had activity fighting fires around the region. Up to three DC-10 Tankers are expected to be stationed at Gateway Airport this fire season.
- Implementation of the federal Real ID/Arizona Travel ID program that would require a Real ID compliant driver's license or a valid passport for air travel or to enter federal buildings may be effective October 1, 2021.
- The Air Traffic Control Tower has gone vertical! Three levels of pre-cast concrete exterior wall panels have been erected and work has begun on the elevator shaft and interior stairwell.
- An additional four aircraft parking spaces are being constructed across from the commercial passenger terminal. This new remain overnight (RON) area should be available for use later this summer.
- The design contract for Phase III, and potentially Phase IV, of the Taxiway Alpha Apron Expansion Project is included in today's consent agenda. Ramp space is at a premium and PMGAA is looking to expand aircraft parking opportunities at the south end of the airfield.
- The Taxiway Whiskey Reconstruction project is underway. This ADOT grant funded project will improve a section of pavement directly in front of the commercial passenger terminal. All the work will be done at night when the commercial activity is done for the day.
- Mayor Barney asked about development of a future commercial passenger terminal on the east side of the Airport. Executive Director O'Neill explained that PMGAA has existing capacity in its current terminal, must further develop long-term revenue sources to support the debt service of any future bonds, and needs to get the airlines onboard with the idea of a new terminal. PMGAA is also exploring the redevelopment of the terminal annex (Gates 1-4) to increase terminal capacity and create another aircraft parking position.

6. **COVID Federal Relief Grant Presentation** – Chuck Odom, Chief Financial Officer
CFO Odom provided a breakdown of the three COVID-19 Federal Relief Grants and how the funds plan to be utilized to sustain Airport operations. PMGAA is scheduled to receive approximately $33MM in grants from all three federal relief packages. These federal grants are being used to pay operating expenses during the prolonged COVID-19 virus outbreak.

Coronavirus Aid, Relief, and Economic Security Act (CARES Act)

- $20,530,276 Airport Improvement Program Grant (Airport Only)
- $744,392 Treasury Dept. – Payroll Support Agreement (FBO Salaries & Benefits) (PSP1)

Coronavirus Response and Relief Supplemental Appropriations Act of 2021 (CRRSAA)

- $4,175,991 Airport Improvement Program Grant (Airport Only)
- $88,870 Concessions Relief Funding (For Rent MAG Relief for Qualifying Concessionaires Only)

American Rescue Plan Act of 2021 (ARPA)

- ~$8,200,000 Airport Improvement Program Grant (Airport Only) (Estimate Only)
- ~$755,000 Concessions Relief Funding (Estimate Only – Rules for Small and Large Concessions)

7. **Gateway*East* Solicitation Update Presentation–** Shea Joachim, Business Development Director Gateway*East* is a 400-acre mixed use non-aeronautical master development opportunity located on the east side of the Airport. On January 14, 2021 PMGAA held a virtual promotional event to introduce the Gateway*East* development opportunity to experienced large-scale developers. The request for qualifications was released on January 21, 2021. The statement of qualifications was due on March 22, 2021. Twelve statement of qualifications were received. Evaluations of these twelve submittals are currently in process. The Request for Proposals will be released in May. PMGAA anticipates having the master developer selected by the end of 2021.

8. **Consent Agenda**

   a) **Minutes** of the Board Meeting held on **March 16, 2021.**

   b) **Resolution No. 21-08** Authorizing the procurement of security cameras, equipment, and installation from **Convergint Technologies, LLC**, in an amount not to exceed $151,390.96.

   c) **Resolution No. 21-09** Authorizing a Development Lease with **SKYPLUS HOTELS, CORP,** an Arizona Corporation, for 4.086 acres located within the SkyBridge Arizona project identified as Lot 116-A. The lease term is SIXTY (60) years commencing on May 1, 2021. To authorize an Adjustment Amendment with **MESA SKYBRIDGE, LLC** to concurrently remove Lot 116-A from the Master Lease Agreement.

   d) **Resolution No. 21-10** Authorizing paving services with **Ace Asphalt of Arizona, Inc. (Ace Asphalt)** for Asphalt Rehabilitation Services for the North Remote Aircraft Parking Apron Project under CIP 1229, in an amount not to exceed $440,895.76. Additionally, it is requested that this project be amended into and authorized as part of the 2021 Capital Budget Program.

   e) **Resolution No. 21-11** Authorizing a Brochure Display and Distribution Concession Agreement with **Certified Folder Display Service, Inc**. The agreement term is four years with two two-year renewal options, commencing October 1, 2021 with a Year 1 Minimum Annual Guarantee (MAG) of $4,500 and percentage rent of 30%.

Mayor Brigette Peterson moved to approve the Consent Agenda.
Mayor Chip Wilson seconded the motion.
The motion was carried unanimously

Consideration and Possible Approval of:

9. **Resolution No. 21-12 –** Authorizing the Executive Director to execute an operating agreement with **TEM Enterprises** for commercial air service at the Airport.

Mayor Chip Wilson moved to approve Resolution No. 21-12.
Lt. Governor Monica Antone seconded the motion.
The motion was carried unanimously

10. **Board Member Comments/Announcements.**
There were no comments or announcements.

11. **Next Meeting: Tuesday, May 18, 2021** at 9:00 a.m. in the Board Room (Saguaro A&B) of the Gateway Administration Building, 5835 S Sossaman Road, Mesa, Arizona. Members of the Phoenix-Mesa Gateway Airport Authority may attend either in person or by telephone/videoconference.

12. **Adjournment.**
    The meeting adjourned at 9:40 a.m.

Dated this _____ day of _____ 2021.

_____
Misty Johnson, Clerk of the Board

Phoenix-Mesa Gateway Airport Authority
5835 S Sossaman Road
Mesa, Arizona 85212-6014
www.gatewayairport.com

Board Action Item

Re: Resolution 21-13

To:	**Board of Directors**
From:	**Veronica Lewis, Human Resources Director**
Through:	**Scott Brownlee, Deputy Director/COO**
	J. Brian O'Neill, A.A.E., Executive Director/CEO
Subject:	**Update Personnel Rules**
Date:	**May 18, 2021**

Proposed Motion
To approve the amended and restated Phoenix-Mesa Gateway Airport Authority (PMGAA) Personnel Rules.

Narrative
Phoenix-Mesa Gateway Airport Authority (PMGAA) staff has reviewed the PMGAA Board of Director's adopted Personnel Rules that allow the Authority to operate effectively and efficiently. Recommended changes to the Personnel Rules are summarized below:

- Definition for Common Review Date
- Change Merit to Performance Based
- Update organizational policy approval to Department Director
- Updated EEO statement to be more inclusive
- Included verbiage for new hires and performance pay eligibility
- Added job abandonment
- Updated accrual earning for employees on unpaid leave
- Updated sick leave at separation
- Added committed partner to use of sick and bereavement leave
- Added vaping to smoke free section
- Added abusiveness and updated felony reporting under standards of conduct
- Added lactation breaks

Fiscal Impact
There is no financial impact.

Attachment(s)
Draft Personnel Rules with red-line changes.

RESOLUTION NO. 21-13

WHEREAS, the Phoenix-Mesa Gateway Airport Authority ("Authority"), a joint powers airport authority formed pursuant to Arizona Revised Statute §28-8521 *et seq.* owns and operates the Phoenix-Mesa Gateway Airport ("Airport"); and

WHEREAS the Authority desires to amend and restate the Authority's Personnel Rules.

NOW, THEREFORE, BE IT RESOLVED by the Board of Directors of the Authority as follows:

> **The Board of Directors of the Authority hereby approve the amended and restated Phoenix-Mesa Gateway Airport Authority Personnel Rules. This resolution also authorizes the Chair or Executive Director/CEO to execute such Policy, with such insertions, deletions, and changes as may be approved by the Chair or Executive Director/CEO, necessary to carry out the purposes and intent of this Resolution.**

Passed and adopted by the Authority this 18th day of May, 2021.

Gail Barney, Chair

ATTEST:

Misty Johnson, Clerk of the Board

APPROVED AS TO FORM:

Jill Casson Owen, Attorney

PHOENIX-MESA GATEWAY AIRPORT AUTHORITY

PERSONNEL RULES

Effective ~~March 1, 2019~~June 1, 2021

TABLE OF CONTENTS

I. ADMINISTRATIVE 4
SECTION 1.1: DEFINITIONS 4
SECTION 1.2: ADMINISTRATIVE PROVISIONS 6
SECTION 1.3: EQUAL EMPLOYMENT/AFFIRMATIVE ACTION STATEMENT 7
SECTION 1.4: CODE OF ETHICS 7
SECTION 1.5: PERSONNEL RECORDS 8
II. EMPLOYMENT 9
SECTION 2.1: GENERAL EMPLOYMENT PROVISIONS 9
SECTION 2.2: RECRUITMENT 9
SECTION 2.3: APPOINTMENT 10
SECTION 2.4: REINSTATEMENT OF BENEFITS 10
SECTION 2.5: EMPLOYMENT OF RELATIVES/NEPOTISM 10
III. CLASSIFICATION AND COMPENSATION 11
SECTION 3.1: CLASSIFICATION 11
SECTION 3.2: PAY PLAN 11
SECTION 3.3: WORK SCHEDULES 12
SECTION 3.4: FAIR LABOR STANDARDS ACT (FLSA) STATUS/OVERTIME 13
SECTION 3.5: SHIFT DIFFERENTIAL 14
SECTION 3.6: STANDBY AND CALLOUT PAY 15
IV. BENEFITS 16
SECTION 4.1: INSURANCE PROGRAMS 16
SECTION 4.2: RETIREMENT 16
SECTION 4.3: ABSENCE FROM WORK 16
SECTION 4.4: HOLIDAYS 16
SECTION 4.5: VACATION 17
SECTION 4.6: SICK LEAVE 19
SECTION 4.7: BEREAVEMENT LEAVE 21
SECTION 4.8: WORKERS COMPENSATION LEAVE 21
SECTION 4.9: JURY OR WITNESS LEAVE 21
SECTION 4.10: ELECTION LEAVE 21

SECTION 4.11: MILITARY LEAVE 22
SECTION 4.12: SPECIAL LEAVE 22
SECTION 4.13: FAMILY MEDICAL LEAVE (FMLA) 22
SECTION 4.14: TRAINING AND DEVELOPMENT 22
SECTION 4.15: TUITION REIMBURSEMENT 23
V. WORKPLACE STANDARDS 23
SECTION 5.1: EMPLOYEE CONCERNS 23
SECTION 5.2: RESPECTFUL WORKPLACE 23
SECTION 5.3: ALCOHOL AND DRUG FREE WORKPLACE 23
SECTION 5.4: SMOKE FREE WORKPLACE 24
SECTION 5.5: PROBATION 24
SECTION 5.6: PERFORMANCE EVALUATIONS 24
SECTION 5.7: CHANGES IN ASSIGNMENT 24
SECTION 5.8: SEPARATIONS 26
SECTION 5.9: STANDARDS OF CONDUCT 26
SECTION 5.10: ADMINISTRATIVE LEAVE 27
SECTION 5.11: DISCIPLINARY ACTIONS 27

I. ADMINISTRATIVE

SECTION 1.1: DEFINITIONS

The following words and phrases used in these Rules have the following defined meanings unless otherwise clearly indicated by the context.

Accrual – The accumulation of leave time.

Administrative Leave – Management directed time off with pay for an employee that is not charged against the employee's paid time off categories.

Announcement/Posting – The notice of intent to fill a position.

Applicant – An individual who has submitted an application for a posted employment opening.

Chain-of-Command – In the workplace, includes the supervisory responsibilities sequence of employee, supervisor, manager, director, and the executive.

Classification – A group of positions similar as to duties performed, scope of discretion and responsibility, skills and qualifications requirements, and other such characteristics that the same title, pay range, and job description is applied.

Common Review Date – A common date of October 1 upon which employees are evaluated for performance-based pay increases.

Compensation – All forms of financial returns, tangible services and benefits that employees receive as part of being employed.

Controlled Substance – Any narcotic, prescribed, or un-prescribed drug as defined by state and federal law.

Days – Calendar days unless otherwise stated.

Demotion – The movement of an employee from one position to another position having a lower rate of pay. A voluntary demotion is a demotion initiated by the employee. An involuntary demotion is a demotion initiated by PMGAA.

Department – An organizational unit of Phoenix-Mesa Gateway Airport Authority.

Discipline – Actions taken to address and correct an employee's work behavior or performance. Discipline may be up to and including termination of employment.

Emergency (Airport) – A sudden and unforeseen happening that requires service of an employee to protect the health, welfare, and safety of the Airport and/or community.

Employee – A person who holds an authorized-budgeted position.

Essential Functions – The most critical, time consuming and/or important tasks and duties of a position; the tasks and duties that form the reason for the existence of the position.

Exempt Employee – Employees who, because of their positional duties and responsibilities and level of decision-making authority, are exempt from overtime provisions of the Fair Labor Standards Act (FLSA).

Family and Medical Leave Act (FMLA) – A federal law that governs a period of employment protection during which an eligible employee may return to the same or similar position with equivalent pay and benefits after a qualified absence.

Flex Time – Adjusting an employee's work schedule.

Full-Time – An employee who regularly works over 30 hours per week and is~~are~~ appointed to a full-time position.

Hire Date – The most recent first date of employment with the Airport Authority in a position other than a temporary position.

Leave – An authorized absence or time off from regularly scheduled work hours, which has been approved by the proper authority. Also referred to as a Leave of Absence (LOA).

Management – Airport Authority employees who have specific responsibility for a particular Airport Authority department to supervise employees, functions, and/or projects.

~~**Merit**~~ **Performance-Based Pay Increase** – A pay increase based on job performance within the limits of a position's established pay range. ~~Also known as Pay for Performance.~~

Nepotism – The potential for or perception of preferential treatment due to a family or similar relationship.

Non-Exempt Employee – Employees who, because of the type of duties performed, the usual level of decision making authority, and the method of compensation, are subject to all Fair Labor Standards Act (FLSA) provisions including the payment of overtime.

Organizational Policy – Policy statements, administrative regulations and associated procedures for the efficient and effective operation of the organization and the administration and execution of Airport Authority matters which are created and modified at the ~~sole~~ discretion of the Department Director and/or Executive Director.

Probation Period – A period of time for all new employees and employees receiving a promotion or demotion during which time the employee's performance in the new position is evaluated.

Overtime – Hours worked in excess of forty (40) hours by an employee in a non-exempt (as defined by FLSA) position during his/her established work week.

Part-Time Benefited – An employee who is budgeted to work less than thirty (30) hours per week and is eligible for vacation, sick and holiday leave.

Part-Time Non-Benefited – An individual who is appointed to a position that requires working a work week of less than thirty (30) hours and is not eligible for any holiday, sick or vacation leave accrual.

Pay Range – A pay plan with established minimum to maximum hourly or bi-weekly pay rate dollar amounts associated with each position classification.

Pay Reduction – A decrease in the hourly or bi-weekly pay rate, which may have resulted from a reduction to the pay rate for a pay range or reallocation of a position to a lower pay range.

Performance Evaluation – The written review of an employee's performance of position duties and responsibilities.

Personnel Action – Any official action taken with reference to appointment, pay, promotion, suspension, transfer, layoff, termination, leave, or any other action affecting the status of an employee.

Promotion – The movement of an employee from one position to another having a higher pay range.

Reclassification – Changing the classification of a position when a material change in duties or responsibilities occurs.

Regular Rate of Pay – An hourly rate of pay determined by dividing the total compensation actually earned for the normal non-overtime workweek by the total number of hours worked. Includes all renumeration for employment paid to, or on behalf of, the employee, except payments specifically excluded under Section 7(e) of the Fair Labor Standards Act (FLSA).

Resignation – Written notification by an employee indicating his/her intention to terminate employment with Airport Authority.

Retirement – Any employee covered by Arizona State Retirement System who has reached the designated age and possesses the appropriate number of years of service, and who elects to receive an annuity benefit from the plan.

Review Date – The date when an employee's performance is evaluated.

Separation – The end of employment; can be initiated by either the Airport Authority or the employee.

Suspension – A form of discipline consisting of relieving an employee from work without pay for a specified period of time.

Temporary – An assignment that exists for a limited or defined period of time.

Transfer – The movement of an employee from one position to another position within the Airport Authority at the same pay range.

SECTION 1.2: ADMINISTRATIVE PROVISIONS

Phoenix-Mesa Gateway Airport Authority adopts the Personnel Rules to provide a uniform system of personnel administration. They are not legally binding and are not to be construed as, and do not constitute, a contract, expressed or implied, or a guarantee of employment for any specific duration.

Phoenix-Mesa Gateway Airport Authority hereinafter may be referred to as "PMGAA," "Airport Authority," "Airport," or "Employer." Phoenix-Mesa Gateway Airport may be referred to as "Gateway."

A. **Applicability**: These Rules are applicable to all employees and positions at Phoenix-Mesa Gateway Airport Authority. The information contained in these Rules supersedes all previous personnel policies, procedures, and administrative regulations. These Rules are subject to change at the discretion of the Phoenix-Mesa Gateway Airport Authority Board of Directors.

B. **Delegation of Authority**: Unless otherwise stated in these Rules, the Executive Director/Chief Executive Officer (CEO) may delegate any authority granted to him/her.

C. **Availability of Funds**: The granting of any compensation in these Rules is contingent upon the availability of funds, as determined by the budget, the authority of the Executive Director and/or the Authority Board of Directors. The Airport Authority works to provide its employees with benefits and employment conditions that are desirable, but the Airport Authority reserves the right to change benefits and employment conditions when deemed reasonable to do so by the Authority Board of Directors or Executive Director.

D. **Conflict with Federal or State Requirements**: Any provision of these Personnel Rules that conflicts or is inconsistent with state or federal rules, regulations, or standards shall not be applicable.

E. **Service of Notice**: If any document or notice is to be given to any individual or department, the notice or document may be served personally or by mail to the last known residence or business address of the addressee. Unless otherwise provided by law or these Rules, service is complete upon mailing.

F. **Correction of Errors**: The Executive Director may correct a manifest error or clear inequity affecting an employee or an applicant for employment.

SECTION 1.3: EQUAL EMPLOYMENT/AFFIRMATIVE ACTION STATEMENT

Phoenix-Mesa Gateway Airport Authority is an Equal Employment Opportunity (EEO)/Affirmative Action employer. Equal Employment has been, and will continue to be, a fundamental principle at the Airport Authority to ensure a work environment that is free from unlawful discrimination. The Airport Authority will consider all applicants on the basis of his/her qualifications for available positions without regard to race, color, ~~religion, sex,~~ national origin, age, disability, gender, sexual orientation, gender identity or expression, religion, ~~-~~veteran status, ~~or~~ genetic~~s~~ information and any other protected characteristic or category under applicable law. As such every effort will be made to ensure that appointments, promotions, reclassifications, transfers, compensation, training, terminations, or any other type of personnel actions are based on merit, fitness, or other factors determined to be non-discriminatory. (See Organizational Policy #400.02 - EEO/Affirmative Action)

SECTION 1.4: CODE OF ETHICS

A. The Code of Ethics is the general value system and ethical principles embodied by the Airport Authority. Expected ethics include that employees strive to be:

1. Honest, trustworthy, and fair in all professional relationships;

2. Considerate and treat all people with dignity and respect to foster a work environment of encouragement, acceptance, cooperation, reliability, support, and teamwork;

3. Committed to accomplishing tasks in a safe and exceptional way;

4. Dedicated to providing quality services safely and with the most efficient use of available resources;

5. Responsible to maintain acceptable attendance and punctuality as determined by the Airport Authority;

6. Compliant with reasonable grooming and dressing habits conducive to a business atmosphere;

7. Compliant with the Airport Authority's policies, practices, and procedures; and

8. Compliant with the laws and report, within five days, any noncompliance resulting in a conviction.

B. **Conflict of Interest**: A conflict of interest can be defined as a situation in which an employee is in a position to exploit their professional or official capacity for his/her personal benefit. The existence of a conflict of interest may not, in and of itself, be evidence of wrongdoing. A conflict of interest can, however, become a legal matter when an employee influences the outcome of a decision for personal benefit. An employee is considered to have a conflict of interest when engaged in, but not limited to, the following:

1. Acceptance of a bribe, being money, a promise, or favor in order to influence the judgment or conduct of a person in the course of work or in connection with work;

2. Engaging in outside business activities on the Airport Authority's time, regular duties, or that interferes with the Airport Authority's interest. Outside employment will not be considered a valid reason for absenteeism, tardiness, or poor work performance;

3. Soliciting, selling, displaying, promoting, or distributing merchandise, literature, or services, or conduct a similar form of business activity on Airport property unless authorized by the Executive Director; or

4. Threatening to use, or attempting to use, undue influence, extortion, or blackmail in securing employment benefits or advantages for the employee or another individual.

SECTION 1.5: PERSONNEL RECORDS

A. **Content:** Each employee will have a personnel file that will serve as the official record of employment. It may include, but is not limited to, the following: employee application; new employee hire form; performance evaluations; personnel change forms; promotion, demotion, transfer, or position changes; disciplinary actions; certificates of recognition and accomplishment; and other employment related documents deemed appropriate by Human Resources.

B. **Access**: An employee shall have access to his/her official personnel file during normal Airport Authority Human Resources business hours. Employee personnel files are treated as confidential; however, contents are subject to public record.

C. **Access to Other Files:** The presence of copies of any item in any other informational file concerning an employee shall not in itself confer upon such employee any right of access to such file.

D. **Control:** The official personnel file/record will remain in the control of Human Resources, unless otherwise ordered by a court of competent jurisdiction.

II. EMPLOYMENT

SECTION 2.1: GENERAL EMPLOYMENT PROVISIONS

A. **At-Will:** Employment with Phoenix-Mesa Gateway Airport Authority is at-will, meaning that no one has a contractual right, expressed or implied, to remain in the Airport Authority's employ and the Airport Authority may terminate an employee, or an employee may terminate his/her employment, with or without cause, and with or without notice, at any time.

B. **Employment Eligibility**: Applicants for employment at the Airport Authority must present proof of identity and eligibility for employment as required by federal and state law.

C. **Age Requirement**: The only minimum age requirement is that imposed by state or federal law.

D. **Pre-Employment Requirements**: All individuals recommended for employment will be required to pass a background investigation which may include pre-employment drug screening, employment history verification, criminal record verification, motor vehicle record check, and social security number trace. Should the potential new hire be recommended for a position requiring unescorted access to Security Identification Display Area (SIDA) they are subject to a fingerprint based criminal history check through the Federal Bureau Investigation (FBI).

E. **Academic**: All postsecondary academic achievements required to meet the minimum qualifications of a position must be attained in an academic institution recognized by an accredited association as determined by the Human Resources Director.

F. **Outside Employment**: An employee may engage in outside employment if the employment does not adversely impact the employee's PMGAA work and does not create a conflict of interest or the appearance of a conflict of interest with the employee's PMGAA job. An employee who wishes to engage in outside employment is required to notify PMGAA in writing. The employee may be asked to choose between his/her PMGAA employment and his/her outside employment if it is found that the outside employment interferes with the employee's duties at PMGAA.

G. By accepting employment with PMGAA, employees assign to PMGAA all rights to patent or otherwise project inventions or intellectual property of any kind the employee may develop on PMGAA time, or with PMGAA property, or arising out of his/her PMGAA duties and responsibilities.

SECTION 2.2: RECRUITMENT

When a position becomes vacant and approval to fill has been given, Human Resources may conduct a recruitment to fill the position.

A. **Notice of Vacancy**: If an external job posting is to be conducted, public notice shall be accomplished by posting announcements of the vacancies by such means as the Human Resources Director shall direct.

B. **Applications**: All applications for employment shall be submitted on the designated forms. Applications and any accompanying documentation become the property of the Airport Authority and shall not be returned. Applications are only accepted for open positions that have been announced during the recruitment period.

C. **Disqualification**: Applicants for open positions may be denied further consideration for employment, for, but not limited to, the following reasons: failure to meet the minimum qualifications specified in the announcement; failure to submit complete and accurate application; or submission of the application after the specified time period.

D. **Selection Methods/Examinations**: Human Resources shall review and approve all selection methods and rating criteria in advance to ensure compliance with legal guidelines. All selection methods for employment shall be job related and designed to reveal the ability to perform the type of work for which the applicant has applied.

SECTION 2.3: APPOINTMENT

With the approval of the Executive Director, a vacant position may be filled by appointment on the basis of merit demonstrated by examination or other evidence of competence. The individual appointed to a position must meet the minimum qualifications for the designed classification.

SECTION 2.4: REINSTATEMENT OF BENEFITS

Employees who separate in good standing and are rehired within nine (9) months of the date of their separation shall begin accruing vacation at the same rate as they were at the time of separation. In addition, the returning employee's forfeited sick time shall be restored upon reinstatement. Seniority (years of service) for the purposes of recognition or shift scheduling shall not be restored. Rehire request is subject to approval and contingent on the availability of positions and may be reviewed along with the normal recruitment process in filling a vacant position.

SECTION 2.5: EMPLOYMENT OF RELATIVES/NEPOTISM

Relatives and significant others shall not maintain a regular reporting relationship to one another in the chain of command. If such a relationship is created, one of the parties must elect to transfer to or be selected for a vacant position opening (if available) where there is no chain of command reporting relationship. If a transfer compatible with this policy cannot be made within ninety (90) days, it shall result in the separation of one of the employees from the Airport Authority employment. It shall be the responsibility of the employee who holds the highest classification level to immediately notify his/her department director of relationships as described above.

III. CLASSIFICATION AND COMPENSATION

SECTION 3.1: CLASSIFICATION

Human Resources shall place every position in a class based on its essential functions and maintain job descriptions for each classification within the Airport Authority. Human Resources may establish new classifications and revise or delete existing classifications as needed.

SECTION 3.2: PAY PLAN

Human Resources shall prepare a pay plan listing all classifications with corresponding pay ranges. All Airport Authority employees shall be paid within the assigned pay range of his/her positions, unless otherwise explained.

A. **Entrance Pay Rates**: Except as specified below, all new employees shall be paid at the minimum of the pay range for the position hired.

   1. If the hiring manager determines that a particular applicant has special qualifications that justify a pay rate that is higher than the minimum of the pay range, the hiring manager, with the Human Resources Director and the Executive Director's approval, may authorize a special entrance pay rate at a higher pay rate within the position's pay range for the applicant.

B. ~~**Merit**~~ **Performance-Based Pay Increases**: Employees may be considered for a performance-based pay~~merit~~ increase~~s~~ annually on a common review date, if performance and budget warrants.

   1. The Airport Authority routinely establishes ~~merit~~ performance-based pay guidelines that generally are issued in conjunction with the Airport Authority's budget cycle.
   ~~1.~~2. An employee hired or promoted within three (3) months of the common review date of October 1 will need to wait until the following year to be eligible to receive their first performance-based pay increase.

   ~~2.~~3. Exceptions to the guidelines may be made with the approval of the Human Resources Director and Executive Director.

   ~~3.~~4. Employees at the maximum of their pay range may receive performance-based~~merit~~ compensation in a lump sum payment that does not become part of base compensation.

C. **"Frozen" Pay Rate**: Based upon position classification studies, reclassification of a position, or a voluntary demotion, the Executive Director may authorize a "frozen" pay rate. A "frozen" pay rate is an employee's pay rate in excess of the maximum pay rate of the pay range assigned to the position classification. No pay rate increases, including market adjustments, cost of living adjustments (COLA), performance-based ~~merit~~ pay rate increases, and lump sum performance-based~~merit~~ payments shall be in effect for an employee with a "frozen" pay status and the employee will remain at this "frozen" pay status until the pay range for the new position reaches the employee's pay rate, at which point the employee will again be eligible for pay increases.

D. **Position Reclassification**: The Executive Director may approve exceptions to this section.

   1. If material and permanent changes occur in the duties and responsibilities of a position, the Department Director with the approval of the Department Executive may request to have Human Resources conduct a classification study of the position.

~~1.~~2. An employee whose position is reclassified to a class in the same pay range shall receive the same salary as before the reclassification.

~~2.~~3. An employee whose position is reclassified to a higher pay range shall receive the same salary, unless the salary is less than the entry pay of the new pay range, in which case the employee shall receive the entry salary of the new pay range.

~~3.~~4. An employee whose position is reclassified to a lower pay range by the Airport Authority, typically will continue to receive the same pay rate. If this pay rate is higher than the maximum of the new position's pay range, the employees pay rate will become "frozen".

E. **Unscheduled Pay Increase**: An employee may be awarded an Unscheduled Pay Increase, with the approval of the Executive Director, to recognize exceptional performance in the employee's position or to adjust salary based on organizational needs. This award is a permanent increase of pay and may be given only to employees below the maximum of the pay range for that position.

SECTION 3.3: WORK SCHEDULES

Phoenix-Mesa Gateway Airport Authority reserves the right to establish work schedules (standard hours of work) in accordance with operational needs.

A. **Pay Period**: The pay period is defined as two (2) work weeks. The standard pay period begins on Monday at 12:00 AM and ends the second Sunday thereafter at 11:59 PM.

B. **Work Week**: The standard work schedule is forty (40) hours in each work week. For non-exempt employees, the work week defines the specific period on which overtime calculations are based. The work week is a consecutive seven-day period starting at the same time each week.

C. **Scheduling**: The Airport Authority may require an employee to work overtime and/or to work beyond his/her normally scheduled hours to accommodate operational needs.

1. Overtime may be considered a condition of employment. Refusal to accept overtime work may be subject to disciplinary action. In cases of conflict with an outside activity, the employee's obligations to the Airport Authority must be given priority.

2. Prior approval by the immediate supervisor is required before a non-exempt employee may work overtime. An employee who works overtime without approval will be paid for the overtime hours worked, however he/she may be subject to disciplinary action.

3. Non-exempt employees may be subject to on call standby status for a designated specific period of time in addition to his/her regular work schedule.

D. **Rest Periods**: Supervisors may allow an employee paid rest or break periods, based on operational needs, during his/her workday if normal business functions would not be impaired. Rest periods or breaks shall be limited to fifteen (15) minutes for each four (4) hours worked. This time may not be combined or accrued to create an extended rest period or break period or to shorten the workday. If an employee is required to work through a rest period, the Airport Authority will not be obligated to provide an alternative rest period or to pay the employee more for that time than the Airport Authority otherwise would have paid.

E. **Meal Breaks:** An employee's work schedule may include an unpaid meal break each workday, during which the employee is relieved of all position duties and free to use the time for a meal break. A non-exempt employee is expected to take his/her meal breaks away from his/her workstation and may not work during his/her meal breaks without prior approval from his/her supervisor.

1. Supervisors should generally not interrupt an unpaid meal break; although, interruptions may be necessary, based on operational needs. If a non-exempt employee's meal break is interrupted by work responsibilities that preclude him/her from receiving at least thirty (30) minutes of uninterrupted meal break time, the entire meal break shall be considered time worked. If a non-exempt employee with a sixty (60) minute meal break receives an uninterrupted meal break of thirty (30) minutes or more, only the time actually worked by the employee during the meal break shall be recorded as work time.

2. Supervisors may adjust the employee's meal break schedule, if necessary, to ensure that the employee receives at least thirty (30) minutes of unpaid uninterrupted meal break time.

3. Some non-exempt positions are expected to be available during their meal breaks and as such are compensated for the meal break.

F. **Lactation Breaks:** PMGAA accommodates nursing mothers by providing a reasonable amount of break time to any employee each time such employee has the need to express breast milk for an infant child for up to one year from the birth of the child. This lactation break time shall, if possible, run concurrently with any break time and/or meal breaks already provided to the employee.

SECTION 3.4: FAIR LABOR STANDARDS ACT (FLSA) STATUS/OVERTIME

A. **Exempt Employees**: Certain employees shall be considered exempt from the FLSA, in accordance with FLSA exemption criteria.

1. Exempt employees shall not be entitled to overtime compensation and shall work whatever time is necessary to meet departmental needs and organizational service delivery demands.

2. For purposes of public accountability, all FLSA exempt employees must use accrued leave for absences of more than four (4) consecutive hours unless approval is given by the Supervisor. Otherwise, FLSA exempt employees who do not have accrued leave available may have their pay docked. FLSA exempt employees generally need not use accrued leave for absences of four (4) consecutive hours or less in a work day. Supervisor approval is required for any absence from work.

B. **Non-Exempt Employees**: Certain employees shall be considered non-exempt, in accordance with FLSA criteria.

1. **Overtime**: Overtime pay is administered in accordance with applicable federal and state laws.

   a. Overtime will be paid at one and one-half (1 ½) times the employee's regular rate of pay.

   b. Overtime is based on a scheduled forty (40) hour work week, not on an eight (8) hour day. Overtime pay is earned only for hours worked during the established work week after forty (40) hours have been completed.

c. For purposes of calculating overtime pay, only hours worked will be counted. Holidays hours will be counted as hours worked, only if the hours are actually worked. Sick and Vacation time will not be counted as time worked.

d. For the purposes of calculating overtime pay, the standby hours paid during a work week are not included in the hours worked.

SECTION 3.5: SHIFT DIFFERENTIAL

The Airport Authority provides additional compensation (shift differential) to employees working in specified non-exempt positions during specified evening and nighttime work hours. The shift differential compensation amount shall be $1.00 for each hour of work performed by a non-exempt employee in an eligible position between the hours of 5:00 p.m. and 5:00 a.m.

SECTION 3.6: STANDBY AND CALLOUT PAY

A. An employee who is eligible (non-exempt employee) for overtime pay is eligible for standby and call out pay.

B. Standby pay is payment received by an employee to pay the employee for being required to be available to provide services for a business need or an emergency during a designated specific period of time. An employee on standby on a day normally scheduled to work shall be paid one (1) hour of base pay as standby pay for that day. An employee who is on standby on a day on which the employee is not normally scheduled to work shall receive two (2) hours base pay for that day.

C. Call out pay is pay received by an employee for actually working during a time the employee is not normally scheduled to work, in response to a call out for a business need or an emergency. An employee who is called out for emergency service shall be paid one and one-half (1 ½) times the hourly base pay rate for a minimum of one (1) hour payable for the employee's regular scheduled work day or a minimum of two (2) hours payable for the employee's regular day off.

IV. BENEFITS

SECTION 4.1: INSURANCE PROGRAMS

Eligibility: All full-time employees are eligible to participate in employee health and welfare insurance programs beginning the first of the month after thirty (30) days of employment.

SECTION 4.2: RETIREMENT

All full time and qualifying part-time employees are required to participate in the Arizona State Retirement System (ASRS). ASRS is a cost-sharing, public employee, tax qualified, defined benefit plan. Both the employee and employer contribute to the member's retirement at an equal percentage of compensation. The appropriate percentage for contributions may change each fiscal year based on ASRS actuarial evaluation.

SECTION 4.3: ABSENCE FROM WORK

Absence from work is subject to supervisory approval. All requests for absence from scheduled work should be submitted to the employee's supervisor with as much advanced notice as possible prior to the beginning of the absence or as soon as possible for emergencies. The request must be submitted and approved by the employee's supervisor. This applies to paid and unpaid absences.

A. **Unexcused Absences:** An employee who is absent from duty for any period of time without supervisory approval is considered to have an unexcused absence and subject to disciplinary action. An unexcused absence of three (3) or more consecutive work days is considered to be abandonment of PMGAA employment and will be treated to have voluntarily resigned his/her position as of the end of the employee's scheduled shift on the third day.

B. **Paid Absences:** The time an employee is absent from work but receiving pay is considered paid time off. The following fall under this category: observance of a holiday, vacation, sick, flex time, personal time, jury/witness duty, and administrative leave. An employee on paid time off shall be paid at their effective rate of pay (not including shift differential pay), unless otherwise noted. All paid time off can be taken in quarter (¼) hour increments.

SECTION 4.4: HOLIDAYS

A. **PMGAA Observed Holidays**: New Year's Day, Martin Luther King Day, President's Day, Memorial Day, Independence Day, Labor Day, Veteran's Day, Thanksgiving Day, Day after Thanksgiving, Christmas Eve, and Christmas Day.

B. **Observation of Holidays**: When the holiday falls on a Sunday, it will be observed on the following Monday. When a holiday falls on a Saturday, it will be observed on the preceding Friday. For continuous, seven day operations, or work schedules that include a Saturday and/or Sunday, the holiday shall be observed on the calendar day of the holiday.

C. **Holiday Pay**: Every full-time and part-time benefited employee will receive pay for his/her regular scheduled workday (at a max of 12 hours) for every holiday observed by PMGAA. When a holiday falls on the employee's scheduled day off, the employee will be allowed to use that day as an alternate holiday, unless otherwise determined by the department as stated below. This alternate holiday must be used by the end of the fiscal year and shall not carry over, unless otherwise approved by the Executive Director.

    1. In select areas, when a holiday falls on the employee's scheduled day off, non-exempt employees will be paid for that day. This is determined by the Department Director based on business needs.

2. A non-exempt employee who works on an observed holiday shall, in addition to holiday pay, receive pay for all hours worked on the holiday at the rate of one and one-half (1 ½) times his/her regular rate of pay.

3. **Holidays during Paid Leave**: Full-time and benefited part-time employees on PMGAA paid leave when a holiday occurs will receive the holiday pay and this holiday time off will not be charged as vacation or sick leave.

4. **Holidays during Unpaid Leave**: An employee who is on an authorized unpaid leave of absence shall not be paid holiday pay unless the employee works on the employee's scheduled workday either the day before or the day after the holiday. The employee's holiday bank will then be reduced by the applicable number of hours that the holiday would have been paid at.

5. **Starting Employment**: If an employee's first day of employment is the day after a holiday, the employee will not receive pay for the holiday.

6. **Terminating Employment**: If an employee's last day worked (employment termination day) is on the day before a holiday, the employee will not receive pay for the holiday. All unused alternate holiday time, not taken by the last day of employment, will be forfeited.

SECTION 4.5: VACATION

A. **Accrual:** Employees will accrue vacation leave based on their most recent hire date, in accordance with the following schedule:

Full-time Employees	**Vacation Accrual**
Fewer than two years	Eight hours per month
Two to five years	Ten hours per month
Five to ten years	Twelve hours per month
Ten to fifteen years	Fourteen hours per month
Fifteen or more years	Sixteen hours per month

Benefited Part-time Employees	**Vacation Accrual**
Fewer than two years	Four hours per month
Two years to five years	Five hours per month
Five to ten years	Six hours per month
Ten to fifteen years	Seven hours per month
Fifteen or more years	Eight hours per month

1. An employee shall not accrue vacation hours for any pay period in which the employee has been on unpaid leave for 15 hours or more. ~~four (4) week period in which the employee has been on unpaid leave for more than three (3) workdays, including unpaid holidays.~~
2. If a full-time employee works a regular schedule of less than 40 hours per week their accrual rate will be prorated based on the number of hours worked per week.

3. For partial months of employment, vacation hours will be accrued on a prorated basis.

4. The date for change in the accrual rate is the first day of the complete pay period immediately following the anniversary date of continuous employment.

5. For the purpose of determining the date of change in number of hours per month, accrual of vacation hours will be by continuous employment after the employee's most recent hire date, as provided in state and federal laws including the Family and Medical Leave Act (FMLA) Policy, military service pursuant to U.S. DOL USERRA or ARS. 26-168, 26-171, or 38-610 and any special leave without pay of thirty (30) days or less. If a special leave without pay exceeds thirty (30) days, the excess days over thirty (30) shall not be counted as continuous employment.

B. **Accrual Maximum**: The maximum accumulation of vacation hours that can be carried over into the next fiscal year is two hundred forty (240) hours for full-time employees and one hundred twenty (120) for benefited part-time employees. An employee who has in excess of two hundred forty (240) hours for full-time employees and one hundred twenty (120) hours for part-time employees on June 30th of each year will be paid for the excess amount of time after June 30th, provided the full-time employee has taken eighty (80) hours vacation time and the part-time employee has taken forty (40) hours during the fiscal year. If the employee has not taken the required amount of time during the year, all excess time shall be forfeited.

C. **Use of Vacation Hours**:

1. Eligibility to use accrued vacation hours shall begin after the employee has completed ninety (90) days of employment from his/her most recent hire date unless a written request was submitted and signed by Human Resources prior to the most recent hire date.

2. Vacation leave may be taken at any time approved by the employee's supervisor.

3. All previously approved absence requests are subject to supervisor revocation if required by operational considerations. However, every effort shall be made to avoid any adverse financial or personal impacts on employees as a result of having their "approved" absence revoked.

4. Vacation leave shall not be advanced to an employee nor may vacation leave be transferred between employees

5. Depending on the incident, an employee who becomes ill during a scheduled vacation may change vacation days to sick days with authorization from the Department Director and Human Resources.

D. **Vacation Hours at Separation:** A full-time or part-time employee, who separates from the Airport Authority service by termination, resignation, retirement, layoff, or death, shall be paid for all unused vacation hours accrued. An employee who separates from employment for any reason before the completion of ninety (90) days service from his/her most recent hire date shall forfeit all accrued vacation hours.

SECTION 4.6: SICK LEAVE

A. **Accrual**: Employees will accrue sick leave in accordance with the following schedule:

Airport Authority Employees	Sick Leave Accrual
Fulltime Employees	Eight hours per month
Benefited Part-time Employees	Four hours per month
Non-Benefited Part-time Employees	One hour for every 30 hours worked to a max of 40 hours accrued per year

1. For partial months of employment, sick hours will be accrued on a prorated basis.

2. An employee shall not accrue sick hours for any pay period in which the employee has been on unpaid leave for 15 hours or more.~~four (4) week period in which the employee has been on unpaid leave for more than three (3) workdays, including unpaid holidays~~.

B. **Accrual Maximum**: The maximum accumulation of sick leave is one thousand forty (1,040) hours for full-time employees and five hundred twenty (520) hours for part-time employees.~~.~~ Any sick leave accrued in excess of the maximum accumulation of one thousand forty (1,040) hours or five hundred twenty (520) hours, shall be automatically converted to vacation leave on the basis of one (1) hour of vacation leave for every two (2) hours of excess sick leave accrued.

C. **Use of Sick Leave**:

1. Eligibility to use accrued sick leave hours shall begin on the date after the end of the pay period in which it is accrued.

2. Sick leave may be taken at any time approved by the employee's supervisor. The employee must notify his/her immediate supervisor a minimum of one (1) hour prior to the beginning of the work shift, unless the employee is unable to do so due to circumstances beyond the employee's control. Failure to report within the specified time period may result in the employee being docked a day's pay and subjected to disciplinary action.

3. Sick leave is available time off with pay for periods of an approved absence for an employee due to:

   a. Illness or injury, which renders the employee unable to perform the essential functions of the position.

   b. Disability caused by pregnancy, childbirth, or miscarriage.

   c. Examination or treatment by a licensed health care practitioner.

   d. Absence due to domestic violence, sexual violence, abuse, or stalking.

   e. Illness, injury, examination, or treatment of a member of the employee's immediate family by a licensed health care practitioner. For the purpose of this section the term immediate family means

the employee's spouse, committed partner, child, stepchild, parent, stepparent, grandparent, mother-in-law, father-in-law, sister, sister-in-law, brother, brother-in-law, son-in-law, daughter-in-law, stepparent-in-law, grandchild and minor child or an adult for whom the employee is a legal guardian.

4. Once the employee has been out on sick leave for three or more consecutive work days, a supervisor, in conjunction with Human Resources, may require submission of evidence from a licensed health care practitioner substantiating the need for sick leave.

5. The supervisor, in conjunction with Human Resources, may require the employee to obtain written approval from the licensed health care practitioner as to the employee's fitness for duty and if employee has any work restrictions prior to the employee's returning to work.

6. A supervisor, in conjunction with Human Resources, may require an employee to be examined by a licensed health care practitioner designated by the Airport Authority. If the licensed health care practitioner determines that the employee should not work due to illness or injury, the supervisor may place the employee on sick leave. If the licensed health care practitioner determines that the employee can return to work but cannot perform the essential functions of his/her position, the Airport Authority will investigate a possible reasonable accommodation for the employee. The Airport Authority shall pay for all examinations directed by and required by the Airport Authority. The employee shall not be charged any leave while participating in or traveling to or from any examination required pursuant to this paragraph.

7. For all illness-related absences, sick leave will be used first followed, if needed, by vacation leave. After the sick and vacation leave time is used, the employee will then go on unpaid status, and may be considered for discharge for inability to perform the essential functions of his/her position other than as protected by state and federal laws or request a special leave without pay.

~~7.~~8. A supervisor, in conjunction with Human Resources, may send an employee home who is reasonably believed to be ill at work. In these instances, the employees sick time will be used first, followed by, if needed and with supervisory approval, other forms of paid time off or unpaid status.

~~8.~~9. A supervisor receiving a request from an employee requesting and/or using sick leave that spans three or more consecutive workdays must notify Human Resources. This information may be necessary to allow the Airport Authority to comply with the federal Family and Medical Leave Act (FMLA).

D. **Sick Leave Hours at Separation**:

1. **Termination**: An employee who terminates Airport Authority service for any reason other than retirement or disability shall forfeit all accumulated sick leave.

2. **Retirement/Death**: An employee who retires from Airport Authority service or dies -shall be compensated for accumulated sick leave at the rate of fifty (50) percent of the accumulated sick leave hours at the employee's current base rate of pay.

3. **Disability Termination**: For an employee that terminates employment because of his/her disability as defined in The Americans with Disability Act (ADA) Amendments Act, at the discretion of the Executive Director on a case-by-case basis, a determination will be made as to whether he/she will be compensated for accumulated sick leave. If the determination is that the employee is to be

compensated, he/she will be compensated at the rate of fifty (50) percent of the accumulated sick leave hours at his/her current base rate of pay

E. **Sick Leave Donation**: Phoenix-Mesa Gateway Airport Authority offers a sick leave donation program for employees who has successfully completed the new hire probationary period. (See Organizational Policy #400.15 Sick Leave Donation Program.)

SECTION 4.7: BEREAVEMENT LEAVE

In the event of a death in the immediate family of an employee, the full-time or benefited part-time employee may be granted three (3) days of leave and bereavement pay. For the purpose of this section the term immediate family is defined as employee's spouse, committed partner, child, stepchild, mother, father, sister, brother, stepparent, mother-in-law, father-in-law, brother-in-law, sister-in-law, stepparent-in-law, grandparent, grandparent-in-law, grandchild, aunt, uncle, daughter-in-law, and son-in-law.

Before the leave or upon return to work, the employee must record his/her absence as Bereavement Leave and submit the request to his/her supervisor. Proof of death and relationship to the deceased may be required. If an employee requires leave beyond the allotted three (3) days, it will be charged to sick or vacation.

SECTION 4.8: WORKERS COMPENSATION LEAVE

A. Workers' compensation is governed by the laws found in Article 18, Section 8 of the Arizona State Constitution, Chapter 6 of Title 23 of the Arizona Revised Statutes (A.R.S.) 23-901. The Industrial Commission of Arizona (ICA) administer and enforce all applicable laws and regulations not specifically delegated to others, relative to the protection of life, health, safety, and welfare of employees within the state.

B. An employee who sustains a job-related injury or illness is required to report the incident to their supervisor or Human Resources and may be eligible for workers' compensation benefits in accordance with the State of Arizona law.

C. An employee who is absent from work due to a job-related injury or illness will have this time designated as Family Medical Leave (FMLA). During the period of worker's compensation leave, the employee's vacation and sick leave accrual will cease and ~~merit~~ performance-based increases shall not be granted.

SECTION 4.9: JURY OR WITNESS LEAVE

A leave of absence for jury duty will be granted to any full-time or part-time employee who has been notified to serve. Employees receive jury duty or witness pay if summoned on scheduled work days/hours. The employee shall be granted paid Jury Duty or Witness Leave for a maximum of thirty (30) work days per year. If an employee is subpoenaed to testify as a witness in an Airport Authority-related case or hearing, this time will be considered work time.

SECTION 4.10: ELECTION LEAVE

An employee must request an election leave accommodation to vote at least one (1) day before Election Day. On days when elections for public office and all primary and general elections are scheduled throughout the state, county, city, or town in which the employee works, schedules will be changed as needed to ensure that work either starts at least three (3) hours after the polls open or ends at least three (3) hours before polls close. An employee living in other localities or states will need to inform his/her supervisor in advance if he/she expects any conflict between his/her work schedule and the exercise of voting rights. No employee will be penalized or retaliated against for requesting time off to vote.

SECTION 4.11: MILITARY LEAVE

The Airport Authority complies with the requirements of the Uniformed Services Employment and Reemployment Rights Act (USERRA) and all other state, federal and local laws regarding military leave. (See Organizational Policy #400.11 – Military Leave)

SECTION 4.12: SPECIAL LEAVE

A special leave is any absence from work in excess of thirty (30) consecutive calendar days that is not covered by the FMLA or Military Leave. In addition, a special leave is any additional time-off required after exhaustion of FMLA. Special leave includes, but is not limited to extended use of paid and unpaid time off, leave for a non-FMLA eligible employee, or leave for a non-FMLA eligible circumstance. Special leaves may be for a medical or non-medical condition.

A. **Approval**: All requests for special leave must be approved in advance and in writing by the employee's department director and the Human Resources Director. The initial approval period for special leave duration will be for a period of twelve (12) weeks or less. The Executive Director may approve extensions of special leaves for more than twelve (12) weeks.

B. **Use of Time**: An employee may be required to exhaust any available paid time off categories prior to using unpaid time.

C. **Return to Work**:

1. An employee who is able to return to work after a period of special leave may be approved to return to a position in the class held at the start of the special leave, if such a position is available and funded. If such a position is not available and funded, the employee may be terminated.
2. An employee returning from special leave must notify Human Resources at least two (2) business days prior to the scheduled return. If the conditions for the leave change, the employee must notify Human Resources as soon as possible.

D. **Insurance Premiums**: An employee on unpaid special leave may be responsible for the payment of the entire insurance premium for his/her and dependent(s) coverage.

SECTION 4.13: FAMILY MEDICAL LEAVE (FMLA)

The Airport Authority supports and complies with the federal Family and Medical Leave Act of 1993 (FMLA), as amended. (See Organizational Policy #400.05 - Family and Medical Leave).

SECTION 4.14: TRAINING AND DEVELOPMENT

The Airport Authority offers a variety of training and development opportunities in order to assist an employee in performing his/her position more productively, preparing for future responsibilities, and

encouraging self-improvement and growth. These educational opportunities may be available as internal and/or external training.

A. **Responsibility and Availability**: Supervisors, managers or directors and Human Resources have joint responsibility to ensure that all employees receive necessary training. The Airport Authority may reimburse an employee for certain expenses incurred when he/she successfully completes an external position-related course with prior approval.

B. **Required Training**: The Airport Authority shall pay all costs associated with the attendance by an employee at any course, seminar, or workshop required of the employee by the Airport Authority. The employee shall not be charged any type of leave while in attendance at such a course. The employee shall be considered to be on duty while at the course and for travel time proceeding to and from the course. Travel time does not include an employee's normal commute to and from his/her regular worksite for departure to the training. Hours worked for training that requires out-of-town travel and/or an overnight stay, for a non-exempt (hourly) employee will be determined in compliance with the Fair Labor Standards Act (FLSA) hours worked regulations.

SECTION 4.15: TUITION REIMBURSEMENT

Eligibility: To qualify for tuition reimbursement, an employee must have successfully completed the new hire probation period and be classified as a full-time employee prior to enrolling in the course. (See Organizational Policy #400.10 – Tuition Reimbursement)

V. WORKPLACE STANDARDS

SECTION 5.1: EMPLOYEE CONCERNS

Phoenix-Mesa Gateway Airport Authority (PMGAA) is committed to maintaining a formal mechanism that allows employees to resolve misunderstandings and preserve positive relations between management and other employees. Employees and supervisors shall, to the greatest extent possible, work cooperatively together to resolve work-related concerns. If an employee is unable to resolve a work-related concern, or he/she feels there is a perceived misapplication of written Airport Authority rules or policies, the employee is encouraged to bring this concern to the appropriate chain of command or to the Human Resources Director for review.

SECTION 5.2: RESPECTFUL WORKPLACE

Phoenix-Mesa Gateway Airport Authority is committed to providing and maintaining an environment conducive to the safety and health of its employees, tenants, and customers. PMGAA prohibits harassment, sexual harassment, illegal discrimination, gender bias, workplace violence, or unlawful activity as defined by state and federal law, including Title VII of the Civil Rights Act, the Age Discrimination Act, and the Americans with Disabilities Act. (See Organizational Policy #400.01- Anti-Harassment and Discrimination Policy)

SECTION 5.3: ALCOHOL AND DRUG FREE WORKPLACE

Phoenix-Mesa Gateway Airport Authority is committed to providing a workplace free of drugs and alcohol. PMGAA will conduct alcohol, drug, and/or controlled substances testing under all circumstances required by federal or state law. In addition, PMGAA may conduct substance abuse testing when permitted by law which may include, but is not limited to: pre-employment or pre-placement testing, reasonable suspicion testing,

random testing, post-accident testing, and follow up testing. (See Organizational Policy #400.14 – Alcohol and Drug Free Workplace)

SECTION 5.4: SMOKE FREE WORKPLACE

Phoenix-Mesa Gateway Airport Authority prohibits smoking including vaping in all Airport operated facilities and vehicles. Smoking and vaping is prohibited within twenty (20) feet of the Airport operated building entrances, from the gathering of non-smokers, and where appropriate signage is posted in enclosed areas. This complies with the City of Mesa ordinance entitled Smoking Regulations and Healthier Smoke Free Environments, under Title 6, Chapter 11 of the Mesa City Code and the Smoke-Free Arizona Act.

SECTION 5.5: PROBATION

All new employees and employees receiving a promotion or demotion shall serve a six (6) month probation period, during which an employee's performance in the new position is evaluated. The successful completion of the probationary period should not be construed as creating a contract or as guaranteeing employment for any specific duration or as establishing a just cause termination standard. Employment with the Airport Authority remains at-will, that is the Airport Authority may terminate an employee, or an employee may terminate his/her employment, with or without cause, and with or without notice, at any time.

SECTION 5.6: PERFORMANCE EVALUATIONS

All Airport Authority employees shall receive a performance evaluation annually based on a common review date. In conjunction with the annual performance evaluation, an employee may become eligible for consideration of a ~~merit~~ performance-based pay increase when applicable and based on the fiscal year budget. (See Organizational Policy #400.06 - Performance Evaluations)

SECTION 5.7: CHANGES IN ASSIGNMENT

A. **Promotion**: A posted promotional opportunity is open to an employee(s) who meets the minimum qualifications. On occasion, a posted promotional opportunity may be limited to employees in specific positions or departments.

   1. An employee who is promoted typically receives an increase in pay rate which is five percent (5%) higher than his/her previous pay rate, or the minimum pay rate of the new pay range; whichever is greater. Increases greater than five percent (5%) shall be approved by the Executive Director unless it is to bring them to the minimum pay rate of the new pay range. If the date of promotion ~~an employee's performance evaluation date in the former position~~ falls within thirty (30) days of the common review date~~date of promotion~~, the employee shall receive both the performance ~~merit~~ increase based on the fiscal year budget and the promotional increase unless the promotional increase is greater than 8%.

   2. An employee who is on disciplinary probation may not be considered for promotional opportunities.

   3. An employee who has been demoted for cause may not be considered for a promotion until ninety (90) days after the effective date of the demotion.

B. **Criteria-Based Promotion**: An employee may be promoted from one class to another class (with a higher maximum pay range) in a class series based on pre-approved criteria, without a competitive examination, with the approval of the Department Executive.

1. An employee who is promoted through a criteria-based promotion typically receives an increase in pay rate which is five percent (5%) higher than his/her previous pay rate, or the minimum pay rate of the new pay range; whichever is greater. Increases greater than five percent (5%) shall by approved by the Executive Director unless it is to bring them to the minimum pay rate of the new pay range.

2. If the criteria-based promotion falls within thirty (30) days of the common review date, the employee shall receive both the performance ~~merit~~ pay increase based on the fiscal year budget and the promotional increase unless the promotional increase is greater than 8%.

3. An employee who is on disciplinary probation is not eligible to be considered for a criteria-based promotion.

~~3.~~

C. **Demotion**: It shall be considered a demotion when an employee moves from one classification to another in a lower pay grade. An employee may be demoted, with the approval of the Department Executive, for inability of the employee to meet the requirements of the employee's position; at the request of the employee; and/or for the convenience of the Airport Authority. (See section 5.12 for Disciplinary Demotion)

1. When appropriate, an employee who is demoted for failing to meet the requirements of the position may be demoted to a formerly held position, if available, and the employee's pay rate shall be returned to the pay rate of his/her formerly held position.

2. An employee who requests a demotion shall be paid at a rate within the positions pay range unless otherwise approved by the Executive Director.

3. An employee demoted for the Airport Authority's convenience typically will continue to receive the same pay rate as before the demotion. If this pay rate is higher than the maximum of the new position's pay range, the employee's pay rate will be "frozen" until the pay range for the new position reaches the employee's pay rate, at which point the employee will again be eligible for pay rate increases.

4. An employee demoted shall be placed on a six (6) month probation period~~ and a new annual performance evaluation date based on the effective date of the demotion~~.

D. **Transfer**: Management will make final decisions regarding transfers in conjunction with Human Resources. The transferred employee may maintain the same ~~Performance Evaluation~~common review date~~ as prior to the transfer~~. However, if the duties and responsibilities are sufficiently different from those previously performed, the employee may be placed on a six (6) month probation period.

1. **Compensation:** The pay rate of an employee whose position is transferred from one classification to another classification having the same pay range shall remain the same unless approved by the Executive Director.

2. **Intra-Department Transfer:** An employee may be transferred to a different position within the same department with the same pay range, with the approval of the Department Director and notification to the Human Resources Director.

3. **Inter-Department Transfer:** An employee may be transferred to a position in a different department with the same pay range with the approval of both the current and prospective director

or manager, and with notification to the Human Resources Director. Each transfer is determined on an individual basis, depending on the needs of both departments involved.

4. **Reason for Transfer:** An employee may be transferred at the employee's request, or for the convenience of the Airport Authority.

5. **Qualifications**: A transferred employee must meet the minimum qualifications for the class to which the employee may be transferred.

E. **Special Assignments**: With the approval of the Department Executive, an employee may be placed on a special assignment for assuming higher level job responsibilities for a period of greater than one month.

1. **Compensation:** An employee placed on special assignment shall receive a five (5%) salary increase to compensate the employee for the higher-level work performed. The Executive Director may approve more than a five (5%) increase in pay.
2. **Duration:** No special assignment shall extend beyond a period of one (1) year unless approved by the Executive Director.

3. **Review Date:** During the period of a temporary assignment, the employee~~'~~s continues in the common review date schedule~~Performance Evaluation date does not change~~, and ~~the employee~~ continues to be eligible for performance-based ~~receive merit~~ pay increases based on the pay range established and fiscal year budget for the employee's regular position.

SECTION 5.8: SEPARATIONS

A. **Resignation**: It is customary for an employee in good standing who wishes to resign, to submit written notice at least two (2) weeks in advance.

1. At the Executive Director's sole discretion, an employee who has submitted a notice of resignation may be required to cease working for the Airport Authority immediately.

2. An employee who has submitted a resignation may submit in writing a withdrawal of resignation. The decision to accept the withdrawal will be based on the consent of the director, the Human Resources Director, and the Executive Director.

3. An employee who is unable to work due to a medically certified disability may apply for long-term disability if eligible. This application shall be treated as the resignation from PMGAA employment.

B. **Reduction in Workforce**: The Executive Director may institute a layoff of employees due to lack of funds, lack of work, or any other business reason. The Executive Director shall determine the timing and number of employees to be laid off. Layoff will be performed in a manner which best facilitates the reason(s) behind the layoff. Upon approval of the Executive Director, an employee subject to layoff may be transferred to a vacant position.

SECTION 5.9: STANDARDS OF CONDUCT

A. In addition to the conduct prohibited to all Arizona public employees by Arizona Revised Statutes, a violation of the Standards of Conduct listed below is cause for discipline up to and including termination. The following list of examples is not inclusive of every act that may be subject to disciplinary action up to and including termination:

1. Incompetence or inefficiency in the performance of duties.

2. Violation of any policy or procedure, lawful or official regulation or order.

3. Failure to obey lawful and reasonable directives given by management.

~~3.~~4. Abusiveness in attitude, language, or conduct to the public or fellow employees.

~~4.~~5. Being absent from work without authority or having excessive absences that effect productivity, the efficiency or effectiveness of the department, or impedes the work unit.

~~5.~~6. Participation in unlawful or improper conduct that adversely affects an employee's relationship to the position, position's duties, to other employees, or that in any way discredits the Airport Authority's reputation or goodwill in the community.

~~6.~~7. Engaging in unlawful harassment or discriminatory conduct against another individual on the basis of race, color, gender, religion, national origin, age, disability, veteran status, or genetics or engaging in retaliation against another for filing a complaint or participating in any investigation.

~~7.~~ Conviction of a felony, failure to report a felony or misdemeanor conviction, and/or failure to report any felony arrest. ~~or conviction of a misdemeanor involving moral turpitude.~~ Employees are required to report a felony arrest and a felony misdemeanor conviction to Human Resources or their supervisor upon the start of the employee's next scheduled workday following the conviction or arrest.

8. Jeopardize safety or to place oneself or another individual in an unsafe environment.

9. Falsify, misuse, or provide unauthorized use of Airport Authority documents or records, make false statements concerning duties with the Airport Authority, or use of misrepresentation to obtain a position with the Airport Authority.

10. Steal, damage, misuse, or misappropriate property, products, or equipment that belong to the Airport Authority, other employees, or visitors due to negligence or willful misconduct.

11. Commit fraud or other illegal acts regarding interfacing with or the use of the Airport Authority funds.

12. Possession of unauthorized firearms, dangerous items, weapons, or explosives on Airport Authority property.

13. Failure to maintain minimum standards, licenses, or qualifications required for one's position.

SECTION 5.10: ADMINISTRATIVE LEAVE

An employee may be placed on administrative leave with the approval of the Executive Director and the Human Resources Director. Administrative leave is to be used when the circumstances warrant the employee be temporarily relieved from his/her duties pending an investigation or administrative process. While on administrative leave, the employee will be paid their regular pay and is expected to follow departmental direction concerning requirements for leave time. Failure to comply and depending upon the circumstances and violations the employee may be subject to disciplinary action up to and including termination.

SECTION 5.11: DISCIPLINARY ACTIONS

Phoenix-Mesa Gateway Airport Authority utilizes disciplinary actions for employees who have committed infractions of employer policies and procedures. Depending upon the circumstances, violations may be subject to disciplinary action, up to and including termination of employment including immediate discharge from employment without prior warning or notice. This policy should not be construed as requiring the Airport Authority to use progressive discipline, or as a limitation on the right of the Airport Authority to take disciplinary action. Typically, actions taken against an employee may be any of the following:

A. **Written Reprimand**: A supervisor, manager or director may deliver a written reprimand to an employee as documentation to make the employee aware of unacceptable conduct or performance or for a violation of Airport Authority policies or procedures.

B. **Disciplinary Probation**: An employee may be placed on disciplinary probation, with the approval of the Department Executive, for unacceptable conduct or performance or for violation of Airport Authority policies or procedures.

   1. Disciplinary probation will be up to twelve (12) months and cannot be extended beyond its original length. The probation can be ended early based on demonstrated improvement, with the approval of the Department Executive.

   2. While on disciplinary probation, an employee will not be allowed to compete for any promotional opportunity and will not be eligible for any salary increases. Once the employee is removed from disciplinary probation they may be eligible for a ~~merit~~ performance-based increase at the~~ir~~ next scheduled common review date~~annual review~~ based on performance and budget availability.

   3. The Executive Director can approve a reduction in pay along with the disciplinary probation, if recommended by management.

C. **Suspension**: The Department Executive can approve the suspension of an employee from the employee's position without pay, at any time for unacceptable conduct or performance or for violation of Airport Authority policies or procedures.

   1. Except in certain limited circumstances, an exempt employee may not be suspended for a period of less than one work week.

   2. A suspended employee shall typically be notified prior to the start of the suspension. An employee suspended may be placed on disciplinary probation for a period of up to one year.

D. **Demotion**: With the approval of the Executive Director, an employee may be demoted at any time for unacceptable conduct or performance or for violation of Airport Authority policies or procedures.

   1. An employee who is demoted for disciplinary reasons shall be paid at the highest level in the lower pay range that is at least five percent (5%) lower than the employee's salary prior to the demotion.

   2. An employee demoted will be placed in a position for which he/she is qualified.

   3. An employee demoted shall be placed on a six (6) month probation period and if the demotion is within three (3) months of the common review date, the employee will have to wait until the next year to be eligible for a performance-based review. ~~a new annual performance evaluation date based on the effective date of the demotion.~~

   4. An employee demoted for disciplinary reasons may not be allowed to compete for any promotional opportunity until ninety (90) days after the effective date of the demotion.

E. **Termination**: With the approval of the Human Resources Director and the Executive Director, an employee may be terminated from the Airport Authority service for any reason that the Airport Authority decides, in its sole discretion, justifies such an action.

Phoenix-Mesa Gateway Airport Authority
5835 S Sossaman Road
Mesa, Arizona 85212-6014
www.gatewayairport.com

Board Action Item

Re: Resolution 21-14

To:	**Board of Directors**
From:	**Doug Wirthgen, Information Technology Director**
Through:	**Chuck Odom, Chief Financial Officer**
	J. Brian O'Neill, A.A.E., Executive Director/CEO
Subject:	**Airport Common Use System Software & Maintenance Support**
Date:	**May 18, 2021**

Proposed Motion

To authorize a 5-year contract with Amadeus Airport IT Americas, Inc. (Amadeus) for airport common use system Software and Maintenance in an amount not to exceed $246,381.48 for three years with (2) one year renewal options not to exceed $87,103.34 and $89,716.43 each year respectively.

Narrative

In November 2015, the Board authorized the replacement of the existing airport common use system with the Amadeus common use system. As part of the strategic direction of the airport, increased attention and commitment is being placed on providing essential technology systems and services to ensure cost effective support operations. The software with this common use system requires annual software and maintenance support.

Board authorization for the purchase of the Amadeus annual software and maintenance support is necessary to continue use of the Amadeus common use system software.

In compliance with the Airport's Procurement Policy No. 19-27, purchases excluded from multiple quotations/competitive selection requirements include hardware and software licensing renewals and maintenance support.

Fiscal Impact

The annual Year 1 amount is budgeted in the FY22 ITS Operating Budget. Years 2 – 5 operating costs will be budgeted in the appropriate year.

Attachment(s)

Contract

RESOLUTION NO. 21-14

WHEREAS, the Phoenix-Mesa Gateway Airport Authority ("Authority"), a joint powers airport authority formed pursuant to Arizona Revised Statute §28-8521 *et seq.* owns and operates the Phoenix-Mesa Gateway Airport ("Airport"); and

WHEREAS the Authority desires to authorize a 5-year contract with Amadeus Airport IT Americas, Inc. (Amadeus) for airport common use system Software and Maintenance in an amount not to exceed $246,381.48 for three years with (2) one year renewal options not to exceed $87,103.34 and $89,716.43 each year respectively.

NOW, THEREFORE, BE IT RESOLVED by the Board of Directors of the Authority as follows:

> **The Board of Directors of the Authority hereby authorizes a 5-year contract with Amadeus Airport IT Americas, Inc. (Amadeus) for airport common use system Software and Maintenance in an amount not to exceed $246,381.48 for three years with (2) one year renewal options not to exceed $87,103.34 and $89,716.43 each year respectively. This resolution also authorizes the Chair or Executive Director/CEO to execute such contract, with such insertions, deletions, and changes as may be approved by the Chair or Executive Director/CEO, necessary to carry out the purposes and intent of this Resolution.**

Passed and adopted by the Authority this 18th day of May, 2021.

Gail Barney, Chair

ATTEST:

Misty Johnson, Clerk of the Board

APPROVED AS TO FORM:

Jill Casson Owen, Attorney

Maintenance, Technical Support and Warranty Agreement

Phoenix Mesa Gateway Airport Authority (PMGAA)

Table of Contents

1. Agreement Overview 3

Annual Pricing 3

2. Terms and Termination 4

3. Software Maintenance 4

4. Technical Support Services 5

Technical Support Services – Roles and Responsibilities 5

5. Response Escalation 5

First Level Support (PMGAA) 6

Amadeus Second Level Support (SMC) 6

Amadeus Third Level Support (Implementation) 7

Amadeus Fourth Level Support (Research and Development) 7

6. Response Times 7

7. Warranty 9

8. Additional Clauses 9

9. Agreement 13

Exhibit A – Software License and Warranty 14

Exhibit B – 2021 Labor Rates 19

© 2021 Amadeus IT Group and its affiliates and subsidiaries

Document control				
Security level	Confidential and Restricted			
Company	Amadeus Airport IT Americas, Inc.			
Department	Contracts			
Author	Crystal Carvalho			
Reviewed by	Sharon Abate		Date	04/29/2021
Approved by	Eric Napoli		Date	04/29/2021
Version	Date	Change	Comment	By
07	04/29/2021	Legal language	Final	Crystal Carvalho

1. Agreement Overview

This Maintenance, Technical Support, and Warranty Agreement provides Phoenix Mesa Gateway Airport Authority (PMGAA) with maintenance and Amadeus expert-level technical support services that augment Phoenix-Mesa Gateway Airport's (AZA) own onsite troubleshooting and support of issues. In addition, it provides PMGAA much needed reassurance that PMGAA has Amadeus' full support resolving critical issues discovered during normal operations or with any emergency situations impacting PMGAA's operations.

Annual Pricing

Amadeus agrees to provide the services detailed in this agreement for the fixed costs listed below.

Item	Annual Price				
AZA Support Agreement Cost Sheet					
Maintenance, Technical Support Services, and Warranty	Year 1 6/1/21-5/31/22	Year 2 6/1/22-5/31/23	Year 3 6/1/23-5/31/24	Year 4 6/1/24-5/31/25	Year 5 6/1/25-5/31/26
EASE/EASE-FX Software and 24 x 7 Help Desk Support	$59,034.45	$60,805.48	$62,629.65	$64,508.54	$66,443.79
FIDS Software	$6,584.79	$6,782.33	$6,985.80	$7,195.38	$7,411.24
RMS Software	$6,955.59	$7,164.26	$7,379.19	$7,600.56	$7,828.58
VPS Software	$2,500.00	$2,575.00	$2,652.25	$2,731.82	$2,813.77
Software Total	$75,074.83	$77,327.07	$79,646.89	$82,036.30	$84,497.38
Subtotal Support Costs	$75,074.83	$77,327.07	$79,646.89	$82,036.30	$84,497.38
Maintenance, Technical Support Services, and Warranty	Year 1 6/1/21-5/31/22	Year 2 6/1/22-5/31/23	Year 3 6/1/23-5/31/24	Year 4 6/1/24-5/31/25	Year 5 6/1/25-5/31/26
[1]LDS Software	$4,637.06	$4,776.17	$4,919.46	$5,067.04	$5,219.05
Total Support Costs	$79,711.89	$82,103.24	$84,566.35	$87,103.34	$89,716.43

[1] PMGAA has the option to purchase the LDCS Software Maintenance, Technical Support Services at the beginning of any Agreement year, at the then current Annual Price, without having to pay any past years Annual Price.

© 2021 Amadeus IT Group and its affiliates and subsidiaries

Item	Price (each incidence, inclusive)
Other Support Services	
Addition of an Airline to the PMGAA Environment – Remote Install	$3,000
Addition of an Airline to the PMGAA Environment – Onsite Install	$6,000

2. Terms and Termination

This agreement is effective June 1, 2021

1. All prices quoted are in US Dollars.
2. This Agreement shall be valid for three (3) years, expiring on May 31, 2024 ("Base Term"). This Agreement has two (2) optional one-year extensions that PMGAA may exercise as its sole discretion. Prior to the expiration of the Agreement Base Term, PMGAA may elect to extend the Agreement. If PMGAA exercises such right, all terms, conditions and provisions of the original Agreement shall remain the same and apply during the extended period with the possible exception of price. Any extension of this Agreement shall require an Amendment signed by both parties.
3. Warranty, Maintenance and Technical Support Services Pricing for the services detailed in this Agreement for subsequent years after Year 1, shall escalate 3% each year based on the Pricing stated above.
4. In the event PMGAA increases the quantities of devices or systems to be covered, Amadeus shall propose adequate support personnel and associated costs to provide the same level of support described. In the event PMGAA increases the quantities or systems to be covered and does not accept Amadeus' proposed support personnel requirements or associated cost to provide the same level of support, Amadeus will not guarantee the level of support described.
5. There are no liquidated damages provisions in this agreement.
6. Support is defined as software warranty support and 24x7 Help Desk support.
7. Software shall mean all the software listed in the Annual Pricing Table.

3. Software Maintenance

1. Maintenance shall include updates which may incorporate bug fixes, and or new features. During the time that the Software is under Amadeus maintenance, Amadeus shall maintain the original functionality by:
   1.1. Correcting or replacing the Software or any component or module and provide services necessary to remedy any defect. Such correction, replacement or service

© 2021 Amadeus IT Group and its affiliates and subsidiaries

shall be accomplished within the time frames set forth in this Contract once PMGAA has identified and notified Amadeus of any such error; and

1.2. Supplying updated user guides as necessary for PMGAA to maintain complete and current documentation of the use of the Software.

2. PMGAA-Requested Enhancements. PMGAA requests for enhancements to the Licensed Program will be reviewed by Amadeus and disposed of in one of the following ways: (1) Accepted for development and inclusion in a future release at no direct cost, (2) Accepted for development with a price proposal to PMGAA as a "Customization", or (3) Rejected, with an explanation.

2.1. PMGAA-Requested Enhancements determined to be "Custom" are offered at Amadeus' published hourly rates along with development costs at the time of the enhancement request.

2.2. Requirements for the enhancement must be confirmed in writing when an estimated cost, including estimated expenses, will be provided by Amadeus in the form of a scope of work addendum within a price proposal. A purchase order is required before commencement of development work.

4. Technical Support Services

This agreement provides PMGAA with Amadeus-provided technical support for the EASE/EASEfx/FIDS/RMS/VPS system installed at PMGAA 24/7, 365 days a year. Amadeus does not charge a separate "per-call" or "call-out" charge.

Technical Support Services – Roles and Responsibilities

The following are Amadeus' definitions of Amadeus Service Technician roles and responsibilities for each of the levels. All technical support inquiries should be directed towards Amadeus' 24/7/365 Help Desk via telephone at 1-305-499-6157 plus PIN.

5. Response Escalation

Amadeus will make every reasonable effort to adhere to the following response escalation plan. Amadeus' response escalation plan is based on problem severity levels, and the associated response time(s) specified in the Section below, as follows:

© 2021 Amadeus IT Group and its affiliates and subsidiaries

First Level Support (PMGAA)

PMGAA will respond to trouble calls reported by PMGAA Customers or Operations. PMGAA will create a trouble ticket or call Amadeus to investigate incidents reported.

In the event the PMGAA technician is unable to correct the problem in a reasonable timeframe (not to exceed 4 hours), or the problem is outside the scope of the work defined herein, the technician will immediately contact the appropriate support technicians for assistance.

If the trouble call cannot be resolved within one hour by First Level Support, PMGAA will escalate the ticket to:

- The Original Equipment Manufacturer unless component is under Amadeus hardware support.
- Escalate to other applicable organizations within the airport.
- Escalate with other external maintenance organizations to resolve the problem.
- Amadeus Support Services

When an outage exceeds, or is likely to exceed the Service Level, all affected Operation Contacts, will be notified.

In no event will more than two hours pass from receipt of a trouble ticket before it is escalated to Amadeus for Second Level Support.

Amadeus Second Level Support (SMC)

If First Level Support cannot resolve a problem within two (2) hours (not to exceed four (4) hours), or if the problem is found immediately to be not within First Level Support capability, the PMGAA staff will call and/or open a ticket with Amadeus for Second Level Support using Amadeus Customer Service Point (ACSP).

In the event Second Level Support is needed, the PMGAA technician will contact the appropriate Amadeus support center. Once an issue is reported to the Amadeus support center, an Amadeus Support Engineer will respond to all inquiries to begin the investigation process on the problem reported. This engineer is responsible for documenting all information related to the problem and opening a trouble ticket. The ticket number will be provided to the PMGAA IT staff. Once a solution is found for the reported problem, it will be tested and implemented to correct the problem at the site. After implementation, the resolution is documented for future reference and tracking purposes.

Amadeus' support engineer will remain directly involved in the trouble resolution, while updating airport staff.

© 2021 Amadeus IT Group and its affiliates and subsidiaries

Amadeus Third Level Support (Implementation)

If a problem is not resolved at second level from PMGAA's initial call to Amadeus, or determined to be a serious 'system down' issue, it will be elevated to Amadeus Third Level Support. Third Level Support combines Amadeus local support engineer, airport IT and operations management, along with Amadeus' implementation/development staff. The purpose of involving so many people at this level is to create a full support team whose primary focus is to resolve the trouble by committing all available resources and talents.

If it is determined that third level, onsite support is needed to resolve an issue, Amadeus will make reasonable efforts to travel onsite to correct the issue, at no additional cost to PMGAA.

Amadeus Fourth Level Support (Research and Development)

If a problem is not resolved at third level, it will be elevated to Fourth Level Support. Amadeus R&D Engineers will respond to escalated incidents reported according to the response times listed in the Response Times section of this document.

If it is determined that fourth level, onsite support is needed to resolve an issue, Amadeus will make reasonable efforts to travel onsite to correct the issue, at no additional cost to PMGAA.

6. Response Times

Amadeus will make every reasonable effort to adhere to the following response times.

Telephone response to the first call will be made within 30 minutes. Initial dial in to PMGAA in an attempt to resolve the ticket within the timeframes described below.

Amadeus' Help Desk can be reached via telephone at 1-305-499-6157 plus PIN, and also, by accessing the online portal – https://www.customerservicepoint.amadeus.com.

Amadeus will make reasonable efforts to correct the error or provide an acceptable, to PMGAA, workaround solution for each priority level and, if a workaround is the immediate solution, will make reasonable efforts to provide a final resolution of the error.

Support issues submitted, are prioritized utilizing the *severity* definitions listed below:

Severity	Description
Critical	Total Amadeus software application or functionality is down, corrupted or severely degraded (i.e. inoperable) in service, impacting a significant group of

© 2021 Amadeus IT Group and its affiliates and subsidiaries

Severity	Description
	users. An Amadeus application or functionality is down, corrupted or severely degraded (i.e. inoperable) in service, for a limited number of users and having a significant commercial impact on those users. No backup is available or no reasonable, automated workaround provided. All appropriate Amadeus technical resources are applied 24x7 until the incident is resolved.
Serious	Partial Amadeus software application or functionality is down (50%), severely corrupted or severely degraded in service, impacting a limited number of users. A system, an application or functionality is degraded for a significant group of users. Backup is not available or no reasonable, automated workaround provided. Amadeus resources are applied with top priority until the incident is recovered. May require additional hours. Fix may be applied without regression test.
Medium	Amadeus software are responding; however, there are technical issues which are affecting a user(s) in a negative manner. Example: Amadeus covered hardware or software technical issues; intermittent network outages.
Low	Amadeus software are operational; however, users may require assistance with a technical question. Example: Need new software installed.

Support issues will comply with the *resolution* times listed below:

Severity	Resolution Time (Business hours)	Resolution Time (After hours)
Critical	2 hours or less	2 hours or less
Serious	4 hours or less	4 hours or less
Medium	3 days or less	N/A
Low	4 days or less	N/A

NOTE: Resolution time(s) may be dependent on the services of an external provider. Information Systems will ensure that the resolution by an external provider is not delayed, however cannot guarantee the timeliness of the external provider's response.

NOTE: It is expressly noted that the resolution times are only applicable to the Amadeus Software. They specifically exclude resolution times outside the Airport Platform, Airport

© 2021 Amadeus IT Group and its affiliates and subsidiaries

Platform hardware and airport Local Area Network (LAN) and the Wide Area Network (WAN) and/or the Airlines' host(s).

The above measurements of availability for Amadeus will only be based on events within Amadeus' control (the core room equipment and user devices). If the measured item is not available due to reasons outside of Amadeus' control, such as but not limited to problems with the airline host, wide area network, local area network and or operator error, such non-availability will be excluded from the measurement of availability of the above items.

7. Warranty

Amadeus hereby warrants and represents to PMGAA as follows:

1. **Quality.** Amadeus will use industry standards to protect the Software, including all components, modules and source code from known malware, viruses, worms and Trojan horses. All work performed by Amadeus pursuant to this Agreement shall meet industry accepted standards of excellence and shall be performed in a professional and workman-like manner by staff with the necessary skills, experience and knowledge.

8. Additional Clauses

MODIFICATIONS

Any amendment, modification or variation from the terms of this Contract must be in writing and will be effective only after approval of all parties signing the original Contract.

ASSIGNMENT

Services covered by this Contract may not be assigned or sublet, in whole or in part, without first obtaining the written consent of PMGAA. An authorized assignee shall be deemed to have all the rights and obligations of the assigning Party. No assignment shall release the assigning Party from any of its obligations hereunder.

SUCCESSORS AND ASSIGNS

This Contract extends to and is binding upon Amadeus, its successors and assignees, including any individual, company, partnership or other entity with or into which Amadeus merges, consolidates or is liquidated, or any person, corporation, partnership or other entity to which Amadeus sells its assets.

CONTRACT ADMINISTRATOR

The Contract Administrator for PMGAA is Doug Wirthgen or designee. The Contract Administrator will oversee the execution of this Contract, assist Amadeus in accessing the organization, audit billings, approve payments, establish delivery schedules, and assure

© 2021 Amadeus IT Group and its affiliates and subsidiaries

Certificates of Insurance are current, conform to the Contract requirements, and are in PMGAA's possession. Amadeus will direct reports and special requests through the Contract Administrator.

NOTICES

All notices or demands required to be given in accordance with the terms of this Contract must be given to the other party in writing, delivered by hand or e-mail or registered or certified mail, at the addresses stated below, or to any other address the Parties may substitute by written notice given in the manner prescribed in this paragraph.

In the case of Amadeus:

Amadeus Airport IT Americas, Inc.
Attn: Chris Keller, Vice President
5950 Hazeltine National Drive
Suite 210
Orlando, FL 32822

In the case of PMGAA:

Phoenix Mesa Gateway Airport Authority
Attn: Information Technology Director
5835 S. Sossaman Rd.
Mesa, AZ 85212

Notices will be deemed received on date delivered, if delivered by hand, on the date recorded by the hardware, if sent by e-mail, and on the delivery date indicated on receipt, if delivered by certified or registered mail.

TERMINATION

Termination for Cause: PMGAA may cancel this Contract with seven (7) days' notice for cause in the event of Amadeus' default or if Amadeus fails to comply with any of the material terms and conditions of this Contract. Unsatisfactory performance as determined by the Contract Administrator or failure to provide PMGAA, upon request, with adequate assurances of future satisfactory performance are examples of grounds whereby PMGAA may cancel this Contract for cause. In the event of cancellation for cause, PMGAA will not be liable to Amadeus for any amount, and Amadeus will be liable to PMGAA for any and all damages PMGAA sustains by reason of the default or failure which gave rise to the cancellation. In the event Amadeus is in violation of any federal, state, county, or local law, regulation or ordinance, PMGAA may terminate this Contract immediately upon providing such notice to Amadeus.

Termination for Convenience: PMGAA may terminate this Agreement at any time, with or without cause, provided PMGAA gives fourteen (14) calendar days' advance written notice to

© 2021 Amadeus IT Group and its affiliates and subsidiaries

Amadeus. If this Contract is terminated, then PMGAA is liable only for services rendered and material received, certified, and approved by PMGAA under the Contract before the termination effective date.

ADVERTISING

No advertising or publicity concerning PMGAA using Amadeus' services shall be undertaken without prior written approval of such advertising or publicity by PMGAA.

FUNDS APPROPRIATION

If PMGAA does not appropriate funds to continue and pay for charges under this Contract, PMGAA may terminate this Contract at the end of its then-current fiscal period. PMGAA agrees to give written notice of such termination to Amadeus at least 15 (fifteen) days prior to the end of its current fiscal period and will pay to Amadeus all approved charges incurred through the end of such period.

ARIZONA LAW AND JURISDICTION

This Contract shall be governed and interpreted according to the laws of the State of Arizona without regard to conflicts or choice of law provisions. Any action to enforce any provision of this Contract or to obtain any remedy under this Contract will be brought into the appropriate federal or superior court located in Maricopa County, Arizona, and each Party expressly and irrevocably consents to such jurisdiction and venue.

COMPLIANCE WITH FEDERAL AND STATE LAWS

Amadeus understands and acknowledges the Americans with Disabilities Act, the Immigration Reform and Control Act of 1986, and the Drug Free Workplace Act of 1989 apply to its services under this Contract.

IMMIGRATION LAW COMPLIANCE

Under the provisions of A.R.S. §41-4401, Amadeus warrants to PMGAA that Amadeus and all its subcontractors will comply with all federal immigration laws and regulations that relate to their employees and that Amadeus and all its subcontractors now comply with the E-Verify Program under A.R.S. §23-214(A). A breach of this warranty by Amadeus or any of its subcontractors will be considered a material breach of this Contract.

INDEMNIFICATION

To the fullest extent permitted by law, Amadeus, its successors, assignees and guarantors, must defend, indemnify and hold harmless PMGAA, its agents, representatives, officers, directors, officials and employees from and against all allegations, demands, proceedings, suits, actions, claims, damages, losses, expenses, including but not limited to, attorney fees, court costs, and the cost of appellate proceedings, and all claim adjusting and handling expense, related to, arising from or out of, or resulting from any act or omission, negligence, recklessness, or intentional wrongful conduct by Amadeus in the performance of this Contract, including but not limited to, any Subcontractors or anyone directly or indirectly

© 2021 Amadeus IT Group and its affiliates and subsidiaries

employed by any of them or anyone for whose acts any of them may be liable, and any injury or damages claimed by any of Amadeus' and Subcontractor's employees.

The aforementioned, Amadeus' total aggregate liability to the PMGAA for any losses suffered in relation to this Agreement (including the indemnities in this Section 12) shall not exceed the total amounts payable Amadeus under the Agreement, and in no case shall either party be liable to the other party for any lost profits, indirect losses or consequential damages .

SEVERABILITY

If any term or provision of this Contract is found to be illegal or unenforceable, then despite this illegality or unenforceability, this Contract will remain in full force and effect and that term or provision will be considered deleted.

© 2021 Amadeus IT Group and its affiliates and subsidiaries

9. Agreement

Both parties accept and agree to the terms of this agreement between Amadeus and Phoenix Mesa Gateway Airport Authority by signing this document below.

AMADEUS AIRPORT IT AMERICAS, INC.	PHOENIX MESA GATEWAY AIRPORT AUTHORITY, a joint powers airport authority authorized by the State of Arizona
By: _____	By: _____
Name: _____	Name: J. Brian O'Neill, A.A.E.
Title: _____	Title: Executive Director/CEO
Date: _____	Date: _____

© 2021 Amadeus IT Group and its affiliates and subsidiaries

Exhibit A – Software License and Warranty

CONFIDENTIAL & RESTRICTED

Software License and Warranty

amadeus

1. LICENSE: In consideration of the payment of the making of the Agreement between the parties, the receipt and sufficiency of which Licensor acknowledges, Licensor grants Licensee an indivisible, non-exclusive, non-transferable, and revocable, license to use (a) Licensor's computer software described in Schedule "A" in machine-readable form and (b) the related online user manuals and documentation, which together comprise the "Licensed Software," for the term set forth in paragraph 8 below. Licensee is responsible for converting its own data files into data usable by the Licensed Software. Excluded from the Licensed Software is any separately identified third-party software that is not being licensed to Licensee hereunder, and must be independently obtained by Licensee. If applicable, Licensee will be required to acquire a valid third party software license from _____ in order to operate the Licensed Software. This Addendum grant to Licensee is a license to use the Licensed Software only, and is not a sale of the Licensed Software or of any copy or portion thereof. If a user limitation is stated in the Agreement, Licensee may not exceed use by more than said user limitation.

2. SCOPE OF RIGHTS: Licensee may:

(a) Install the Licensed Software on computer systems owned, leased, or otherwise controlled by Licensee at its own facilities.

(b) Use the Licensed Software on Licensee's computer systems for the sole purpose of serving the internal needs of Licensee's business, only at the locations specified in Schedule "A."

(c) Make one copy of the Licensed Software (in machine-readable form only) as necessary only for non-productive back-up or archival purposes in accordance with Licensee's standard procedures. For any additional copies made or used by Licensee, Licensee agrees to pay a license fee in respect of such additional copies, as mutually agreed by the parties. Any surplus copies of the Licensed Software and the documentation not needed for Licensee's internal use, back-up, or archival purposes shall be promptly returned to Licensor. No credit shall be given to Licensee for such returned copies of the Licensed Software.

3. PROHIBITED ACTS AND USES: Licensee may not use, copy, distribute, publish, recast, translate, modify, change, revise, or alter the Licensed Software, or any copy, adaptation, transcription, derivations, or merged portion thereof, except as expressly authorized by licensor. Licensee may not sell, donate, share, transfer, assign, pledge, encumber, lease, rent, license, or sublicense the Licensed Software, or any portions, derivations, or adaptations hereof, except to a successor-in-interest of Licensee's entire business who assumes, in writing, the obligations of this Addendum. No service bureau work or time-sharing arrangements are permitted unless expressly authorized by the Licensor. Placement on and/or use of the Licensed Software on processors accessible through communication networks using terminals and devices not on Licensee's premises is prohibited.

4. EQUIPMENT: The Licensed Software is designed for use on computer hardware specified on Schedule "B." Licensor reserves the right to approve in advance the use by Licensee of any hardware, equipment, communication boards, and peripherals used in conjunction with the Licensed Software. Such approval shall not be unreasonably withheld. Licensee is solely responsible for site preparation and environmental control and stability at the location where the Licensed Software is installed. Licensor has no responsibilities concerning Licensee's facilities or equipment.

5. LICENSEE'S RESPONSIBILITIES IN USE OF THE LICENSED SOFTWARE: Licensee shall be responsible for the installation, supervision, management, operation, and control of the Licensed Software, including, but not limited to:

(a) Assuring proper machine configuration, program installation, operating system release level, audit controls and operating methods;

(b) Establishing adequate backup and disaster recovery plans;

(c) Implementing sufficient procedures and checkpoints to satisfy Licensee's requirements for security and accuracy of data input and output, as well as restart and recovery, in the event of a malfunction or loss of data;

Copyright © 1993-2018 Amadeus Airport IT Americas, Inc. All rights reserved
Software License -US-LIC1.DOC
March 9, 2018

© 2021 Amadeus IT Group and its affiliates and subsidiaries

CONFIDENTIAL & RESTRICTED

amadeus

(d) Designating a Project Manager to have overall responsibility and authority concerning the installation, operation, and management of the Licensed Software; and

(e) Maintaining at least one adequate and restorable backup of the Licensed Software and all third party software.

6. PROPRIETARY PROTECTION OF LICENSED SOFTWARE:

(a) Licensee acknowledges that the Licensed Software constitutes trade secrets and proprietary data of Licensor and that the Licensed Software contains proprietary products licensed to Licensee, which shall remain the property of Licensor before, during, and after termination of this Addendum. Licensor has sole and exclusive ownership and copyright of all right, title, and interest in the Licensed Software and in any applications, modifications, improvements, or enhancements to the Licensed Software, including ownership of all trade secrets and copyrights pertaining to the Licensed Software and all works derived from the License Software, regardless of the media in which the Licensed Software is contained, recorded, or fixed.

(b) Licensee may not, at any time, disclose or disseminate the trade secrets embodied in the Licensed Software to any person, firm, organization, or employee who does not need to obtain access thereto consistent with Licensee's rights under this Addendum. Under no circumstances may Licensee copy, "unlock," de-compile, dissemble, reverse assemble, or reverse engineer the binary or object code of the Licensed Software, as these terms are generally used in the trade. Under no circumstances may Licensee disclose or disseminate any trade secrets contained in the Licensed Software to any competitor of Licensor. Licensee will devote its best efforts to ensure that all Licensees' personnel and all other persons afforded access to the Licensed Software protect Licensor's copyrights and trade secrets against improper use, dissemination, or disclosure.

(c) Licensee must reproduce and include in all copies of the Licensed Software prepared by Licensee and approved by Licensor the copyright notice(s) and proprietary legend(s) of Licensor and Licensor's licensors/vendors (if any) as they appear in the Licensed Software supplied to Licensee.

(d) Licensee acknowledges that, in the event of Licensee's breach of any of the foregoing provisions, Licensor may not have any adequate remedy in money damages. Licensor shall therefore be entitled to obtain an injunction against such breach from any court of competent jurisdiction immediately upon request without requirement of bond or other security. Licensor's right to obtain injunctive relief shall not limit its right to seek additional remedies.

(e) Licensee's obligations hereunder shall remain in effect for as long as Licensee continues to possess or use the Licensed Software or any trade secrets or works derived therefrom.

7. WARRANTIES OF LICENSOR; LIMITATIONS OF LIABILITY: Licensor warrants to Licensee that at the time of delivery of the Licensed Software to Licensee:

(a) Licensor has the right to furnish the Licensed Software free of all liens, claims, and encumbrances imposed by or through Licensor;

(b) The Licensed Software will perform, on an appropriately configured computer system, in the manner described in Licensor's published documentation. No warranty is provided by Licensor for any thirty-party software;

(c) That Licensor further warrants that the Licensed Software is the latest developed version and edition of said software, and that any subsequent version issued within two years of the date of this contract will be furnished to Licensee at no cost, provided only that the License granted hereunder is in force, under maintenance and support by Licensor, and all fees have been paid by Licensee.

(d) Licensor is not responsible for any obsolescence of the Licensed Software (i) that may result from changes in Licensee's requirements, (ii) from changes in federal, state, or local laws or regulations, or (iii) any operating systems, interface programs, or any third-party software used in conjunction with the Licensed Software.

Copyright © 1993-2018 Amadeus Airport IT Americas, Inc. All rights reserved

© 2021 Amadeus IT Group and its affiliates and subsidiaries

CONFIDENTIAL & RESTRICTED

amadeus

Software License and Warranty

(e) Licensor's sole responsibility to Licensee or to any third party for any claims, notwithstanding the theory of such claims (e.g., contract, breach of warranty, negligence or otherwise) arising out of errors or omissions in the Licensed Software provided hereunder and caused by Licensor (provided that Licensee shall have promptly notified Licensor of any such errors or omissions), shall be to correct the errors or omissions or replace the Licensed Software with another copy thereof. Licensor does not warrant that the Licensed Software will operate without interruption or error free or that its functions will meet Licensee's particular requirements, now or in the future. Licensee is solely responsible for ensuring the Licensed Software will accommodate its current and anticipated business needs.

(f) Licensor shall not be responsible for, and all warranties shall be void for, any malfunction of the Licensed Software due to Licensee's unauthorized copying or modification of the Licensed Software, failure to properly use the Licensed Software for its intended purpose, or failure to install, use, or maintain the Licensed Software on Licensor-approved equipment.

(g) Licensor shall not be liable to Licensee for errors resulting from defects in, or malfunctions of, the mechanical or electronic equipment used by Licensee in conjunction with the Licensed Software, for Licensee or its agents' failure to follow licensor's instructions, use of non-licensed products with the Licensed Software, or for factors beyond Licensor's ability to control.

(h) It is the intent of the parties that Licensee's sole remedy for breach of warranty or breach of contract be limited to the repair and replacement of defective Licensed Software, and if that cannot be accomplished, then in no event damages exceeding the amounts paid to Licensor for the license fee hereunder or as provided under the Agreement. In the event Licensee recovers insurance proceeds pursuant to licensee's insurance, such proceeds shall constitute a setoff against actual damages claimed by Licensee. It is understood that all costs and expenses of such insurance shall be paid by Licensee.

(i) UNLESS OTHERWISE EXPRESSLY STATED HEREIN, IN NO EVENT WILL LICENSOR BE RESPONSIBLE FOR SPECIAL, INDIRECT, RELIANCE, INCIDENTAL, OR CONSEQUENTIAL DAMAGES ARISING OUT OF ANY ACT OR OMISSION BY LICENSOR IN CONNECTION WITH THIS ADDENDUM, EVEN IF LICENSOR HAS BEEN ADVISED OF THE POSSIBILITY OF SUCH DAMAGES, WHETHER SUCH DAMAGES ARISE IN AN ACTION AT LAW OR IN EQUITY, FOR BREACH OF CONTRACT, BREACH OF WARRANTY, PRODUCT LIABILITY, BREACH OF UCC PROVISIONS, NEGLIGENCE, GROSS NEGLIGENCE, OR INTENTIONAL TORT. FURTHERMORE, LICENSOR SHALL NOT BE LIABLE FOR LICENSEE'S LOST PROFITS, LOSS OF BUSINESS OPPORTUNITIES, LOSS OF SAVINGS, LOSS OF REVENUE, OR FOR EXEMPLARY DAMAGES. THE PROVISIONS HEREOF ARE IN LIEU OF AND EXCLUDE ALL OTHER WARRANTIES, EXPRESS OR IMPLIED, WHETHER OF MERCHANTABILITY, FITNESS, OR OTHERWISE. IN THE EVENT THE ABOVE EXCLUSION OF IMPLIED WARRANTIES IS FOUND NOT TO APPLY TO LICENSEE, THEN IN ANY EVENT AND UNDER ANY THEORY OR FORM OF ACTION, LICENSOR'S LIABILITY WILL NOT EXCEED THE AMOUNT OF THE LICENSE FEE PAID BY LICENSEE TO LICENSOR UNDER THIS ADDENDUM OR AS PROVIDED UNDER THE AGREEMENT.

(j) Licensor has set the license fee and maintenance fee based on the allocation of risks set forth in this paragraph 7 and the parties have bargained for and agree to the provisions of this paragraph 7.

8. TERM AND TERMINATION: This Addendum shall become effective on the Effective Date and, unless terminated as set forth below, shall remain in effect until terminated in writing by either party. This License shall automatically terminate if Licensee ceases to be a customer of Licensor or if the Agreement between the Parties terminates.

(a) In the event of Licensee's violation of any covenants or promises in this Addendum, including those relating to copying or distributing the Licensed Software, confidentiality, allowing unauthorized (by Licensor) persons or entities to use or access the

Copyright © 1993-2018 Amadeus Airport IT Americas, Inc. All rights reserved
Software License -US-LIC1.DOC
March 8, 2018

© 2021 Amadeus IT Group and its affiliates and subsidiaries

CONFIDENTIAL & RESTRICTED

amadeus

software, competitive use, or any other violation of restrictions protecting Licensor or the Licensed Software, Licensor shall have the right to terminate this Addendum and the license granted herein immediately, to seek injunctive relief, and to obtain all other applicable remedies afforded by law or equity against Licensee.

(b) Licensor shall have the right to terminate this Addendum if (i) any sums due to Licensor remain unpaid more than thirty (30) days after the date of invoice, or (ii) shall be considered a material default under this Addendum, and Licensor shall have the right to terminate this Addendum, if the default remains uncured 15 days after Notice of Default is sent to Licensee specifying the default and describing the actions necessary to remedy the default.

(c) Upon termination of this Addendum, all rights granted to Licensee hereunder shall expire, terminate, and revert to Licensor. Promptly upon termination of Addendum for any reason or upon discontinuance or abandonment of Licensee's possession or use of the Licensed Software, Licensee must return all copies of the Licensed Software, including archived copies, and all documentation in Licensee's possession (whether modified or unmodified), and all other materials pertaining to the Licensed Software (including all copies thereof).

9. MAINTENANCE OF LICENSED SOFTWARE: If mutually agreed, Licensor agrees to provide maintenance and support services for the Licensed Software pursuant to the terms and conditions of a separate Support Agreement.

10. EXPORT RESTRICTIONS: This Addendum is made subject to any restrictions concerning the export of the Licensed Software or any part thereof from the United States of America. Licensee shall not export, directly or indirectly, the Licensed Software, nor any other technical data received from Licensor, in violation of such laws. Licensee shall not export, transmit, or broadcast, directly or indirectly, the Licensed Software or technical information therefrom acquired from Licensor under this Addendum to any country for which the United States government or any agency thereof at the time of export requires an export license or other governmental approval, without first obtaining the written consent to do so from Licensor and the United States Department of Commerce and other authorized agencies of the United States government when required by an applicable statute or regulation. Licensee represents and warrants that the Licensed Software will not be provided, either directly or indirectly, to any of the following countries or to any national or resident thereof, unless Licensee has obtained prior written authorization of Licensor and the United States Department of Commerce: Cuba, Libya, Iran, Iraq, Sudan, Syria, North Korea, and any country embargoed by executive order. Upon notice to Licensee, Licensor shall have the right to modify this list to conform to changes in the United States Export Control Regulations.

11. CONFIDENTIALITY: Licensee shall use its best efforts to maintain the secrecy of any confidential information of Licensor disclosed to Licensee that has been marked "proprietary," "secret," or "confidential." During and after the term of this Addendum, Licensee shall refrain from using, disclosing, or otherwise exploiting any such confidential information relating to the Licensed Software for any purpose not specifically authorized in writing by Licensor. Licensee shall return or destroy all confidential information of Licensor within ninety (90) days after the termination of this Addendum, including any notes, summaries or extracts from such confidential information, and Licensee shall certify to Licensor in writing that Licensee has fully complied with this Section 11.

12. INDEMNIFICATION: Licensee shall defend, indemnify, and hold harmless Licensor, its officers, directors, shareholders, employees, agents, and contractors, from and against any loss or liability arising from any claims, suits, demands, or actions (including reasonable attorneys' fees and suit costs) arising out of or relating to the negligent or intentional acts of Licensee, its agents, employees, and independent contractors arising out of or in connection with the use of the Licensed Software by Licensee.

13. TRADEMARK: Licensee hereby acknowledges Licensor's ownership of all right, title and interest in the trademark and name of Licensed Product and all other trademarks, service marks and copyrights of Licensor associated with the Products. Licensee further acknowledges that it shall acquire no

Copyright © 1993-2018 Amadeus Airport IT Americas, Inc. All rights reserved

© 2021 Amadeus IT Group and its affiliates and subsidiaries

CONFIDENTIAL & RESTRICTED

ownership, license, or other interest therein by virtue of this Addendum or the performance by Licensee of its duties and obligations hereunder.

14 GENERAL:

(a) Licensee is solely responsible for reporting and paying any taxes (including sales or use taxes, and property and intangible taxes) resulting from Licensee's acceptance of this license and Licensee's possession and use of the Licensed Software or any equipment or operating system software provided or furnished under this Addendum. Licensor reserves the right to have Licensee pay any such taxes to Licensor as they fall due for remittance to the appropriate authority. Licensee agrees to hold Licensor harmless from all liability arising from Licensee's failure to report or pay such taxes.

(b) The parties hereby agree and consent that (i) exclusive venue for any legal action authorized or brought hereunder, or brought by either party against the other whether based in contract, tort, breach of warranty or promise, or other theory under law or equity, shall be in Orange County, Florida, and that (ii) personal jurisdiction of the parties shall be vested exclusively in the Circuit Court in Orange County, Florida.

(c) This Addendum shall be governed by and construed in accordance with the laws of the State of Florida, without recognition of conflict of law decisions.

(d) No modification of this Addendum shall be binding unless it is in writing and signed by an authorized representative of the party against whom enforcement of the modification is sought.

(e) Any notice required or permitted under this Addendum shall be in writing and delivered in person or sent by certified mail, return receipt requested, with proper postage affixed.

(f) In the event that any of the terms of this Addendum are or become, or are declared to be, invalid or void, they shall be deemed severed from this Addendum and all the remaining terms of this Addendum shall remain in full force and effect.

(g) This Addendum and the Agreement are the complete and exclusive statements of Licensor's obligations and responsibilities to Licensee and supersedes any other proposal, representation, or other communication by or behalf of Licensor relating to the subject matter hereof. Licensee's use of the Licensed Software shall not commence until Licensee has executed the Agreement, this Addendum, and an authorized representative of Licensor has received, approved, and executed a copy of this Addendum as executed by Licensee. In the event of a conflict in the terms of this Addendum and the Agreement, the Agreement shall control and govern.

(h) In the event either party brings suit to enforce the provisions of this Addendum, the Court shall have the right to award reasonable attorneys' fees to the prevailing party.

Copyright © 1993-2018 Amadeus Airport IT Americas, Inc. All rights reserved
Software License -US LIC1.DOC
March 8, 2018

© 2021 Amadeus IT Group and its affiliates and subsidiaries

Exhibit B – 2021 Labor Rates

REF#	SYSTEM OR OPTION	QTY	UNIT	COST
Amadeus Labor Rates				
1	Amadeus Field Engineer	1	HR	$75.00
2	Amadeus Network Engineer	1	HR	$175.00
3	Amadeus Network Administrator	1	HR	$175.00
4	Amadeus System Administrator	1	HR	$175.00
5	Amadeus/3rd Party PCI/Security Consultant	1	HR	$175.00
6	Amadeus Systems Engineer	1	HR	$140.00
7	Amadeus Sr. Systems Engineer	1	HR	$140.00
8	Amadeus Systems Engineering Manager	1	HR	$175.00
9	Amadeus Solution Design Engineer	1	HR	$140.00
10	Amadeus Sr. Solution Design Engineer	1	HR	$140.00
11	Amadeus Solution Design Manager	1	HR	$140.00
12	Amadeus Software Engineer	1	HR	$140.00
13	Amadeus Sr. Software Engineer	1	HR	$175.00
14	Amadeus Software Engineer Manager	1	HR	$175.00
15	Amadeus Program/Project/Consulting Manager	1	HR	$175.00

© 2021 Amadeus IT Group and its affiliates and subsidiaries

Phoenix-Mesa Gateway Airport Authority
5835 S Sossaman Road
Mesa, Arizona 85212-6014
www.gatewayairport.com

Board Action Item

Re: Resolution 21-15

To:	**Board of Directors**
From:	**Shea Joachim, CEcD, Business Development Director**
Through:	**J. Brian O'Neill, A.A.E., Executive Director/CEO**
Subject:	**Ellsworth Road Safety Area Easement Extinguishment**
Date:	**May 18, 2021**

Proposed Motion

The Board of Directors of the Authority hereby authorizes the extinguishment of the 16.69-acre perpetual easement subject to the issuance of an Instrument of Release from the FAA.

Narrative

The United States of America ("USA") acquired a 16.69-acre perpetual easement ("Easement") from General Motors Corporation in April 1978 as a preventive measure to establish a safety area around bunkers used for munitions storage by the Air Force. The fee simple ownership of the land impacted by the Easement was sold by General Motors Corporation to Pacific Proving, LLC in June 2004. The Easement was assigned by the USA to the Phoenix Mesa Gateway Airport Authority ("PMGAA") in August 2015.

The Easement imposes restrictions on the underlying property that, in general, limit "human habitation" and "gatherings of more than twenty-five (25) persons." The land impacted by the Easement is not contiguous to the Airport and is located on the east side of Ellsworth Road. Pacific Proving, LLC has asked the Airport to extinguish the Easement and thereby remove the restrictions placed on their property. The Airport is required to coordinate with the Federal Aviation Administration ("FAA") on property release efforts such as extinguishing the Easement. The FAA conducts a review of a variety of issues including how the property was acquired, the Airport's justification for the release, current condition of the property to be released, and property valuation. The Airport has coordinated with the FAA on most of the information required except for a PMGAA Board approved resolution authorizing the extinguishment of the Easement. If the PMGAA Board approves the proposed resolution, Airport staff will submit the resolution to the FAA and the FAA will initiate a 30-day Federal Register notification. The FAA will issue an Instrument of Release upon satisfaction of their review and notification requirements.

Fiscal Impact

PMGAA will receive $500,000 from Pacific Proving, LLC in exchange for extinguishing the easement. The valuation is supported by a recent (April 2021) appraisal of the Easement performed by a licensed appraiser.

Attachment(s)

1) Easement (Maricopa County Recorder Document #1978-0189135)
2) Diagram of Easement
3) Appraisal Report

RESOLUTION NO. 21-15

WHEREAS, the Phoenix-Mesa Gateway Airport Authority ("Authority"), a joint powers airport authority formed pursuant to Arizona Revised Statute §28-8521 *et seq.* owns and operates the Phoenix-Mesa Gateway Airport ("Airport"); and

WHEREAS the United States of America acquired rights to a 16.69-acre perpetual easement ("Easement"), as recorded with the Maricopa County Recorder's Office (Document 1978-0189135), from General Motors Corporation on April 19, 1978 for the establishment, maintenance, operation and use of a safety area related to munitions stored by the United States Air Force. The Easement was assigned to the Phoenix-Mesa Gateway Airport Authority on August 13, 2015; and

WHEREAS the General Motors Corporation sold the fee simple right to the property encumbered by the Easement to Pacific Proving, LLC on June 30, 2004; and

WHEREAS Pacific Proving, LLC has requested the Authority extinguish the Easement in exchange for fair market consideration in the amount of $500,000.00; and

WHEREAS the Authority in coordination with the Federal Aviation Administration ("FAA") has determined that the Easement is not required to safely operate the Airport,

NOW, THEREFORE, BE IT RESOLVED by the Board of Directors of the Authority as follows:

> **The Board of Directors of the Authority hereby authorizes the extinguishment of the 16.69-acre perpetual easement in exchange for fair market consideration of $500,000.00, subject to the issuance of an Instrument of Release from the FAA. This resolution also authorizes the Chair or Executive Director/CEO, to execute such agreement, and following receipt of the Instrument of Release, to execute an extinguishment document, with such insertions, deletions, and changes as may be approved by the Chair or Executive Director/CEO, necessary to carry out the purposes and intent of this Resolution.**

Passed and adopted by the Authority this 18th day of May, 2021.

_____

Gail Barney, Chair

ATTEST:

APPROVED AS TO FORM:

Phoenix-Mesa Gateway Airport

Misty Johnson, Clerk of the Board	Jill Casson Owen, Attorney

LAWRENCE E. BLOOM, MAI
9842 East San Salvador Drive
Scottsdale, Arizona 85258

(480) 614-8688
leb@qwestoffice.net

APPRAISAL REPORT

An Easement on 16.69± Acres of Vacant Land
East Side of South Ellsworth Road,
Just South of the Planned State Highway 24 Extension
Unincorporated Area of Maricopa County, Arizona

PREPARED FOR:

Paul E. Gilbert, Esq.
Beus Gilbert McGroder, PLLC
701 North 44th Street
Phoenix, Arizona 85008

DATE OF VALUATION:

April 16, 2021

DATE OF APPRAISAL REPORT:

May 3, 2021

PREPARED BY:

Lawrence E. Bloom, MAI

LAWRENCE E. BLOOM, MAI
9842 East San Salvador Drive
Scottsdale, Arizona 85258

(480) 614-8688
leb@qwestoffice.net

May 3, 2021

Paul E. Gilbert, Esq.
Beus Gilbert McGroder, PLLC
701 North 44th Street
Phoenix, Arizona 85008

RE: An Appraisal Report of an Easement on 16.69± Acres of Vacant Land located along the East Side of South Ellsworth Road, Just South of the Planned State Highway 24 Extension Unincorporated Area of Maricopa County, Arizona

Dear Mr. Gilbert:

At your request and authorization, I have completed an Appraisal Report in summary format of the above referenced Easement. The purpose of this report is to estimate the value of the Easement, as of April 16, 2021, for internal management purposes for the holder of the Easement, and the property owner of the land encumbered by the subject Easement.

The following report contains the underlying assumptions, contingencies, factual information and reasoning which led to the conclusion. I certify that the report has been prepared in accordance with and is subject to the Uniform Standards of Professional Appraisal Practice (USPAP) as established by the Appraisal Institute and relevant sections of the Financial Institutions Reform, Recovery and Enforcement Act (FIRREA) of 1989.

This is an Appraisal Report for internal management purposes, which is intended to comply with the reporting requirements set forth under the Uniform Standards of Professional Appraisal Practice. This appraisal report presents the discussions of the data, reasoning, and analysis in a summary format that were used in the appraisal process to develop the appraiser's opinion of value. This report limits its use to the client, because the opinions and conclusions in this report may not be properly understood without additional information contained in the Appraiser's work file.

Disclosure of the contents of this appraisal is governed by the By-Laws and Regulations of the Appraisal Institute; the information in this report is specific to the needs of the client and for the intended use in this report. The Appraiser is not responsible for unauthorized use of this report.

The subject Easement is dated April 19, 1978, and encumbers 16.69± acres of vacant and unimproved land that is located along the east side of South Ellsworth Road in the unincorporated area of Maricopa County, just south of the planned extension of State Highway 24. The encumbered land is owned by Pacific Proving, LLC, and is a part of Maricopa County Assessor Parcel No. 313-25-859C. The total parcel of land consists of 885.17± acres, and is entirely owned by Pacific Proving, LLC.

The subject Easement is dated April 19, 1978. According to the Easement, for the sum of $10,500 General Motors Corporation granted to the United States of America and its assigns, a perpetual and assignable easement over and across 16.69± acres of its land for *"the establishment, maintenance, operation, and use for a safety area, consisting of the right to prohibit human habitation; the right to remove buildings presently or hereafter being used for human habitation; the right to prohibit gatherings of more than twenty-five (25) persons; the right to post signs indicating the nature and extent of the control by the United States; and the right of ingress and egress over and across said land for the purpose of exercising the rights herein granted.*

SUBJECT, however, to existing easements for public roads and highways, public utilities, railroads, and pipelines.

RESERVING, however, to the Grantor, its successors and assigns, all such rights and privileges as may be used without interfering with or abridging the rights and easement hereby granted, including, but not limited to, the right to develop and use said land for test roads for passenger car and truck tests."

On June 30, 2004 General Motors Corporation sold 1,805± acres of land to Pacific Proving, LLC, which included the 16.69± acres of land that the Easement encumbers. Accordingly, ownership of the land was transferred to Pacific Proving, LLC, subject to this Easement.

On August 13, 2015, the original holder of this Easement, the United States of America, assigned this Easement to the Phoenix Mesa Gateway Airport Authority.

For valuation purposes of the subject Easement, its value is based upon the loss in value to the fee simple owner of the land due to the rights that are provided to the holder of this Easement.

The subject land is zoned "IND-2" by Maricopa County, which indicates a light industrial zoning. Permitted uses within this zoning district include light manufacturing, warehousing, offices, processing, assembly, research & development, laboratories, truck terminals, wholesale distribution centers, outdoor equipment storage, vehicle parking, and other related light industrial uses.

Based upon my analysis, the value of the subject Easement, as of April 16, 2021, subject to the assumptions, limiting conditions, and certification outlined in this report, is estimated to be:

$500,000
FIVE HUNDRED THOUSAND DOLLARS

Respectfully submitted,

Lawrence E. Bloom, MAI
Arizona Certified General Real Estate Appraiser, #31202, exp. 1/31/22

ALTA SURVEY OF SUBJECT EASEMENT

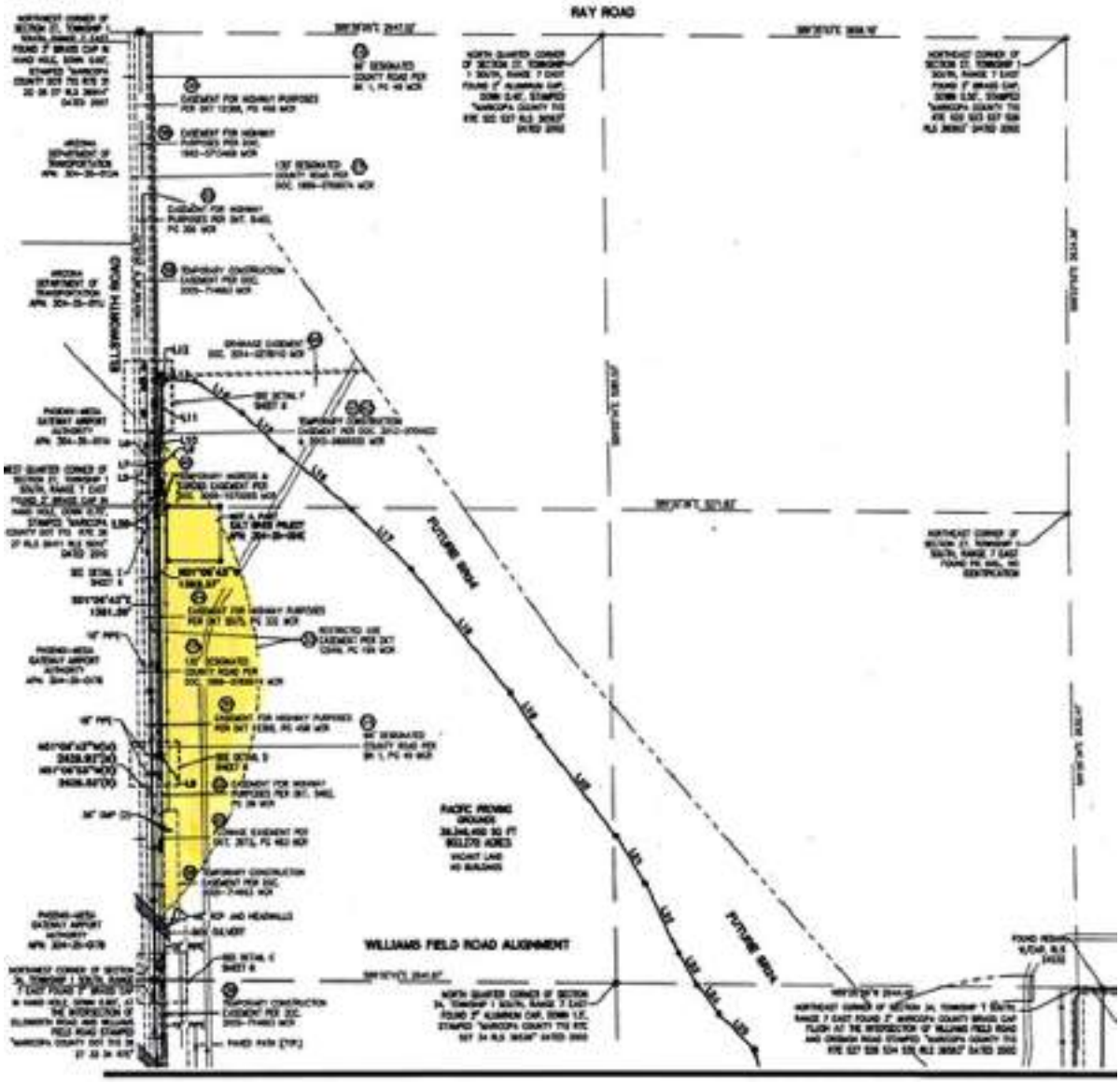

The Land Encumbered by the Subject Easement is Highlighted in Yellow

AERIAL PHOTO

The Land Encumbered by the Subject Easement is Outlined in Yellow and the Total Assessor Parcel that is Owned by Pacific Proving, LLC is Outlined in Blue.

SUBJECT PHOTOS

View of Subject Land

View of Subject Land

SUBJECT PHOTOS

North View along South Ellsworth Road taken at Subject Land

Northeast View of Subject Land taken from South Ellsworth Road

SUBJECT PHOTOS

North View along South Ellsworth Road near Subject Land

South View along South Ellsworth Road near Subject Land

TABLE OF CONTENTS

Page

SUMMARY OF SALIENT FACTS AND CONCLUSIONS……...….…1

INTRODUCTION
- Scope of the Appraisal……...2
- Identification of Subject Property……..5
- Purpose of the Appraisal…….……..…... 6
- Definition of Market Value……6
- Definition of Easement……...……7
- Property Rights Appraised……...… 7
- Date of Appraisal……...…….…….. 7
- Ownership and Property History……..….……..… 8

DESCRIPTIVE DATA
- Metropolitan Area Data…….……..... 10
- Neighborhood Description…….……..…15
- Site & Easement Description……...…… 16
- Real Estate Taxes and Assessments…….……... 17

HIGHEST AND BEST USE…….……..... 18

VALUATION
- Valuation Process…….20
- Sales Comparison Approach……...….22
- Reconciliation and Conclusion of Value……...……36

UNDERLYING ASSUMPTIONS AND LIMITING CONDITIONS……37
CERTIFICATION……..……44

ADDENDA
- Subject Easement & Its Legal Description
- Statement of Qualifications
- Appraiser Certification

SUMMARY OF FACTS AND CONCLUSIONS

PURPOSE OF APPRAISAL:	The purpose of this report is to estimate the value of the subject Easement, as of April 16, 2021, for internal management purposes for the holder of the Easement, and the property owner of the land encumbered by the Easement. For valuation purposes of the subject Easement, its value is based upon the loss in value to the fee simple owner of its land due to the rights that are provided to the holder of this Easement.
DESCRIPTION OF EASEMENT:	The subject Easement is dated April 19, 1978, and encumbers 16.69± acres of vacant and unimproved land. The encumbered land is owned by Pacific Proving, LLC, and is a part of Maricopa County Assessor Parcel No. 313-25-859C. The total parcel of land consists of 885.17± acres, and is entirely owned by Pacific Proving, LLC. On June 30, 2004 General Motors Corporation sold 1,805± acres of land to Pacific Proving, LLC, which included the 16.69± acres of land that the Easement encumbers. Accordingly, ownership of the land was transferred to Pacific Proving, LLC, subject to this Easement. On August 13, 2015, the original holder of this Easement, the United States of America, assigned this Easement to the Phoenix Mesa Gateway Airport Authority.
LOCATION:	The subject land is situated within the unincorporated area of Maricopa County, just east of the Phoenix-Mesa Gateway Airport, and within the city of Mesa Planning District for future annexation purposes. It is located along the east side of South Ellsworth Road in the unincorporated area of Maricopa County, just south of the planned extension of State Highway 24.
ZONING:	The subject land is zoned "IND-2" by Maricopa County, which indicates a light industrial zoning district.

Estimated Value of Subject Easement: $500,000

SCOPE OF THE APPRAISAL[1]

Definition of the Scope of Work:

Scope of Work:

The Scope of Work is defined as "the type and extent of research and analyses in an assignment." [2]

> *"For each appraisal, appraisal review, and appraisal consulting assignment, an appraiser must:*
>
> (1) identify the problem to be solved;
> (2) determine and perform the scope of work necessary to develop credible assignment results; and;
> (3) disclose the scope of work in an assignment."[3]

Scope of the Appraisal

> *A clear and accurate description of the scope of the appraisal is desirable to protect those persons whose reliance on the appraisal may be affected. The term scope of work refers to the amount and type of information researched and the analysis applied in the assignment. The standards clearly impose a responsibility on the appraiser to determine the appropriate scope of work to develop the value opinion and prepare the report. By describing the scope of work, the appraiser signifies acceptance of this responsibility.*[4]

The appraisal process is in large part an investigatory procedure. The appraiser has attempted to collect all of the relevant data on the subject from reliable sources. The appraiser requests the client to review the appraisal document and if any errors are found in the data to immediately contact the appraiser and relay this information to him. If factual errors are discovered, the appraiser reserves the right to re-address his valuation. The appraiser agrees to address any error, which may be material in writing in a timely manner.

As a part of this appraisal assignment, the appraiser made a number of independent investigations and analyses. Initially, I relied on our internal data, which is retained in my files and regularly updated to reflect current market phenomena and attitudes. A search for data in the neighborhood of the subject is accomplished. If there is inadequate data for comparison the search is then expanded into other similar markets. The preparation of this report and the value indications adopted resulted from the utilization of numerous investigations and analyses. Further investigations undertaken and major data sources follow.

1
2 *Uniform Standards of Professional Appraisal Practice (USPAP) 2008*, line 382-457, SR 1-2, 2-2.
3 *Uniform Standards of Professional Appraisal Practice (USPAP)* 2008 Definitions, line 136.
4 *Uniform Standards of Professional Appraisal Practice (USPAP) 2008*, line 328-360
The Appraisal of Real Estate, 12th ed., op. cit., p. 621.

Problem Identification:[5]

> *An appraiser must gather and analyze information about those assignment elements that are necessary to properly identify the appraisal, appraisal review or appraisal consulting problem to be solved.*[6]

The purpose of this report is to estimate the value of the subject Easement, as of April 16, 2021, for internal management purposes for the holder of the Easement, and the property owner of the land that is encumbered by the subject Easement.

Data Collection:

In an effort to obtain credible results the following information source were researched and methodology followed. This a minimum list and additional sources or analysis may have been developed during the course of the analysis and verification process.

Area and Neighborhood Analysis:

Major sources utilized include the Arizona Department of Economic Security and the Arizona Real Estate Center of Arizona State University, Maricopa County, and the City of Mesa. Further data was abstracted from various other Arizona business publications. Because this is an appraisal report in a summary format, no detailed analysis of the neighborhood is presented herein.

Site Description and Analysis:

The site description and analysis was based on a personal inspection by the Appraiser, and discussions with Andrew Cohn, the authorized representative of Pacific Proving, LCC, as well as review of the subject Easement, site surveys and other pertinent data pertaining to the Easement and the subject land.

Maricopa County and the City of Mesa provided zoning information and information relative to the availability of utility infrastructure. Other sources of information included the Federal Emergency Management Agency, the Maricopa County Assessor's Office, and the Maricopa County Treasurer's Office.

Market Data Program:

Comparable sales data were obtained from public records search include, but not limited to, Co-Star data services.

---

[5] *Uniform Standards of Professional Appraisal Practice (USPAP) 2008* , line 373-396.
[6] *Uniform Standards of Professional Appraisal Practice (USPAP) 2008,* line 374-375.

Hazardous Wastes:

The appraiser has inspected the subject property with the due diligence expected of a professional real estate appraiser. The appraiser is not qualified to detect hazardous waste and/or toxic materials. Any comment by the appraiser that might suggest the possibility of the presence of such substance should not be taken as confirmation of the presence of hazardous waste and/or toxic materials. Such determination would require investigation by a qualified expert in the field of environmental assessment.

The presence of substances such as asbestos, urea-formaldehyde foam insulation, or other potentially hazardous materials may affect the value of the property. The appraiser's value estimates are predicated on the assumption that there is no such material on or in the property that would cause a loss of value unless clearly stated.

No responsibility is assumed for any environmental conditions, or for any expertise or engineering knowledge required to discover them. The appraiser's descriptions and resulting comments are the result of the routine observations made during the appraisal process.

No environmental reports were provided to the appraisers. However, it should be noted that a Phase I report was being prepared for the subject property at the time of the appraisal. The value herein is based on the assumption that the property is free from contamination of any type. The presence of contamination and/or hazardous materials in the subject property or on the subject site renders the conclusions in this report subject to change upon review of such environmental reports.

Scope of Work Acceptability:[7]

> *"The Scope of Work must include research and analysis that are necessary to develop credible assignment results."*[8]

Our research methodology generally follows the objectives below:

1. To define the qualifying conditions of the appraisal;
2. To define the scope, purpose and function of the appraisal;
3. To identify and describe the subject property and its ownership;
4. To describe the subject area and neighborhood in adequate detail;
5. To determine the Highest and Best Use of the subject property.
6. To process, analyze and interpret the pertinent data, using one or more of the three approaches to value.
7. To estimate the values as of the date of valuation.

In accordance with the Letter of Engagement between the client and the Appraiser, this report is written as an Appraisal Report in summary format.

[7] *Uniform Standards of Professional Appraisal Practice (USPAP) 2008*, line 397-409.

There are typically two different approaches for valuation of an Easement, as follows:

"The value of an easement is usually estimated as some part of the amount of value it adds to the property it benefits;" or *"the burdened property loss in value can also be used to indicate the value of an Easement."*[8]

For valuation purposes of the subject Easement, its value is based upon the loss in value to the fee simple owner of the encumbered land due to the rights that are held by the holder of this Easement.

The Sales Comparison Approach will be utilized in determining the market value of the subject land, assuming it is unencumbered by the subject Easement. There was sufficient market data available for the application of this approach to derive the market value of the subject land.

Next, the Appraiser estimates the extent of the loss to the property owner due to the subject Easement as a percentage of the land's total estimated current fee simple market value.

The Cost Approach and the Income Approach were not considered to be appropriate valuation indicators in this analysis, since the subject property consists of vacant and unimproved land.

Disclosure Obligations:[9]

> *"The report must contain sufficient information to allow intended users to understand the scope of work performed."*[10]

This section and the Underlying Conditions/Conditions set forth the necessary disclosures to allow the intended users disclosures sufficient to understand the scope of work performed.

Summary:

Our analyses encompass historic and projected demand, current supply, and planned or new construction. The value estimates and judgments contained herein are intended to reflect the appraisers' opinion as a disinterested third party. The reader is referred to the Certification section of the report wherein the conditions are stated under which the report has been prepared. The Underlying Assumptions and Contingent Conditions section of the report presents pertinent caveats.

The report considers the various segments of the metro Phoenix real estate market and population and land use patterns in the vicinity of the subject property. Additionally, an analysis of the highest and best use of the subject property has been completed together with an investigation into the sales of comparable properties in the general area.

IDENTIFICATION OF THE PROPERTY

The subject Easement is dated April 19, 1978, and encumbers 16.69± acres of vacant and unimproved land that is located along the east side of South Ellsworth Road in the unincorporated

---

[8] Appraisal Institute, The Appraisal of Real Estate. Tenth Edition, (Chicago: Appraisal Institute, 1992), p. 131.
[9] *Uniform Standards of Professional Appraisal Practice (USPAP) 2008,* line 421-426.
[10] *Uniform Standards of Professional Appraisal Practice (USPAP) 2008,* line 421-426.

area of Maricopa County, just south of the planned extension of State Highway 24 (refer to Aerial Photo & ALTA Survey presented in this report).

The encumbered land is owned by Pacific Proving, LLC, and is a part of Maricopa County Assessor Parcel No. 313-25-859C. The total parcel of land consists of 885.17± acres, and is entirely owned by Pacific Proving, LLC.

A copy of the subject Easement and its legal description is presented in the Addenda of this appraisal report.

Client:[11]

The client of this appraisal is identified as the law firm of Beus Gilbert McGroder, PLLC c/o Paul E. Gilbert, Esq.

Intended Users of the Appraisal:[12]

The intended users of this report are the client, Pacific Proving, LLC and the Phoenix Mesa Gateway Airport Authority, and their legal and financial representatives.

PURPOSE OF THE APPRAISAL[13]

The purpose of this report is to estimate the value of the subject Easement, as of April 16, 2021, for internal management purposes for the holder of the Easement, and the property owner of the land encumbered by the subject Easement.

This appraisal report is prepared for the stated purpose and function and is not to be used, given, sold, transferred, or relied upon by any other person or persons without the prior express written permission of the authors.

DEFINITION OF MARKET VALUE

Market Value is defined as:

> *"The most probable price which a property should bring in a competitive and open market under all conditions requisite to a fair sale, the buyer and seller each acting prudently and knowledgeably, and assuming the price is not affected by undue stimulus. Implicit in this definition is the consummation of a sale as of a specified date and the passing of title from seller to buyer under conditions whereby:*
>
> - *Buyer and seller are typically motivated;*
> - *Buyer and seller are well informed or well advised, and acting in what they consider their own best interest;*
> - *A reasonable time is allowed for exposure in the open market;*
> - *Payment is made in terms of cash in United States dollars or in terms of financial arrangements comparable thereto; and,*

[11] *Uniform Standards of Professional Appraisal Practice (USPAP)* 2008, SR 1-2(a).
[12] *Uniform Standards of Professional Appraisal Practice (USPAP)* 2008. SR 1-2(a,b).
[13] *Uniform Standards of Professional Appraisal Practice (USPAP)* 2008, SR 1-2(a,b).

- *The price represents the normal consideration for the property sold unaffected by special or creative financing or sales concessions granted by anyone associated with the sale."*[14]

"As Is" Market Value is defined as:

> *"An estimate of the market value of property in the condition observed upon inspection and as it physically and legally existed without hypothetical conditions, assumptions, or qualifications as of the date the appraisal is prepared."*[15]

DEFINITION OF EASEMENT

An **Easement** is defined as:

> *"An interest in real property that conveys use, but not ownership, of a portion of an owner's property."*[16]

PROPERTY RIGHTS APPRAISED

The fee simple title is regarded as an estimate without limitations or restrictions. Anything less than the complete estate results from partial interests that are created by selling, leasing, or otherwise limiting the bundle of rights in a fee simple estate. An appraisal assignment may require the appraisal of fee simple title or a partial interest such as a leasehold estate or an easement. The three most common types of property rights involved in the appraisal process are defined as follows:

1. **Fee simple estate -** "*Absolute ownership unencumbered by any other interest or estate; subject only to the imposed by the governmental powers of taxation, eminent domain, police power, and escheat."* [17]

2. **Leased fee estate -** *"An ownership interest held by a landlord with the right of use and occupancy conveyed by lease to others. The rights of the lessor (the leased fee owner) and lessee are specified by contract terms contained within the lease."* [18]

3. **Leasehold estate -** *"The right to use and occupy real estate for a stated term and under certain conditions; conveyed by a lease."* [19]

DATE OF APPRAISAL[20]

The Appraiser inspected the subject property on April 16, 2021. The effective date of the estimated value pertaining to the subject of this appraisal report is April 16, 2021.

---

[14] *Uniform Standards of Professional Appraisal Practice*. The Appraisal Foundation, April 20, 1990 and later editions.

[15] Appraisal Policies and Practices of Insured Institutions and Service Corporations, Federal Home Loan Bank Board, (Final Rule), 12CFR, Parts 563 and 571, December 21, 1987.

[15] Appraisal Policies and Practices of Insured Institutions and Service Corporations, Federal Home Loan Bank Board, (Final Rule), 12CFR, Parts 563 and 571, December 21, 1987.

[16] Appraisal Institute, The Dictionary of Real Estate Appraisal, Fourth Edition, (Chicago: Appraisal Institute, 2002) p.102.

[17] Appraisal Institute, The Dictionary of Real Estate Appraisal, Fourth Edition, (Chicago: Appraisal Institute, 2002) p.140.

[18] Appraisal Institute, The Dictionary of Real Estate Appraisal, Fourth Edition, (Chicago: Appraisal Institute, 2002) p.161.

[19] Appraisal Institute, The Dictionary of Real Estate Appraisal, Fourth Edition, (Chicago: Appraisal Institute, 2002) p.162.

[20] *Uniform Standards of Professional Appraisal Practice (USPAP)* 2008 SR 1-2(d). and Statement Appraisal Standards No. 3 (SMT-3) and (SMT-4).

OWNERSHIP AND PROPERTY HISTORY

The subject Easement is dated April 19, 1978, and encumbers 16.69± acres of vacant and unimproved raw land that is located along the east side of South Ellsworth Road in the unincorporated area of Maricopa County, just south of the planned extension of State Highway 24. The encumbered land is owned by Pacific Proving, LLC, and is a part of Maricopa County Assessor Parcel No. 313-25-859C. The total parcel of land consists of 885.17± acres, and is entirely owned by Pacific Proving, LLC.

According to the subject Easement, for the sum of $10,500 General Motors Corporation granted to the United States of America and its assigns, a perpetual and assignable easement over and across 16.69± acres of its land.

On June 30, 2004 General Motors Corporation sold 1,805± acres of land to Pacific Proving, LLC, which included the 16.69± acres of land that the Easement encumbers. Accordingly, ownership of the land was transferred to Pacific Proving, LLC, subject to this Easement.

On August 13, 2015, the original holder of this Easement, the United States of America, assigned this Easement to the Phoenix Mesa Gateway Airport Authority.

Accordingly, the current holder of the Easement is Phoenix Mesa Gateway Airport Authority, and the current owner of the encumbered land is Pacific Proving, LLC.

A copy of the subject Easement and its legal description is presented in the Addenda of this appraisal report.

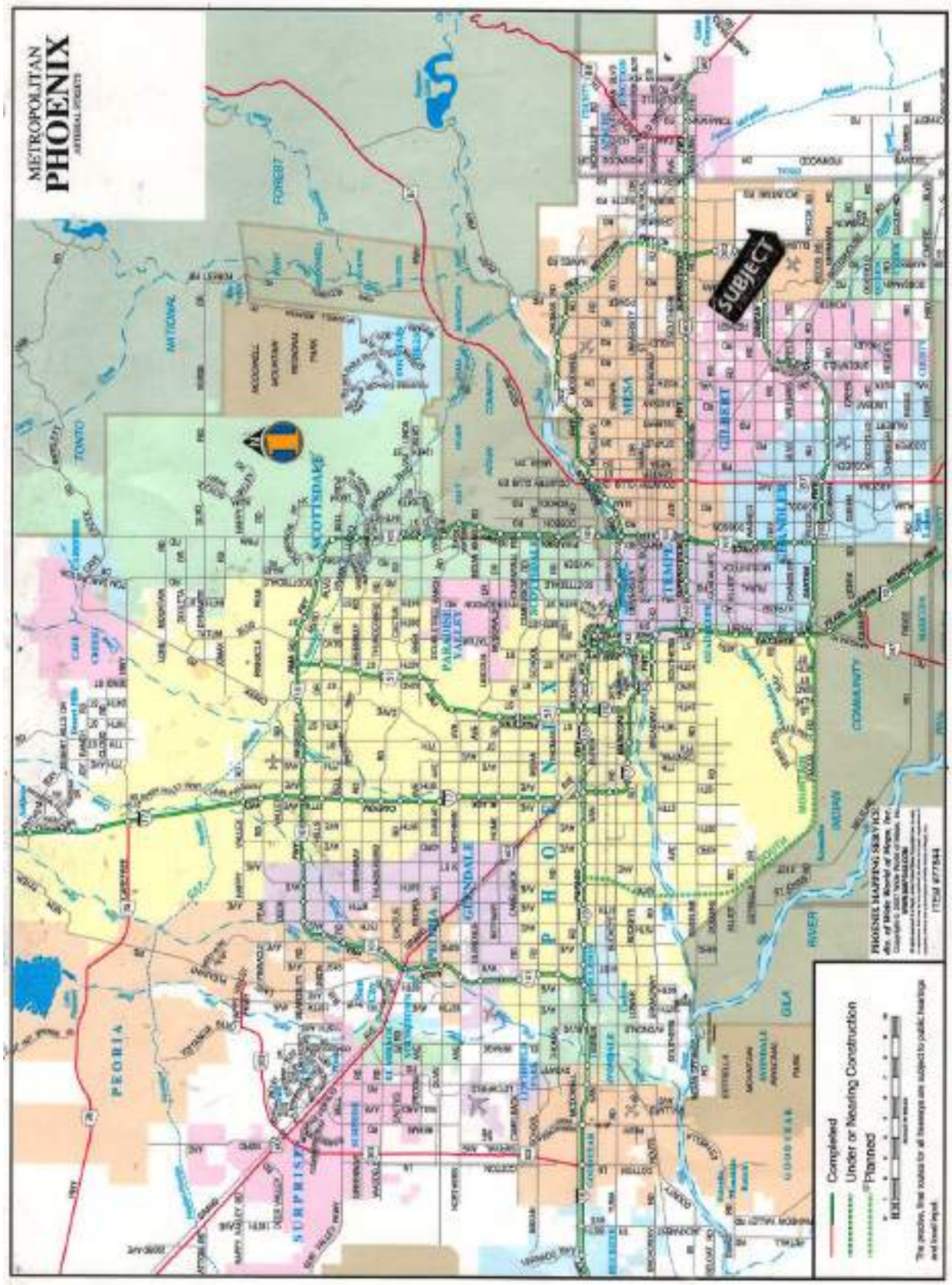
METROPOLITAN
PHOENIX
SUBJECT
Completed
Under or Nearing Construction
Planned

METROPOLITAN AREA DATA

The Phoenix metropolitan area is located near the center of the state of Arizona, in the Salt River Valley at an elevation of 1,100 feet above sea level. The Salt River Valley is a broad basin crossed by the normally dry Salt River, between its confluences with the Verde River upstream to the northeast, and the Agua Fria and Gila Rivers downstream to the southwest. Annual precipitation averages only 8.4 inches in Phoenix, which is within the Sonoran Desert. Consequently, an assured supply of water is necessary to ensure ongoing population and development growth.

The Salt River Valley is supplied with water from rain and melting snow in Arizona's mountains. To provide a dependable water source, the Salt River Project was formed to construct dams along rivers to the north and east of the Valley, and to distribute this water through a series of canals that cross the Valley. Including the Tempe Town Lake completed in recent years along the Salt River within Tempe, there are now 12 dams and reservoir lakes that provide sufficient water for agricultural, residential and commercial/industrial uses. Effective reclaimed wastewater projects have increased the overall water supply. Another important source of water for the Salt River Valley is the Central Arizona Project (CAP) that redirects Colorado River water into central Arizona. The CAP provides a vital source of water to supplement the valley's available supply.

Population

Phoenix serves as the county seat for Maricopa County as well as the state capitol of Arizona. According to the 2019 population estimates, the largest communities of metropolitan Phoenix by resident population are the City of Phoenix (1,680,992), the City of Mesa (518,012), the City of Glendale (252,381), the City of Chandler (261,165), and the City of Scottsdale (258,069). The table below shows the metro Phoenix population from 1980 to 2010 Census data, and the 2016, 2017, 2018 & 2019 population estimates.

POPULATION		
Year	**Metro Phoenix**	**Annual Percent Change**
1980 Census	1,599,970	-
1990 Census	2,238,480	4.0%
2000 Census	3,251,876	4.5%
2010 Census	4,192,887	2.9%
2016 Estimate	4,574,530	1.8%
2017 Estimate	4,683,802	2.4%
2018 Estimate	4,857,962	3.7%
2019 Estimate	4,948,203	1.9%
SOURCE: US Census & US Department of Commerce		

Arizona was the second fastest growing state in the nation throughout the 1990s, and ranked third fastest between 2005 and 2007. Maricopa County was the fastest growing county in the nation for population growth with a population that has increased by 27.2% between 2000 and 2007, which equates to 4.0% per annum, according to the U.S. Census Bureau. However, the rate of population

growth for the metro Phoenix area has slowed since 2008, according to recent population estimates.

In 2019 the metro Phoenix area became the tenth most populous metro area in the country surpassing the Boston metro area. Maricopa County remained the nation's fastest growing county over the 10-year period that ended in 2019.

Labor Force

According to the Blue Chip Economic forecast, the Valley's economic activity peaked in 2005, and the period between 2006 and 2008 experienced a somewhat slower economy. This downward trend in the economy continued through 2010 due to the downturn in the national and local economies and the continued high unemployment rate. However, since 2012 the economy began to rebound, and to steadily improve.

The total civilian labor force in metro Phoenix grew to 1,926,885 people as of 2005, an increase of approximately 7.8% since 2002. According to the Bureau of Labor Statistics, the total civilian labor force continued to increase to 2,074,050 by 2010. However, as of December 2012 the total civilian labor force experienced a gradually decrease to 2,042,915 people, which represents a decrease of 1.5% since 2010.

As of December 2016 the total civilian labor force for metro Phoenix continued to increase to 2,251,900 workers, which equates to an increase of 76,800 workers or an annual increase of 3.5% from the previous year.

As of December 2017 the total civilian labor force for metro Phoenix continued to climb to about 2,325,100 workers, which equates to an additional 73,200 workers or about a 3.3% increase compared to the previous year.

As of December 2018 the total civilian labor force for metro Phoenix continued to climb to about 2,437,300 workers, which equates to an additional 112,200 workers or about a 4.8% increase compared to the previous year.

As of December 2019 the total civilian labor force for metro Phoenix continued to climb to about 2,528,236 workers, which equates to an additional 90,936 workers or about a 3.7% increase compared to the previous year.

As of December 2020 the total civilian labor force for metro Phoenix continued to climb to about 2,536,400 workers, which equates to an additional 8,164 workers or about a 0.3% increase compared to the previous year.

Metro Phoenix Employment Structure Percentage of Total				
	2020	2019	2017	2012
Manufacturing	6.0%	6.1%	6.1%	6.3%
Mining & Construction	6.3%	6.4%	5.6%	5.0%
Trade, Transportation & Utilities	20.2%	19.5%	19.5%	20.7%
Information	1.7%	1.7%	1.6%	1.5%
Financial Activities	9.4%	8.9%	8.9%	8.1%
Professional & Business Services	16.7%	16.7%	17.3%	16.5%
Education & Health Services	15.9%	15.7%	15.0%	14.7%
Leisure & Hospitality	9.3%	10.6%	11.1%	10.3%
Other Services	3.3%	3.3%	3.0%	3.5%
Government	11.2%	11.1%	11.9%	13.4%
TOTAL	100.0%	100.0%	100.0%	100.0%

Source: AZ Dept. of Economic Security *& US Bureau of Labor Statistics*

Unemployment Rate

The unemployment rates have experienced a gradual downward trend in recent years. According to the Arizona Department of Economic Security, the unemployment rate for metro Phoenix was 6.2% in December 2013, and decreased to 5.6% by December 2014. It further decreased to 3.7% by December 2019. For comparison purposes, the Arizona and national unemployment rates are 4.9% and 3.4%, respectively, as of December 2019.

However, due to the COVID-19 virus, the unemployment rate has increased as of December 2020 to 6.7% for the United States, 7.5% for Arizona, and 6.9% for the metro Phoenix area.

Housing Conditions

In past years the metro Phoenix area had an overbuilt residential market, which has turned into a buyers market similar to many growth-oriented areas within the United States. However, the housing market has continued to improve in recent years, and property values for single family homes ins the metro Phoenix area has experienced a steady increase since 2012.

The Valley's housing market finished in 2006 with 38,753 single family permits, according to the U.S. Bureau of Census. Although this represented the fourth highest year on record for the Valley, it was down from the previous year, which had 60,926 single-family permits. In addition, the year 2007 for metro Phoenix finished with about 29,000 single-family permits, which equates to a decrease of about 25% from the previous year.

Single-family permits further declined to only about 14,375 in 2008, 8,487 in 2009 and 6,486 in 2010. This "cooling off period" has led both homebuilders and resale-home sellers to significantly cut asking prices in order to try to sell their properties. In addition, many of the homes are bank-owned which have been foreclosed and are also available for sale. However, since 2012 the residential housing market has been improving, and the number of single-family permits climbed

from 7,297 in 2011 to 11,931 in 2012, 12,884 in 2013, 15,902 in 2015, 18,015 in 2016, and 20,551 in 2017, 23,526 in 2018, and 22,900 for the first 11 months in 2019.

The median sale prices of single-family homes have significantly decreased between 2006 and 2011. However, it should be noted that during the years 2012 & 2013 sale prices for single-family homes have began to rebound and are now experiencing an upward market trend. According to the National Association of Realtors, as of the fourth quarter of 2020, the median single-family home price for the metro Phoenix area was $268,000.

For comparison purposes, the median single-family home price for the metro Phoenix area was $287,100 for the fourth quarter of 2019, $272,700 for the fourth quarter of 2018, $252,600 for the fourth quarter of 2017, $235,600 for the fourth quarter of 2016, $221,000 for the fourth quarter of 2015, $200,300 for the fourth quarter of 2014, $183,600 in 2013, $159,100 in 2012, $115,500 in 2011, $139,200 in 2010, $137,000 in 2009, $191,300 in 2008, and $257,400 in 2007.

COVID-19 Influence

In regard to the COVID-19 virus that has caused concern in the United States, as well as around the world, the Appraiser has recently contacted local industrial brokers to discuss its impact upon property values. The brokers indicated that they see no change in market values for industrial properties in the metro Phoenix area due to the COVID-19 virus. However, they noted that some of their buyer clients have expressed a wait-and-see attitude for the purchase of industrial and investment properties.

According to the Costar Market Report, the metro Phoenix economy was "on solid footing before efforts to contain the spread of the coronavirus wreaked havoc on the local economy. A pause in travel, a statewide stay-at-home order, and social distancing had brought economic activity to a near standstill…"

Efforts to contain the spread of the virus have impacted the local economy, at least in the near term. The degree to which the real estate investment market will be affected and the length are unknown.

Although some prospective buyers are reluctant to commit to a purchase at this time, they indicated that overall the buyers and sellers in the local marketplace see this as a temporary condition that will hopefully be resolved within the next several months.

Overall, the brokers indicated that in their experience so far, the COVID-19 has not negatively impacted sale prices for office/industrial properties. It is anticipated that as the economy improves and the vaccine for the COVID-19 continues to be distributed, the negative impact of the virus would decrease.

NEIGHBORHOOD MAP

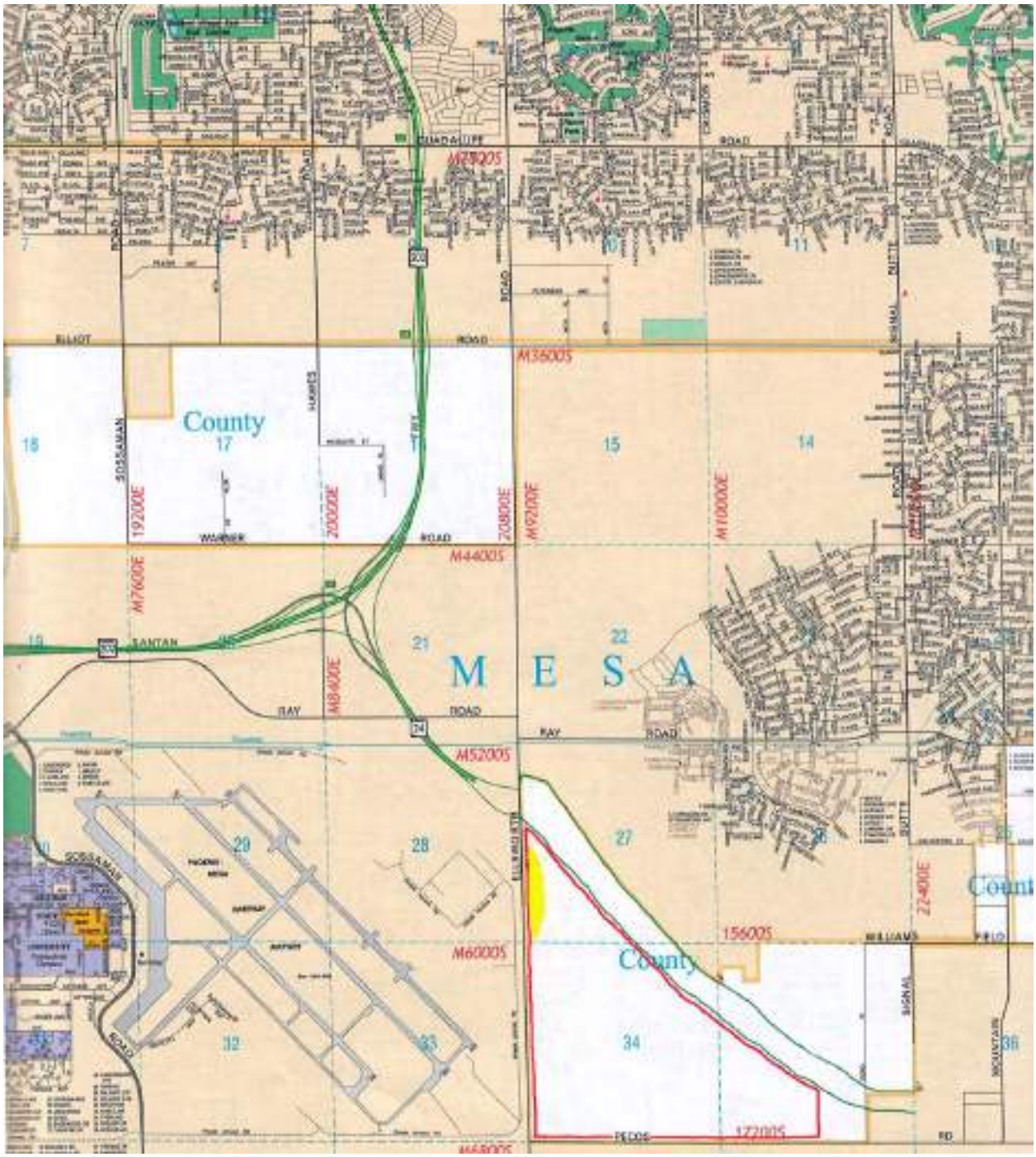

The Planned State Highway 24 Extension is Outlined in Green.
The Land Encumbered by the Subject Easement is Highlighted in Yellow.
The Total Assessor Parcel that is Held by Pacific Proving, LLC is Outlined in Red.

NEIGHBORHOOD DESCRIPTION

The land encumbered by the subject Easement is situated within the unincorporated area of Maricopa County near the southeast outskirts of Maricopa County, just east of the Phoenix-Mesa Gateway Airport, and within the city of Mesa Planning District for future annexation purposes. The subject property is located along the east side of South Ellsworth Road, just south of the planned extension of State Highway 24. It has street frontage and accessibility along South Ellsworth Road.

The subject area has good access to a major freeway with the Santan Freeway (Loop 202) extending into the cities of Gilbert and Mesa. The Santan Freeway was completed in 2006, and is part of the beltway that loops around the eastern part of metro Phoenix. This freeway is located within two miles northwest of the subject property, and provides access to the Phoenix-Mesa Gateway Airport, as well as to the subject property.

Presently, State Highway 24 connects with the Santan Freeway (Loop 202) near South Hawes Road and extends to South Ellsworth Road, just west of the subject property. This Phase I section of State Highway 24 was completed in 2014. State Highway 24 is a controlled-access highway that is planned to extend from the southeastern suburbs of Phoenix to planned ones in northwestern Pinal County.

The Phase II section of State Highway 24 (where the subject property is located) is planned to extend the highway for about five more miles of new highway from South Ellsworth Road to Ironwood Drive in Pinal County. Phase II is in still in the design phase. Completion of Phase II is planned to be in 2022, however, it was reported that this schedule is subject to change. Planning for future Phases of this highway has been halted until studies are completed to confirm how this highway will intersect with a future north-south freeway in Pinal County, and until future funding is made available.

The focal point of the subject area is the Phoenix-Mesa Gateway Airport, which is located just west of the subject property, along the west side of South Ellsworth Road, and the south side of East Ray Road. This airport was formerly known as Williams Gateway Airport between the years 1994–2008, and Williams Air Force Base between the years 1941-1993. The airport encompasses about 3,020 acres, and has three paved runways. Currently, Allegiant Air operates scheduled flights from this airport to over forty cities in the western & central parts of the country. It is a general aviation airport that is also utilized to relieve congestion at the Phoenix Sky Harbor International Airport.

The subject's surrounding area is in the process of undergoing a transition from primarily agricultural and vacant land to a medium income residential community that also includes shopping areas, offices, and light industrial uses. North of the subject property is planned for future residential uses, while to the east and south of the subject property is planned future industrial and recreational uses. To the west of the subject property, across South Ellsworth Road, is the Phoenix-Mesa Gateway Airport.

Overall, the subject property is located near the southeast outskirts of Maricopa County in close proximity to a major highway and the Phoenix-Mesa Gateway Airport. The surrounding area is in the gradual transition process from vacant land and agricultural use to a planned mixed-use community with residential, commercial, and industrial land uses.

SITE & EASEMENT DESCRIPTION

LOCATION	The land encumbered by the subject Easement is situated within the unincorporated area of Maricopa County, just east of the Phoenix-Mesa Gateway Airport, and within the city of Mesa Planning District for future annexation purposes. It is located along the east side of South Ellsworth Road, just south of the planned extension of State Highway 24, (refer to the ALTA Survey & Aerial Photo presented in this appraisal report).
LAND AREA	The subject Easement encumbers 16.69± acres of vacant and unimproved raw land.
ASSESSOR PARCEL NUMBER	The land that is encumbered by the subject Easement is part of Assessor Parcel No. 313-25-859C. This total parcel of land consists of 885.17+ acres, and is entirely owned by Pacific Proving, LLC.
EASEMENT RESTRICTIONS	According to the subject Easement dated April 19, 1978, the subject land is encumbered by a perpetual and assignable easement for "*the establishment, maintenance, operation, and use for a safety area, consisting of the right to prohibit human habitation; the right to remove buildings presently or hereafter being used for human habitation; the right to prohibit gatherings of more than twenty-five (25) persons; the right to post signs indicating the nature and extent of the control by the United States; and the right of ingress and egress over and across said land for the purpose of exercising the rights herein granted.* *SUBJECT, however, to existing easements for public roads and highways, public utilities, railroads, and pipelines.* *RESERVING, however, to the Grantor, its successors and assigns, all such rights and privileges as may be used without interfering with or abridging the rights and easement hereby granted, including, but not limited to, the right to develop and use said land for test roads for passenger car and truck tests.*"
SITE DESCRIPTION	The 16.69± acres of land that is encumbered by the subject Easement is vacant and unimproved raw land that

	is irregular in shape with a part level and part gently rolling topography (see ALTA Survey & Aerial Photo presented in this report). All necessary utilities are available to the site. It has street frontage and accessibility along the east side of South Ellsworth Road. The land is partially covered with desert vegetation.
FLOOD HAZARD	The subject property is located within a Zone X flood designation area. Zone X is located outside a special flood hazard area. Flood hazard insurance is not required.
DRAINAGE	On-site drainage is adequate based upon our inspection.
SOIL CONDITIONS	The soil conditions appear to be normal and typical of the surrounding neighborhood. We were not provided with a soil report that described the potential load bearing capability of the subject site.
ZONING	The encumbered land is zoned "IND-2" by Maricopa County, which indicates a light industrial zoning. Permitted uses within this zoning district include light manufacturing, warehousing, offices, processing, assembly, research & development, laboratories, truck terminals, wholesale distribution centers, outdoor equipment storage, and other related light industrial uses. Maximum Lot Coverage: 60% of Lot Area Minimum Building Setback: 20 feet for major street Minimum Lot Area: 6,000 square feet Minimum Lot Width: 60 feet
HAZARDOUS CONDITIONS	The Appraiser has inspected the subject property with the due diligence expected of a professional real estate appraiser, and did not observe any hazardous or environmental conditions that would adversely affect the property. However, the appraiser is not qualified to detect hazardous waste and/or toxic materials.
TAXES AND ASSESSMENTS	The 16.69± acres of encumbered land is part of a larger 885.17± acre parcel, and is not separately assessed by the Maricopa County Assessor.

HIGHEST AND BEST USE

One major objective of property analysis is to develop a conclusion about the highest and best, or most probable use of the site. The information gathered and analyzed in this report is all oriented toward that objective. The definition of highest and best use is as follows:

> *"The reasonably probable and legal use of vacant land or an improved property, which is physically possible, appropriately supported, financially feasible, and that results in the highest value. The four criteria the highest and best use must meet are legal permissibility, physical possibility, financial feasibility, and maximum profitability."*[21]

Implied within the above definition is recognition of the contribution of that specific use to community environment or to community development goals in addition to wealth maximization of individual property owners. Highest and best use results from the appraiser's judgment and analytical skill and represents an opinion, not a fact, to be found.

Four tests have been applied to the subject property in order to determine the highest and best use. The tests applied to determine highest and best use include: (1) physically possible use, (2) legally permissible use, (3) financially feasible use, and (4) maximally productive use.

Highest and Best Use - As If Vacant

The **physically possible** aspects of a site can result in constraints on the possible uses of a property. As mentioned earlier, the subject is an irregular shaped site located within a developing surrounding community near the Phoenix-Mesa Gateway Airport. The site encumbered by the subject Easement contains 16.69± acres of vacant and unimproved raw land. It has a part level and part gently rolling topography. There are no apparent drainage problems.

The subject is located in Zone X flood designation area, which is outside a special flood hazard area. Based on these observations, the physical characteristics would accommodate the development of a variety of uses.

The Maricopa County zoning and development ordinance requirements are **legally permissible** restrictions for the use of the subject site. The encumbered land is zoned "IND-2" by Maricopa County, which indicates a light industrial zoning. Permitted uses within this zoning district include light manufacturing, warehousing, offices, processing, assembly, research & development, laboratories, truck terminals, wholesale distribution centers, outdoor equipment storage, and other related light industrial uses.

According to the subject Easement, the holder of this Easement is permitted *"the establishment, maintenance, operation, and use for a safety area, consisting of the right to prohibit human habitation; the right to remove buildings presently or hereafter being used for human habitation; the right to prohibit gatherings of more than twenty-five (25) persons; the right to post signs indicating the nature and extent of the control by the United States; and the right of ingress and egress over and across said land for the purpose of exercising the rights herein granted.*

[21] Appraisal Institute, The Dictionary of Real Estate Appraisal. Fourth Edition, (Chicago: Appraisal Institute, 2002), p. 135.

SUBJECT, however, to existing easements for public roads and highways, public utilities, railroads, and pipelines.

RESERVING, however, to the Grantor, its successors and assigns, all such rights and privileges as may be used without interfering with or abridging the rights and easement hereby granted, including, but not limited to, the right to develop and use said land for test roads for passenger car and truck tests."

Upon consideration of the restrictions imposed by the subject Easement, the Appraiser believes that the owner of the encumbered land would still be able to productively utilize the property. Since the encumbered land has street frontage along South Ellsworth Road, and is in front of part of the adjoining land that is also owned by Pacific Proving, LLC, the encumbered land could serve as the entrance to the adjoining land's planned future industrial park complex, and include the access roads as well as landscaping and additional parking for the complex.

Although building improvements are prohibited under the subject Easement, the encumbered land could also be used for outdoor equipment storage, a contractor storage yard, additional truck parking, RV storage/parking, a vehicle testing track, and/or recreational purposes.

In addition, the land encumbered by the subject Easement could be used in the calculation of the lot coverage area for building development purposes in conjunction with the adjoining land owned by Pacific Proving, LLC. Under the existing IND-2 zoning, the maximum lot coverage ratio is 60%.

The highest & best use of the 16.69± acres of land that is encumbered by the subject Easement, could be for use of the above described uses in coordination with the adjoining land that is also owned by Pacific Proving, LLC.

THE VALUATION PROCESS

Typically, real estate can be appraised by applying three separate approaches to value, known as the Cost, Sales Comparison (Market) and Income Approaches. The use and applicability of each of these approaches to value are first considered. The relative merits of each approach will be weighed in respect to the property being appraised. The final market value estimate will then be derived from our analysis and opinions concerning the approaches to value that are applicable in this valuation.

Cost Approach:

The primary use of this approach is to obtain a value estimate that can be compared with value estimates from the other two approaches. The first step in this approach is to estimate the site value of the property, as if vacant. The Sales Comparison Approach is utilized to compare sales of vacant land parcels with a similar highest and best use as the subject. The second step is to construct, via the reproduction of or replacement for, the existing improvements. Accrued depreciation is then calculated and subtracted from the reproduction or replacement cost new of the structure. The land value is then added to the reproduction or replacement cost new less depreciation.

Sales Comparison (Market) Approach:

This approach is used when the appraiser derives a value indication by comparing the property being appraised to similar properties that have been sold recently. The basic steps in the comparative sales approach is to first collect and analyze the appropriate sales data. The next step is to select the appropriate units of comparison. Market supported adjustments are then added or subtracted from the comparable sale prices after comparison to the subject. The adjusted values are then applied to the subject and an estimate of value is concluded.

Income Approach:

This approach is used when the appraiser derives a value indication for income producing property by converting anticipated benefits, i.e., cash flows and reversions, into property value. First, an estimate of gross income is determined after analyzing comparable market rent data. Vacancy and collection loss is then subtracted from the gross income and an effective gross income is determined. Operating expenses are then analyzed and subtracted from the effective gross income providing the estimated net income for the property. A selection of an appropriate capitalization rate is made, and the rate is divided into the net income to provide a value estimate via the Income Approach.

There are typically two different approaches for valuation of an Easement, as follows:

"The value of an easement is usually estimated as some part of the amount of value it adds to the property it benefits;" or *"the burdened property loss in value can also be used to indicate the value of an Easement."*[8]

For valuation purposes of the subject Easement, its value is based upon the loss in value to the fee simple owner of the encumbered land due to the rights that are held by the holder of this Easement.

The Sales Comparison Approach will be utilized in determining the market value of the subject land, assuming it is unencumbered by the subject Easement. There was sufficient market data available for the application of this approach to derive the market value of the subject land.

Next, the Appraiser estimates the extent of the loss to the property owner due to the subject Easement as a percentage of the land's total estimated current fee simple market value.

The Cost Approach and the Income Approach were not considered to be appropriate valuation indicators in this analysis, since the subject property consists of vacant and unimproved land.

SALES COMPARISON APPROACH

The Sales Comparison Approach to Value is defined as:

> *"A set of procedures in which a value indication is derived by comparing the property being appraised to similar properties that have been sold recently, then applying appropriate units of comparison and making adjustments to the sale prices of the comparables based on the elements of comparison. The sale comparison approach may be used to value improved properties, vacant land, or land being considered as though vacant; it is the most common and preferred method of land valuation when an adequate supply of comparable sales data are available."*[22]

This approach to value, commonly referred to as the Market Approach, is predicated upon sales of similar properties located in the subject's surrounding or generally similar market areas.

For valuation purposes, the current fee simple market value is estimated for the 16.69± acres of the subject land, assuming it unencumbered by the subject Easement.

Next, the Appraiser estimates the extent of the loss to the property owner due to the subject Easement, which is calculated as a percentage of the land's total estimated current fee simple market value.

Following are recent sales of vacant land that are considered to be the most pertinent of the data available for analysis and will be used for direct comparison to the subject property.

Summary of Sales of Comparable Land

Comp No.	Sale Date	Sale Price	Land Area	Zoning	Price Per SF
1	3/25/21	$17,734,190	74.05 acres	"LC"	$5.50
2	9/14/20	$5,836,498	19.56 acres	"PAD"	$6.85
3	2/17/21	$1,850,000	5.86 acres	"LI"	$7.24
4	1/06/21	$8,739,000	28.28 acres	"LI"	$7.09

A sales data sheet for each comparable sale is provided on the following pages. A discussion of the adjustment process will provide a value indication by the Sales Comparison Approach.

[22] Appraisal Institute, The Dictionary of Real Estate Appraisal, Fourth Edition, (Chicago, IL: Appraisal Institute, 2002), p. 255.

LAND COMPARABLE # 1

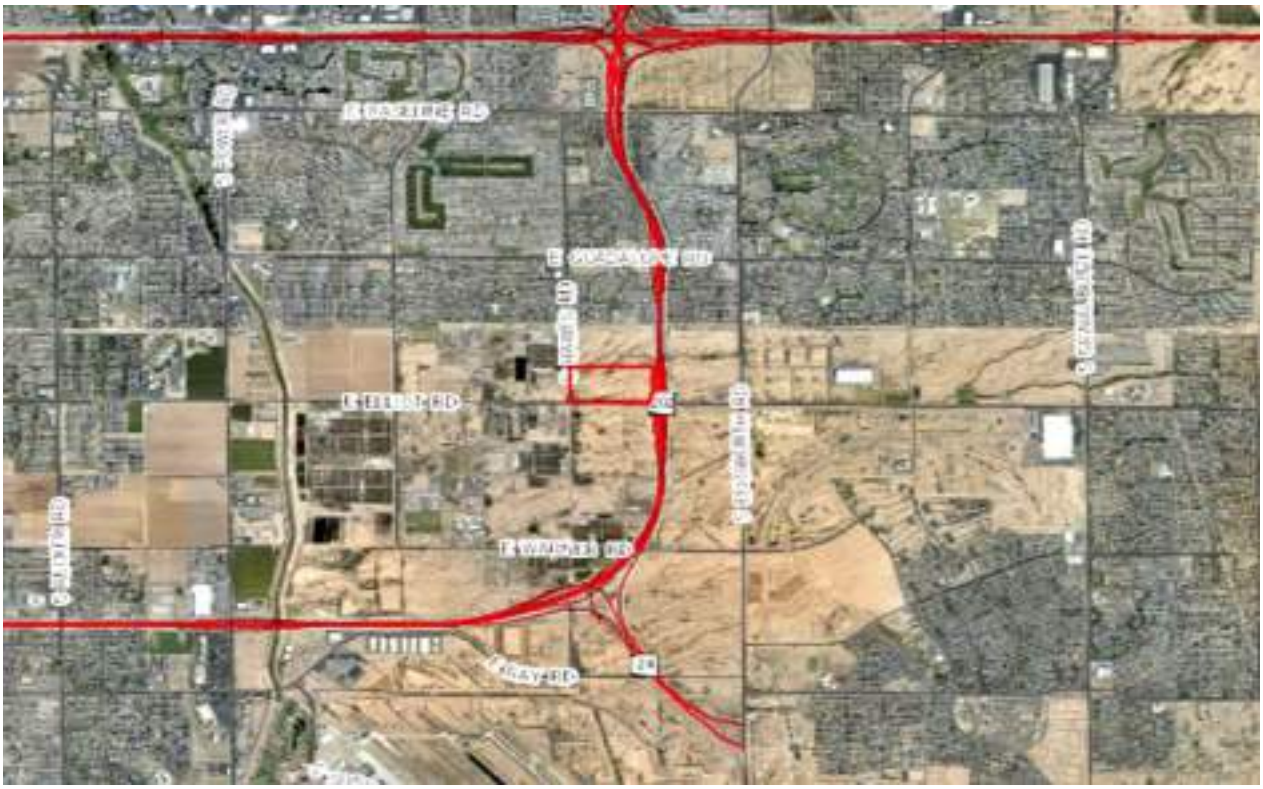

LOCATION	Northeast corner of East Elliot Road & South Hawes Road Mesa, Arizona
PARCEL NUMBERS	304-03-012U, 304-03-042A & 304-03-043A
ZONING	"LC", Limited Commercial District by the city of Mesa
GRANTOR	Loop 202 & Elliot Road Parcel #2, LLC
GRANTEE	CRP/Marwest Elliot Owner, LLC
DATE OF SALE	March 25, 2021
SALE PRICE	$17,734,190
TERMS	All cash paid to the seller
LAND AREA	3,225,618± square feet or 74.05± acres
UNIT OF COMPARISON	$5.50 per square foot
DESCRIPTION	This property consists of vacant and unimproved raw land. It has a generally rectangular shape with a generally level and slightly

	rolling topography. According to the listing broker, Peter Wentis with CBRE, the buyer will incur a cost of about $750,000 to connect the water/sewer lines to this property. This property was purchased for future industrial development. This property has good street frontage along the north side of East Elliot Road, and good highway accessibility just west of Loop 202.
SALES HISTORY	This property has not been previously sold in an arms-length transaction in the past three years.

LAND COMPARABLE # 2

LOCATION	Southeast Corner of South Power Road & East Nunneley Road Mesa, Arizona
PARCEL NUMBER	304-30-009W
ZONING	"PAD", Planned Area Development by the city of Mesa for industrial development
GRANTOR	Action Zone Business 17, LLC
GRANTEE	Power 202 Business Park, LLC
DATE OF SALE	September 14, 2020
SALE PRICE	$5,836,498
TERMS	All cash paid to the seller
LAND AREA	852,034± square feet or 19.56± acres
UNIT OF COMPARISON	$6.85 per square foot
DESCRIPTION	This property consists of unimproved agricultural land. It has a slightly irregular shape with a generally level topography. All

	necessary utilities are available to the site. According to the listing broker, Ken McQueen with Lee & Associates, the buyer plans to construct an industrial park on the land. This property has a corner location with good street frontage along the east side of South Power Road, and good highway accessibility just north of Loop 202.
SALES HISTORY	This property has not been previously sold in an arms-length transaction in the past three years.

LAND COMPARABLE # 3

LOCATION	North side of the Valley Auto Drive cul-de-sac, just South of the Superstition Freeway, and just West of South Greenfield Road Mesa, Arizona
PARCEL NUMBER	140-67-049
ZONING	"LI", Light Industrial District by the city of Mesa
GRANTOR	Lumberjack Capital, LLC
GRANTEE	Inland Kenworth, Inc.
DATE OF SALE	February 17, 2021
SALE PRICE	$1,850,000
TERMS	All cash paid to the seller
LAND AREA	255,433± square feet or 5.86± acres
UNIT OF COMPARISON	$7.24 per square foot
DESCRIPTION	This property consists of vacant and unimproved land. It has an

	irregular shape with a generally level topography. All necessary utilities are available to the site. This property was purchased for construction of a commercial truck repair facility. It has street accessibility along the north side of the Valley Auto Drive cul-de-sac. It is located just south of the Superstition Freeway (US Highway 60), and has visibility from this highway.
SALES HISTORY	This property has not been previously sold in an arms-length transaction in the past three years.

LAND COMPARABLE # 4

LOCATION	North side of East Pecos Road, West side of Signal Butte Road Mesa, Arizona
PARCEL NUMBERS	304-34-016Q, 304-34-016T, 304-34-933, 304-34-934 & 304-34-935
ZONING	"LI", Light Industrial District by the city of Mesa
GRANTOR	Signal Butte Gateway, LLC
GRANTEE	Gateway Land Investments, LLC
DATE OF SALE	January 6, 2021
SALE PRICE	$8,739,000
TERMS	All cash paid to the seller
LAND AREA	1,231,877± square feet or 28.28± acres
UNIT OF COMPARISON	$7.09 per square foot

DESCRIPTION	This property consists of vacant and unimproved raw land. It is L-shaped with a part level and part slightly rolling topography. All necessary utilities are available to the site. This property has good street frontage and accessibility along three roadways, East Pecos Road, South Signal Butte Road, and South 222nd Street.
SALES HISTORY	This property has not been previously sold in an arms-length transaction in the past three years.

COMPARABLE SALES LOCATION MAP

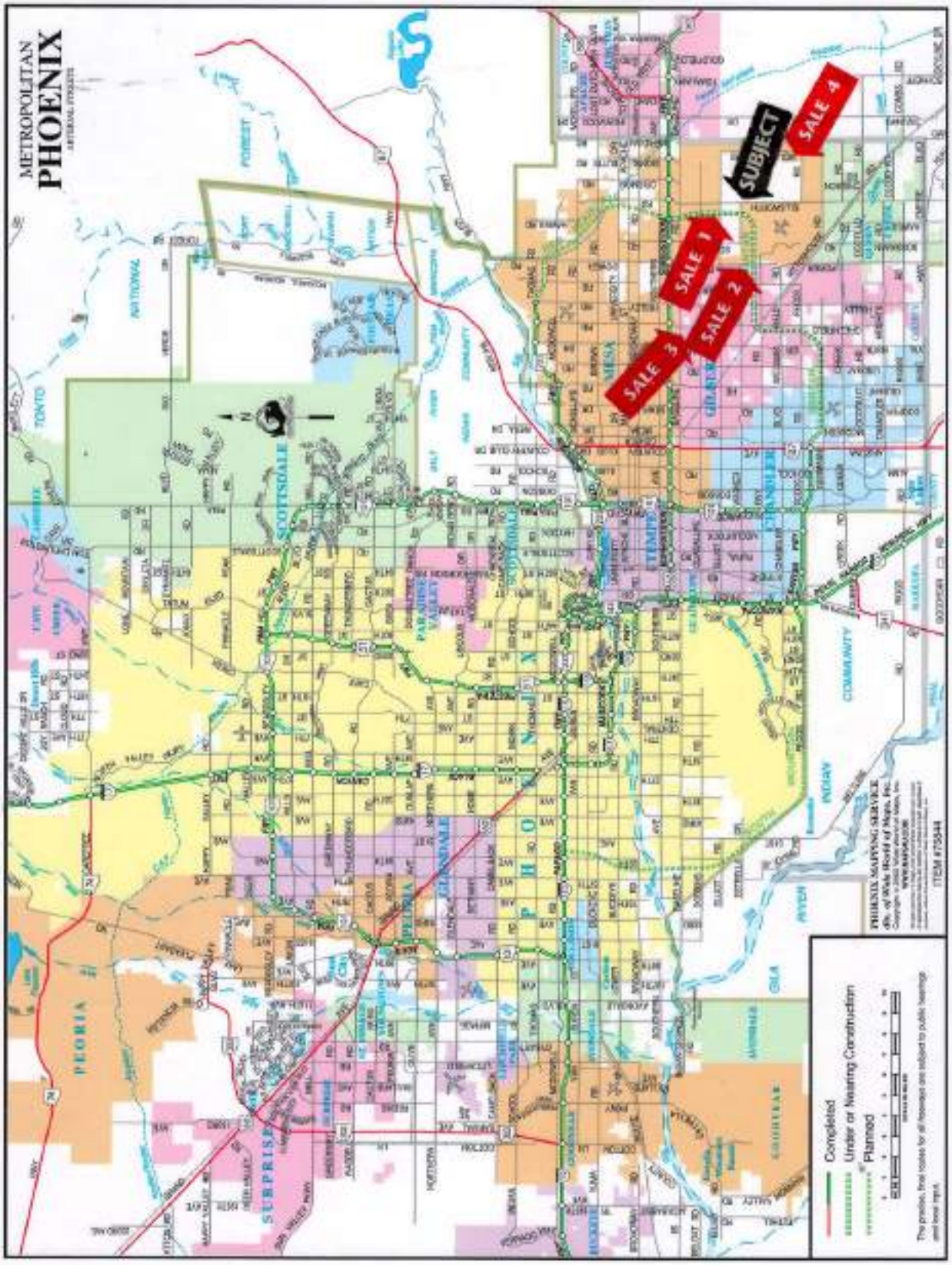

The Adjustment Process

In comparing each of the sales to the subject land, assuming it is unencumbered by the subject Easement, various elements are considered. The adjustments to the comparable land sales were made on as objective a basis as possible in an effort to account for differences from the subject. The unit of comparison used in this analysis will be the price per square foot of land area.

When analyzing the comparable properties to provide an estimate of value for the subject, it is necessary to make adjustments to the comparables' sale price. Adjustments to the comparable sales were considered on an individual basis with emphasis on property rights, conditions of sale, financial terms, current market conditions, location amenities (primary arterial frontage, surrounding land uses, corner conditions, etc.) and physical attributes (amenities, site size, and zoning).

Property Rights Conveyed: All of the sales involve fee simple property rights, which are considered to be equivalent to the subject's fee simple property rights, assuming it is unencumbered by the subject Easement.

Financing Terms: Financial adjustments are made for atypical financing when sufficient data is available to ascertain the effect of the financing on the sale. The subject was appraised on an all-cash basis to the seller. All of the comparable sales are on an all cash basis to the seller, and no adjustments are warranted.

Conditions of Sale: Buyers or sellers can be influenced by special conditions of sale that are atypical of normal market considerations for real estate transactions. An adjacent buyer may pay more for a contiguous property since they may not have an alternative for expansion or additional area. A seller may sell for less if their business is distressed. No adjustments are warranted.

Market Trend: Market trend generally involve adjustments for price differences that arise because of time. Changing economic conditions in the market are also included in this element of comparison. The oldest sale utilized in this analysis is Sale No. 2, which was transacted on September 14, 2020. Based upon discussions with industrial brokers and review of comparable market sales, no market trend adjustments are applied to the comparable properties, since there were no material increases in property values since these properties were recently sold.

Location: Location adjustments are made to comparable sales to adjust them for differences in location. Location is influenced by site exposure, street frontage, access, development trends and surrounding land uses. The subject property is located along a main local roadway in an industrial zoned surrounding area in close proximity to Loop 202 and State Highway 24, just west of the Phoenix-Mesa Gateway Airport, and just south of the planned extension of State Highway 24

Sale No. 1 is considered to have a generally similar location as the subject property, and no location adjustment is applied to this sale.

Although the subject property has superior highway accessibility compared to Sale No. 2, an offsetting location adjustment is warranted to reflect this property's superior corner location. Accordingly, no location adjustment is applied to Sale No. 2.

Although Sale No. 3 is situated in a more established surrounding area compared to the subject property, an overall upward adjustment is applied to this property to reflect the subject's superior street frontage and highway accessibility.

Although the subject property has superior highway accessibility compared to Sale No. 4, an offsetting location adjustment is warranted to reflect this property's superior corner location with frontage along three roadways. Accordingly, no location adjustment is applied to Sale No. 4.

Physical Characteristics – In this analysis, physical characteristic adjustments include adjustments for amenities (such as utility availability and/or off-site improvements), site size, and zoning.

Amenities - Amenities are defined in this analysis as any additional or lack of additional items that may affect the value of a certain piece of vacant land. Sale Nos. 2, 3 & 4 have amenities similar to the subject property, and no amenity adjustments are warranted for these properties. However, an upward adjustment is applied to Sale No. 1 to reflect the significant cost that needs to be incurred to extend the water/sewer lines to this property.

Land Area - The land area of the comparable properties in this analysis range from 5.86± acres to 74.05± acres. The subject land is approximately 16.69 acres. Sale Nos. 2 & 4 are considered to be generally similar enough in size to the subject property, and no adjustments are applied to these properties.

However, an upward adjustment is applied to Sale No. 1 to reflect its significantly larger size compared to the subject property. Generally, larger parcels are purchased for lower unit prices to reflect the economies of scale and their more limited market demand.

In addition, a downward adjustment is applied to Sale No. 3 to reflect its smaller size compared to the subject property.

Zoning/Use – The subject property and all of the comparable properties have zonings that permit industrial development, and are planned for future industrial use. An adjustment for zoning/use was considered unnecessary.

With the considerations for adjustments having been completed, the sales adjustment grid is presented on the following page, and summarizes the discussed adjustments.

LAND SALES ADJUSTMENT GRID

COMPARABLE SALE	Sale No. 1	Sale No. 2	Sale No. 3	Sale No. 4
Date of Sale	3/25/21	9/14/20	2/17/21	1/06/21
Unadjusted Sales Price	$17,734,190	$5,836,498	$1,850,000	$8,739,000
Land Area	74.05 Acres	19.56 Acres	5.86 Acres	28.28 Acres
Price Per SF	$5.50	$6.85	$7.24	$7.09
PRICE ADJUSTMENTS				
Property Rights	0%	0%	0%	0%
Financing Terms	0%	0%	0%	0%
Conditions of Sale	0%	0%	0%	0%
Market Trend (Time)	0%	0%	0%	0%
Adjusted Price/SF	$5.50	$6.85	$7.24	$7.09
SUBJECT ADJUSTMENT				
Location	0%	0%	+5%	0%
Amenities	+5%	0%	0%	0%
Land Area	+15%	0%	-10%	0%
Zoning/Use	0%	0%	0%	0%
Net Adjustments	+20%	0%	-5%	0%
Indicated Price per SF	**$6.60**	**$6.85**	**$6.88**	**$7.09**

After adjustments, the comparable properties indicate a range of unit values from $6.60 to $7.09 per square foot of land area with the mean of $6.85. Upon analysis of these market indications, a unit value of $6.85 per square foot is estimated for the subject property, assuming it is unencumbered by the subject Easement. Accordingly, the indication of market value of its fee simple interest is calculated as follows:

$6.85 per square foot	@ 727,016± square feet	=	$4,980,060
	Rounded -		**$4,980,000**

The above value of $4,980,000 indicates the estimated current market value of the fee simple interest in the 16.69± acres of land owned by Pacific Proving, LLC, assuming the land is unencumbered by the subject Easement.

For valuation purposes of the subject Easement, its value is based upon the loss in value to the fee simple owner of the land due to the rights that are provided to the holder of the subject Easement. As previously indicated in this report, the fee simple owner of the subject land, Pacific Proving, LLC, owns the entire parcel of land, Assessor No. 313-25-859C, which includes a total of 885.17 acres of land for future industrial and recreational uses (refer to the Aerial Photo).

Upon consideration of the restrictions imposed by the subject Easement, the Appraiser believes that the owner of the encumbered land would still be able to productively utilize the property. Since the encumbered land has street frontage along South Ellsworth Road, and is in front of part of the

adjoining land that is also owned by Pacific Proving, LLC, the encumbered land could serve as the entrance to the adjoining land's planned future industrial park complex, and include the access roads as well as landscaping and additional parking for the complex.

Although building improvements are prohibited under the subject Easement, the encumbered land could also be used for outdoor equipment storage, a contractor storage yard, additional truck parking, RV storage/parking, a vehicle testing track, and/or recreational purposes.

In addition, the land encumbered by the subject Easement could be used in the calculation of the lot coverage area for building development purposes in conjunction with the adjoining land owned by Pacific Proving, LLC. Under the existing IND-2 zoning, the maximum lot coverage ratio is 60%.

In summary, the 16.69± acres of land that is encumbered by the subject Easement, would be for use of the above described uses in coordination with the adjoining industrial zoned land that is also owned by Pacific Proving, LLC.

Based upon the foregoing reasons, and in consideration of the variety of land uses that are available for the encumbered subject land in coordination with the property owner's adjoining land, it is estimated that the loss of value to the fee simple owner of the subject's encumbered land is 10% of its estimated current market value.

Accordingly, the indicated value of the subject Easement is estimated to be $498,000 (10% of $4,980,000), rounded to $500,000.

RECONCILIATION AND CONCLUSION OF VALUE

For valuation purposes of the subject Easement, its value is based upon the loss in value to the fee simple owner of the encumbered land due to the rights that are held by the holder of this Easement.

The **Sales Comparison Approach** is utilized in determining the market value of the subject land, assuming it is unencumbered by the Easement. It considered recent sales of industrial land parcels in the surrounding market area. There was sufficient market data available for the application of this approach to derive the market value of the subject land, which was estimated to be $4,980,000, assuming it is unencumbered by the Easement.

Next, the Appraiser estimated the extent of the loss to the property owner due to the subject Easement as a percentage of the land's total estimated current fee simple market value, which was estimated to be 10%.

Accordingly, the indicated value of the subject Easement is estimated to be $498,000 (10% of $4,980,000), rounded to $500,000.

The Cost Approach and the Income Approach were not considered to be appropriate valuation indicators in this analysis, since the subject property consists of vacant and unimproved land.

Based upon my analysis, the value of the subject Easement, as of April 16, 2021, subject to the assumptions, limiting conditions, and certification outlined in this report, is estimated to be:

$500,000
FIVE HUNDRED THOUSAND DOLLARS

UNDERLYING ASSUMPTIONS AND LIMITING CONDITIONS

The following Underlying Assumptions and Limiting Conditions[23] apply to the property appraised herein and the appraisal report transmitted herewith.

1. Copies, Publication, Distribution, Use of the Appraisal Report:

Possession of the appraisal report or a copy of it does not carry with it the right of publication through advertising media, or any other public means of communication. It is a privileged communication. The appraisal report may not be used for any purpose other than the purpose stated in the report by any person or corporation other than the client or the party to whom it is addressed or copied without the written consent from the appraiser, and then only in its entirety. All valuations in the report are applicable only under the stated program of Highest and Best Use, and are not necessarily applicable under other programs of use. The value of a component part of the property is applicable only as a part of the whole property. The physical report remains the property of the appraiser for the use of the client, the fee being for the analytical services only.

Neither all, nor any part of the contents of this report, shall be conveyed to the public through advertising, public relations, news, sales, or other media, without the prior written consent and approval of the author, particularly as to valuation conclusions, the identity of the appraiser, or firm with which he is connected, or any reference to the Appraisal Institute, or the MAI designation. Disclosure of the contents of this report is governed by the By-Laws of Regulations of the Appraisal Institute and the Arizona Appraisal Board.

2. Third Parties:

No third parties may rely upon this appraisal report for any purpose whatsoever, including the provision of financing for the acquisition or improvement of the subject. This appraisal was prepared specifically for our client. Third parties who desire us to prepare an appraisal report on the subject property for their use should contact the signatures of this report.

3. Confidentiality:

The appraiser may not divulge the material (evaluation) contents of the report, analytical findings or conclusions, or give a copy of the report to anyone other than the client or his designee as specified in writing (except as may be required by the Appraisal Institute as they may request in confidence for ethics enforcement), or by a court of law or body with the power to subpoena. [USPAP, Ethics Provision.]

[23] *Uniform Standards of Professional Appraisal Practice* (USPAP) 2008, Edition, Standards Rule 2-1(c), 2-2.

4. Use in Entirety

This appraisal is to be used only in it its entirety and no part is to be used without the whole report. All conclusions and opinions concerning the analysis that are set forth in the report were prepared by the appraiser whose signature appears on the appraisal report, unless indicated as "Review Appraiser." No change of any item in the report shall be made by anyone other than the appraiser, and the appraiser and associated company shall have no responsibility if any such unauthorized change is made.

5. Information and Data:

No responsibility is assumed for accuracy of information furnished by or from others, the client, his designee, or public records. We are not liable for such information or the work of possible sub-contractors. The comparable data relied upon in this report has been confirmed with one or more parties familiar with the transaction or from affidavit; are considered appropriate for inclusion to the best of our factual judgment and knowledge and is accepted as satisfactory evidence upon which rests the final expression of property value. It is assumed that all information known to the client and relative to the valuation has been accurately furnished and that there are no undisclosed leases, agreements, liens, or other encumbrances affecting the use of the property.

6. Court Testimony/Consultation:

The contract for appraisal, consultation or analytical service is fulfilled and the total fee payable upon completion of the report. The appraiser or those assisting in preparation of the report will not be asked or required to give testimony in court or hearing because of having made the appraisal, in full or in part, nor engage in post appraisal consultation with client or third parties except under separate and special arrangement and at an additional fee.

7. Exhibits:

The sketches included in the report are only to aid the reader in visualizing the property and are not necessarily to scale. Sizes and dimensions should not be scaled from the sketches. Various photos, if any, are included for the same purpose and are not intended to represent the property in other than actual status, as of the date of the photo.

8. Legal, Engineering, Financial, Structural, Hidden Components:

No responsibility is assumed for matters legal in character or nature, whether existing or pending, nor matters of survey, nor of any architectural, structural, mechanical or engineering nature. The property is appraised as if free and clear, unless otherwise stated in particular parts of the report. No opinion is rendered as to the title, which

the appraiser assumes to be good and merchantable; the property is an unencumbered fee; and the property does violate any applicable codes, ordinances, statutes, or other governmental regulations. The property is appraised as though under responsible ownership and competent management. The appraiser assumes that all required licenses, certificates of occupancy, consents, or other legislative or administrative authority from any local, state, or national government or private entity or organization have been or can be obtained or renewed for any use on which the value estimate contained in this report is based.

9. Legal Description:

The legal description is assumed to be correct as used in this report as furnished by the client, his designee or as derived by the appraiser. The appraiser has neither made a legal survey nor has he commissioned one to be prepared; therefore, reference to a sketch, plat, diagram or previous survey appearing in the report is only for the purpose of assisting the reader to visualize the property.

10. Soil Conditions:

The appraiser inspected, by observation, the land and the improvements thereon; however, it was not possible to personally observe conditions beneath the soil or hidden structure, or their components, or any mechanical components within the improvements; no representations are made herein as to these matters unless specifically stated and considered in the report; the value estimate considers there being no such conditions that would cause a loss of value. The land or the soil for the area being appraised appears firm; however, subsidence in the area is unknown. The appraiser does not warrant against this condition or occurrence of problems arising from soil conditions.

11. Unapparent Conditions:

The appraisal is based on there being no hidden unapparent or apparent conditions of the property site, subsoil or structures that would render it more or less valuable. No responsibility is assumed for any such conditions or for any expertise of engineering to discover them. All mechanical components are assumed to be in operable condition and status standard for properties of the subject type. Conditions of heating, cooling, ventilating, electrical and plumbing equipment is considered to be commensurate with the condition of the balance of the improvements unless otherwise stated. No judgment is made as to adequacy of type of insulation or energy efficiency of the improvements or equipment.

12. Copyright Work:

This appraisal report is copyrighted and registered under the provisions of the United States copyright laws. It is illegal, under these laws, to reproduce any copyrighted material by any method, in whole or in part, regardless of purpose, without the permission of the copyright owner, *Lawrence Bloom*. Violation of these laws and

infringements upon copyrighted materials may result in legal action by the copyright owner against the infringer in U.S. Federal District Court.

13. Legality of Use:

The appraisal is based on the premise that there is full compliance with all applicable federal, state and local environmental regulations and laws unless otherwise stated in the report; further, that all applicable zoning, building and use regulations and restrictions of all types have been complied with unless otherwise stated in the report; further, it is assumed that all required licenses, consents, permits or other legislative or administrative authority, local, state, federal and/or private entity or organization has been or can be obtained or renewed for any use considered in the value estimate.

14. Hazardous Materials:

Unless otherwise stated in this report, the existence of hazardous material, which may or may not be present on the property, was not observed by the appraiser.

The appraisers have no knowledge of the existence of such materials on or in the property. The appraisers, however, are not qualified to detect such substances. The presence of substances such as asbestos, urea-formaldehyde foam insulation or other potentially hazardous materials may affect the value of the property. The value estimate is predicated on the assumption that there is no such material on or in the property that would cause a loss in value. No responsibility is assumed for any such conditions, or for any expertise or engineering knowledge required to discover them. The client is urged to retain an expert in this field, is desired.

15. Auxiliary and Related Studies:

No environmental or impact studies, special market study or analysis, highest and best use, analysis study or feasibility study has been requested or made unless otherwise specified in an agreement for services or in the report. The appraiser reserves the unlimited right to alter, amend, revise or rescind any of the statements, findings, opinions, values, estimates or conclusions upon any subsequent such study or analysis or previous study or analysis subsequently becoming known to him (them).

16. Dollar Values, Purchasing Power:

The market value estimated and the costs used, are as of the date of the estimate value. All dollar amounts are based on the purchasing power and price of the U.S. dollar and financing rates prevailing at the effective date of the value estimate.

17. Inclusions:

Furnishings and equipment or business operations except as specifically indicated and typically considered as a part of the real estate have been disregarded with only the real estate being considered.

18. Proposed Improvements, Conditioned Value:

Improvements proposed, if any, on or off site, as well as any repairs required are considered, for purposes of this appraisal, to be completed in good and workmanlike manner according to information submitted or considered by the appraiser. In cases of proposed construction, the appraisal is subject to change upon inspection of property after construction is completed.

19. Value Change, Dynamic Market, Influences:

The estimated market value is subject to change with market changes over time; value is highly related to exposure, time, promotional effort, terms, motivation, and conditions surrounding the offering. The value estimate considers the productivity and surrounding the offering. The value estimate considers the productivity and relative attractiveness of the property physically and economically in the relative attractiveness of the property physically and economically in the marketplace. The "Estimate of Market Value" in the appraisal report is not based in whole or in part upon race, color or national origin of the present owners or occupants of the properties in the vicinity of the property appraised.

20. Management of the Property:

It is assumed that the property, which is the subject of this report, will be under prudent and competent ownership and management, neither inefficient nor super efficient.

21. Fee:

The fee for this appraisal or study is for the service rendered and not for the time spent on the physical report.

22. Interest Appraised:

The valuation estimate applies only to the property specifically identified and described in the ensuing report. The value reported is only applicable to the property rights appraised and the report should not be used for any other purposes.

23. Federal/Professional Guidelines:

The Report has been prepared in conformity with, and is subject to the requirements of the Uniform Standards of Professional Appraisal Practice (USPAP) as promulgated by the Appraisal Standards Board of the Appraisal Foundation and required by the Arizona Board of Appraisal licensure law for all licensed State of Arizona appraisers; the appraisal standards required by Title XI of FIRREA (Federal

Financial Institutions Reform, Recovery, and Enforcement Act of 1989) and the OCC (Office of the Comptroller of the Currency); the Office of Thrift Supervision CFR insurance regulation 563.17-1a and policy statement 571.1b, effective January 7, 1988, and the Code of Professional Ethics and Standards of Professional Appraisal Practice of the Appraisal Institute.

24. Americans with Disabilities Act:

The Americans with Disabilities Act ("ADA") became effective January 26, 1992. I have not made a specific compliance survey and analysis of this property to determine whether or not it is in conformity with the various detailed requirements of the ADA. It is possible that a compliance survey of the property, together with a detailed analysis of the requirements of the ADA, could reveal that the property is not in compliance with one or more of the requirements of the Act. If so, this fact could have a negative effect upon the value of the property. Since I have no direct evidence relating to this issue, I did not consider possible noncompliance with the requirements of ADA in estimating the value of the property.

25. Property Encumbrances:

The property is appraised free and clear of any or all liens and encumbrances unless otherwise stated in this report.

26. Zoning:

It is assumed that all applicable zoning and use regulations and restrictions have been complied with unless a nonconformity has been stated, defined and considered in this appraisal report.

27. Intended User and Intended Use:

This is Appraisal Report is intended to comply with the reporting requirements set forth under the Uniform Standards of Professional Appraisal Practice. The appraisal report presents the discussions of the data, reasoning, and analysis in a summary format that were used in the appraisal process to develop the Appraiser's opinion of value.

The information contained in this report is written at a level that requires the reader to have a sophisticated knowledge of complex real estate issues, complex appraisal methodology and a geographical familiarity with the subject, and is not written for, nor expected to be understood by the public at large. The client is expected to review this report in a timely manner and if questions or concerns about this appraisal or appraisal report arise, communicate those to the appraiser in a timely manner.

28. Extraordinary Assumptions and Hypothetical Conditions[24]:

Extraordinary Assumptions are defined as: "an assumption, directly related to a specific assignment, which, if found to be false, could alter the appraiser's opinions or conclusions. Comment: Extraordinary assumptions presume as fact otherwise uncertain information about physical, legal, or economic characteristics of the subject property; or about conditions external to the property, such as market conditions or trends; or about the integrity of data used in an analysis."[25] **There are no *Extraordinary Assumptions* that apply in this report.**

Hypothetical Conditions are defined as: "that which is contrary to what exists but is supposed for the purpose of analysis. Comment: Hypothetical conditions assume conditions contrary to known facts about physical, legal, or economic characteristics of the subject property; or about conditions external to the property, such as market conditions or trends; or about the integrity of data used in an analysis."[26] **There are no *Hypothetical Conditions* that apply in this report.**

29. Jurisdictional Exception Rule[27]:

The Jurisdictional Exception Rule states "If any part of these standards is contrary to the law or public policy of any jurisdiction, only that part shall be void and of no force or effect in that jurisdiction."[28] **There are no *Jurisdictional Exceptions* that apply in this report.**

30. Acceptance of this report*:*

Separation of the signature pages from the balance of our report invalidates the value conclusion. The valuation estimate applies only to the property specifically identified and described in the ensuing report. The value reported is only applicable to the property rights appraised and the report should not be used for any other purposes. ***Acceptance of, or the use of, this appraisal report constitutes acceptance of the above conditions***.

[24] *Uniform Standards of Professional Appraisal Practice (USPAP)* 2008 Edition, Standards Rule 1-2 (f), 2-2.
[25] *Uniform Standards of Professional Appraisal Practice (USPAP)* 2008, Definitions, line 75-80.
[26] *Uniform Standards of Professional Appraisal Practice (USPAP)* 2008, Definitions, line 8287.
[27] *Uniform Standards of Professional Appraisal Practice* (USPAP) 2008, line 87-87, lines 427-447.
[28] *Uniform Standards of Professional Appraisal Practice* (USPAP) 2008, line 428-429.

CERTIFICATION

The undersigned do hereby certify[29] that, except as otherwise noted in this appraisal report:

1. The statements of fact contained in this report are true and correct [S.R. 2-3, 5-3, USPAP].
2. The reported analyses, opinions, and conclusions are limited only by the reported assumptions and limiting conditions, and are our personal, impartial, and unbiased professional analyses, opinions, and conclusions [S.R. 2-3, 5-3, USPAP].
3. I have no present or prospective interest in the property that is the subject of this report, and I have no personal interest with respect to the parties involved [S.R. 2-3, 5-3, USPAP].
4. I have no bias with respect to the property that is the subject of this report or to the parties involved with this assignment [S.R. 2-3, 5-3, USPAP].
5. My engagement in this assignment was not contingent upon developing or reporting predetermined results [S.R. 2-3, 5-3, USPAP].
6. My compensation for completing this assignment is not contingent upon reporting of a predetermined value or direction in value that favors the cause of the client, the amount of the value opinion, the attainment of a stipulated result, or the occurrence of a subsequent event directly related to the intended use of this appraisal [S.R. 2-3,5-3, USPAP].
7. My analyses, opinions, and conclusions were developed, and this report has been prepared, in conformity with the Uniform Standards of Professional Appraisal Practice (USPAP) published and copyrighted by the Appraisal Foundation and the Arizona Appraisal Board and the standards and reporting requirements of the Code of Professional Ethics and the Standards of Professional Practice of the Appraisal Institute [S.R. 2-3, 5-3, USPAP].
8. Lawrence E. Bloom, MAI made a personal inspection of the subject property, prepared the gathering of data and performed the analyses, completed the various exhibits, derived the value indications and formulated the opinion of value expressed in this report. [S.R. 2-3, 5-3, USPAP].
9. No other persons than those listed herein provided significant professional real property appraisal or appraisal consulting assistance to the persons signing this report. [S.R. 2-3, 5-3, USPAP].
10. Lawrence E. Bloom, MAI is currently certified under the State of Arizona's Appraisal Board mandatory appraiser licensing and continuing education program. [A.R.S. Section 32-3601].
11. The appraiser has reviewed the Competency Provision of the USPAP and is in full compliance with this provision [Competency Provisions - USPAP].
12. I certify that, to the best of my knowledge and belief, the reported analyses, opinions and conclusions were developed, and this report has been prepared, in conformity with the requirements of the Code of Professional Ethics and the Standards of Professional Appraisal Practice of the Appraisal Institute.
13. I certify that the use of this report is subject to the requirements of the Appraisal Institute relating to review by its duly authorized representatives.

[29] *Uniform Standards of Professional Appraisal Practice (USPAP) 2008*.

14. As of the date of this report, Lawrence E. Bloom, MAI has completed the requirements of the continuing education program of the Appraisal Institute.

15. The undersigned hereby acknowledges that he has the appropriate education and experience to complete the assignment in a competent manner. The reader is referred to the appraisers' Statement of Qualifications.

16. Lawrence E. Bloom, MAI had not previously appraised the subject property.

Lawrence E. Bloom, MAI
Arizona Certified General Real Estate Appraiser, #31202, exp. 1/31/22

ADDENDA

SUBJECT EASEMENT & ITS LEGAL DESCRIPTION

OR 12949 PG 199

Williams Air Force Base, AZ
Maricopa County
Tract No. A-102

191438

Department of the Air Force

EASEMENT

EASEMENT

FOR AND IN CONSIDERATION of the sum of TEN THOUSAND FIVE HUNDRED AND NO/100 DOLLARS ($10,500.00), the receipt of which is hereby acknowledged, GENERAL MOTORS CORPORATION, a Delaware corporation, duly authorized to do business in the State of Arizona, having its principal office at 3044 West Grand Boulevard, Detroit, Michigan 48202, does hereby grant and convey to the

UNITED STATES OF AMERICA and its assigns

a perpetual and assignable easement in, on, over, and across the land described as follows:

All of that portion of the Northwest one-quarter of the Southwest one-quarter of Section Twenty-Seven (27), Township One (1) South, Range Seven (7) East of the Gila and Salt River Meridian, Maricopa County, Arizona, lying Westerly of the following described line:

Beginning at a point in the West line of said Section 27, distant along said line North 1 degree 03 minutes 11 seconds West 308.22 feet from the Southwest corner of said section, said point being a curve concave Northwesterly and having a radius of 1840.00 feet; thence Northeasterly and Northerly along said curve through a central angle of 92 degrees 12 minutes 53 seconds a distance of 2961.39 feet; thence tangent to said curve North 45 degrees 00 minutes 00 seconds West 146.06 feet to the point of ending in the West line of said section distant thereon North 1 degree 03 minutes 11 seconds West 433.33 feet from the West quarter corner of said section;

Containing 16.69 acres, more or less;

for the establishment, maintenance, operation, and use for a safety area, consisting of the right to prohibit human habitation; the right to remove buildings presently or hereafter being used for human habitation; the right to prohibit gatherings of more than twenty-five (25) persons; the right to post signs indicating the nature and extent of the control by the United States; and the right of ingress and egress over and across said land for the purpose of exercising the rights herein granted.

SUBJECT, however, to existing easements for public roads and highways, public utilities, railroads and pipelines.

RESERVING, however, to the Grantor, its successors and assigns, all such rights and privileges as may be used without interfering with or abridging the rights and easement hereby granted, including, but not limited to, the right to develop and use the said land for test roads for passenger car and truck tests.

AND THE SAID GRANTOR COVENANTS to and with the said Grantee and its assigns that it is lawfully seized and possessed in fee of the premises in which the above easement is granted; that it has a good and lawful right and power to sell and convey the said easement; that the same are free and clear of all encumbrances except as above noted; and that it will, and its successors shall, warrant and forever defend the title to said easement against the lawful claims and demands of all persons whomsoever.

SIGNED, SEALED, AND DELIVERED, this 19th day of April, 1978.

In presence of:

M. L. Colby

M. K. Cody

GENERAL MOTORS CORPORATION,
a Delaware corporation

By: R. J. Coletta

Title: Vice President

ATTEST: Margaret Angelis
Assistant Secretary

EXECUTION ACCOMPLISHED
ARDMORE REALTY DIVISION
BY J. E. Tom

STATEMENT OF QUALIFICATIONS

Lawrence E. Bloom, MAI

PROFESSIONAL DESIGNATIONS

- MAI Designation from the Appraisal Institute since 1982 (MAI Certificate No. 6434)
- Arizona Certified General Real Estate Appraiser (Certificate No. 31202)

EDUCATION

The Wharton School, University of Pennsylvania
Bachelor of Science in Economics – 1975
Major concentration in Accounting and Finance

The Real Estate Institute, New York University

Certificate in Real Estate Studies – 1978
Courses included Investment Analysis, Feasibility Analysis, Property Management, Building Construction, Advanced Real Estate Finance, and Real Estate Principles and Practices.

Attended numerous real estate courses and seminars sponsored by the Appraisal Institute, the Arizona School of Real Estate, and other real estate organizations.

Guest lectured at the graduate business schools within Baruch College (New York) and New York University in regard to real estate valuation matters.

Conducted seminars for the appraisers and attorneys with the Maricopa County Assessors Office in regard to real estate valuation matters.

Appointed to the Maricopa County Ad Hoc Property Tax Committee, which was established to review and make recommendations for changes in the property tax system in Arizona.

RANGE OF EXPERIENCE

- A real estate professional for over 25 years with extensive experience involving the appraisal of a wide variety of income-producing and special use properties in Arizona and throughout the United States and parts of Canada. Properties include manufacturing and warehouse buildings, shopping centers, office buildings, medical centers, apartment buildings, retail buildings, hotels/resorts, nursing homes, subsidized HUD projects, mini-storage, mobile home/RV parks, movie studios, mixed-use projects, assemblages and vacant land.

- Involved in appraisal, appraisal review, feasibility studies, financial projections, economic analysis, highest & best use studies and real estate investment consulting.

- Extensive experience as an expert witness in federal, state and bankruptcy courts regarding real estate valuation matters. Served as an expert witness in major litigation support assignments including the Lake Pleasant Regional Park, Arizona Biltmore Resort, Wigwam Resort, Fairmont Scottsdale Princess Resort, Pointe Hilton at Squaw Peak, Pointe Hilton at Tapatio Cliffs, Arizona Grand Resort, and San Marcos Resort & Conference Center.

- Retained by the Vancouver Stock Exchange and numerous law firms as a review appraiser to determine the accuracy and reliability of their appraisal reports.

- Wrote and published several real estate related publications involving hotels, nursing homes, assisted living facilities and independent senior housing. Publications include:

  "Resort/Hotel/Motel Directory of Metropolitan Phoenix"
  "Resort/Hotel/Motel Directory of Metropolitan Tucson"
  "Senior Care Center Guide"
  "Active Senior Living"
  "Real Estate Trends & Insights"

BUSINESS HISTORY

For over 25 years I have been a self-employed real estate appraiser/consultant and author/editor/publisher of numerous publications. The appraisal practice consists of a wide variety of assignments and clientele. Clients include banks and other financial institutions, law firms, accounting firms, family trusts, real estate developers, government agencies, and real estate investment companies.

Pannell Kerr Forster (PKF) – Principal and Director of Real Estate Appraisal (1988-1990)
An international accounting and real estate appraisal/consulting firm. As a Principal in the firm, I directed the real estate appraisal divisions for the Los Angeles and Phoenix offices. The main emphasis of our practice was in the hospitality industry, and involved the appraisal and financial feasibility of hotels, resorts and large mixed-use projects in the western part of the United States including Hawaii.

Appraisal Resources, Inc. – President (1982-1987)
Upon receiving my MAI designation in 1982, I founded this real estate appraisal/consulting company in New York, which involved the valuation of a wide variety of income-producing and investment properties. I relocated the company to Scottsdale, Arizona in 1984.

Appraisers & Planners, Inc. – Senior Appraiser (1979-1982)
A New York-based appraisal, consulting and planning company. My experience included the appraisal of a wide variety of income-producing properties in New York City and throughout the United States.

International Appraisal Company, Inc. – Staff Appraiser (1976-1978)
A New Jersey-based international appraisal company specializing in the valuation of large manufacturing facilities throughout the United States for Fortune 500 companies.

Department of Financial Institutions

State of Arizona

CGA - 31202

This document is evidence that: **LAWRENCE E. BLOOM** has complied with the provisions of Arizona Revised Statutes, relating to the establishment and operation of a:

Certified General Real Estate Appraiser

and that the Superintendent of Financial Institutions of the State of Arizona has granted this license to transact the business of a:

Certified General Real Estate Appraiser

LAWRENCE E. BLOOM

This license is subject to the laws of Arizona and will remain in full force and effect until surrendered, revoked or suspended as provided by law.

Signed in the Superintendent's office at 100 North 15th Avenue, Suite 261, in the City of Phoenix, State of Arizona, this 15th day of January, 2020.

Expiration Date : **January 31, 2022**

Keith A. Schraad
Interim Superintendent

19780606_DKT_12949_Unofficial Document

Williams Air Force Base, AZ
Maricopa County
Tract No. A-102

191436 Depa

EAS

EASEMENT

FOR AND IN CONSIDERATION of the sum of TEN THOUSAND FIVE HUNDRED AND NO/100 DOLLARS ($10,500.00), the receipt of which is hereby acknowledged, GENERAL MOTORS CORPORATION, a Delaware corporation, duly authorized to do business in the State of Arizona, having its principal office at 3044 West Grand Boulevard, Detroit, Michigan 48202, does hereby grant and convey to the

UNITED STATES OF AMERICA and its assigns

a perpetual and assignable easement in, on, over, and across the land described as follows:

All of that portion of the Northwest one-quarter of the Southwest one-quarter of Section Twenty-Seven (27), Township One (1) South, Range Seven (7) East of the Gila and Salt River Meridian, Maricopa County, Arizona, lying Westerly of the following described line:

Beginning at a point in the West line of said Section 27, distant along said line North 1 degree 03 minutes 11 seconds West 308.22 feet from the Southwest corner of said section, said point being a curve concave Northwesterly and having a radius of 1840.00 feet; thence Northeasterly and Northerly along said curve through a central angle of 92 degrees 12 minutes 53 seconds a distance of 2961.39 feet; thence tangent to said curve North 45 degrees 00 minutes 00 seconds West 144.06 feet to the point of ending in the West line of said section distant thereon North 1 degree 03 minutes 11 seconds West 433.33 feet from the West quarter corner of said section;

Containing 16.69 acres, more or less;

for the establishment, maintenance, operation, and use for a safety area, consisting of the right to prohibit human habitation; the right to remove buildings presently or hereafter being used for human habitation; the right to prohibit gatherings of more than twenty-five (25) persons; the right to post signs indicating the nature and extent of the control by the United States; and the right of ingress and egress over and across said land for the purpose of exercising the rights herein granted.

SUBJECT, however, to existing easements for public roads and highways, public utilities, railroads and pipelines.

RESERVING, however, to the Grantor, its successors and assigns, all such rights and privileges as may be used without interfering with or abridging the rights and easement hereby granted, including, but not limited to, the right to develop and use the said land for test roads for passenger car and truck tests.

AND THE SAID GRANTOR COVENANTS to and with the said Grantee and its assigns that it is lawfully seized and possessed in fee of the premises in which the above easement is granted; that it has a good and lawful right and power to sell and convey the said easement; that the same are free and clear of all encumbrances except as above noted; and that it will, and its successors shall, warrant and forever defend the title to said easement against the lawful claims and demands of all persons whomsoever.

SIGNED, SEALED, AND DELIVERED, this 19th day of April, 1978.

GENERAL MOTORS CORPORATION,
a Delaware corporation

By: P. J. Coletta

Title: Vice President

In presence of:

M. K. Colby

M. K. Colby

ATTEST: Marguerite Bonelli
Assistant Secretary

EXECUTION RECOMMENDED
ARCHIVAL HEALTH DIVISION
BY J. E. [illegible]

Tract No. A-102
Williams Air Force Base, AZ

STATE OF MICHIGAN)
) ss.
COUNTY OF WAYNE)

On this the 19th day of April, A.D. 1978, before me appeared E. J. Coletta and Marguerite Novelli to be personally known, who being by me duly sworn, did say to me that they are respectively Vice President and Assistant Secretary of GENERAL MOTORS CORPORATION, a Delaware corporation, and that the Corporate Seal affixed to the foregoing instrument is the Corporate Seal of said corporation, and the said instrument was signed and sealed in behalf of said corporation by authority of its Board of Directors; and that the said E. J. Coletta and Marguerite Novelli acknowledged the said instrument to be the free act and deed of said corporation.

Notary Public

MARILYN J. NIX
Notary Public, Calhoun County, Mich.
Acting in Wayne County, Mich.
My Commission Expires 7-1-80

My commission expires:
7-1-80

STATE OF ARIZONA }
County of Maricopa } ss

I hereby certify that the within instrument was filed and recorded at request of
Corps of Engineers
JUN 6 - 1978 8 30
in Docket 12949
on page 199-200
Witness my hand and official seal the day and year aforesaid.
Fern Freeman
County Recorder
By R Brown
Deputy Recorder
200

Phoenix-Mesa Gateway Airport

Easement Area

LEGEND

- Easement Area
- Airport Boundary
- Road Right-of-Way

N

0 500 1,000 Feet

Created: 5/13/21
Sources: PMGAA, City of Mesa & Maricopa County

Phoenix-Mesa Gateway Airport Authority makes no claims concerning the accuracy of this map nor assumes any liability resulting from the use of the information herein.
COPYRIGHT 2021

Phoenix-Mesa Gateway Airport Authority
5835 S Sossaman Road
Mesa, Arizona 85212-6014
www.gatewayairport.com

Management Information Report

To: Board of Directors
From: Chuck Odom, Chief Financial Officer
Through: J. Brian O'Neill, A.A.E., Executive Director/CEO
Re: February 2021 Financials
Date: May 18, 2021

Attached is the monthly Financials Report for March 2021.

Phoenix-Mesa Gateway Airport Authority
AIRPORT - All Operations P&L
March, 2021

	Month of March 2021				Y-T-D as of March 2021			
	Mar FY20 Actual	Mar FY21 Actual	YOY Variance	B/(W)	YTD FY20 Actual	YTD FY21 Actual	Y-T-D Variance	B/(W)
Aeronautical Operating Revenues								
Aircraft Parking	16,123	14,170	(1,953)	-12%	155,845	166,474	10,629	7%
Fuel Flowage Fees	48,392	53,885	5,493	11%	485,748	515,998	30,250	6%
Landing Fees	144,299	167,221	22,922	16%	1,017,380	1,052,494	35,114	3%
Lease Income Aero	202,723	217,088	14,365	7%	2,325,603	2,011,558	(314,045)	-14%
Fuel Sales	481,196	538,669	57,473	12%	4,822,404	4,030,169	(792,235)	-16%
Services Sold - Aero	368,351	450,174	81,823	22%	3,685,289	4,283,256	597,967	16%
Sub-total Aero Operating Revenues	1,261,084	1,441,207	180,123	14%	12,492,269	12,059,949	(432,320)	-3.5%
Non-Aeronautical Operating Revenues								
Concessions	94,585	79,540	(15,045)	-16%	680,240	492,721	(187,519)	-28%
Lease Income Non-Aero	99,353	106,781	7,428	7%	894,470	957,477	63,007	7%
Parking	200,972	217,007	16,035	8%	2,748,298	1,876,675	(871,623)	-32%
Rental Car Fees	308,613	191,278	(117,335)	-38%	1,598,128	930,161	(667,967)	-42%
Svcs Sold - Non Aero	4,727	4,248	(479)	-10%	61,880	38,822	(23,058)	-37%
Sub-total Non-Aero Operating Revenues	708,250	598,854	(109,396)	-15%	5,983,016	4,295,856	(1,687,160)	-28%
Total Operating Revenues	**1,969,334**	**2,040,061**	**70,727**	**4%**	**18,475,285**	**16,355,805**	**(2,119,480)**	**-11%**
Operating Expenses								
Costs of Goods Sold	311,678	316,944	(5,266)	-2%	2,940,814	2,212,781	728,033	25%
Personnel	721,653	682,297	39,356	5%	6,803,448	6,448,227	355,221	5%
Comm & Utilities	56,098	56,252	(154)	0%	640,307	631,031	9,276	1%
Contractual Services	399,160	397,365	1,795	0%	3,625,139	3,508,732	116,407	3%
Insurance	59,089	42,268	16,821	28%	405,514	405,117	397	0%
Other	34,690	6,627	28,063	81%	288,889	104,567	184,322	64%
Repair & Maintenance	137,627	70,806	66,821	49%	506,624	398,274	108,350	21%
Supplies & Materials	82,255	54,432	27,823	34%	770,222	552,935	217,287	28%
Air Service Incentives [2,000,000]	0	0	0	0	0	0	0	0
Operating Contingency [2,313,872]	0	0	0	0	0	0	0	0
Total Operating Expenses	**1,802,250**	**1,626,991**	**175,259**	10%	**15,980,957**	**14,261,664**	**1,719,293**	11%
Operating Income (Loss)	**167,084**	**413,070**	**245,986**	147%	**2,494,328**	**2,094,141**	**(400,187)**	-16%
	8.5%	20.2%			13.5%	12.8%		
Depreciation		1,382,604				12,790,651		
CARES Act Recovery		1,202,196						
Total-to-Date CARES Act Recovery		19,077,607						

Phoenix-Mesa Gateway Airport Authority
5835 S Sossaman Road
Mesa, Arizona 85212-6014
www.gatewayairport.com

Management Information Report

To: **Board of Directors**
From: **Chuck Odom, Chief Financial Officer**
Through: **J. Brian O'Neill, A.A.E., Executive Director/CEO**
Re: Solicitation Notification
Date: **May 18, 2021**

This report is to provide notification of the active and upcoming solicitations to help ensure compliance with the Phoenix-Mesa Gateway Airport Authority procurement transparency clause. The active activities include the following:

Active/Pending Solicitations

Type Solicitation	Number	Title	Anticipated Contract Award (Board Action)
Request for Qualifications	2021-016-RFQ	Master Developer, Gateway*East*	List Creation
Request for Proposals	2021-021-RFP	Janitorial Services	July 2021
Invitation for Bid	2021-022-IFB	ATC Communication Radios	June 2021
Request for Qualifications	2021-027-RFQ	Terminal Annex Replacement Design Services	July 2021

Future Solicitations

Type Solicitation	Number	Title	Scheduled for Release	Anticipated Contract Award (Board Action)
Invitation for Bid	2021-017-IFB	Alpha Apron Expansion Phase III	May 2021	July 2021
Invitation for Bid	2021-025-IFB	Taxiway W Rehabilitation	May 2021	July 2021
Request for Proposals	2021-019-RFP	Master Developer, Gateway*East*	May 2021	October 2021
Request for Qualifications	2021-023-RFQ	Fabrication and Installation of Signs	June 2021	September 2021

Equipment Disposals

Fiscal year totals from sales of decommissioned / nonworking equipment total $22,999.

If you have any questions about the solicitations or the procurement process, please feel free to contact me at 480-988-7613.

NOTICE AND AGENDA OF MEETING OF THE
PHOENIX-MESA GATEWAY AIRPORT AUTHORITY
BOARD OF DIRECTORS

Pursuant to A.R.S. § 38-431.02, notice is hereby given to the members of the Phoenix-Mesa Gateway Airport Authority and to the public that the Phoenix-Mesa Gateway Airport Authority will hold a meeting open to the public on **Tuesday, June 15, 2021 beginning at 9:00 a.m.** in the Board Room (Saguaro A & B) of the Gateway Administration Building, 5835 South Sossaman Road, Mesa, Arizona. Members of the Phoenix-Mesa Gateway Airport Authority may attend either in person or by telephone. The Board may vote to hold an executive session for the purpose of obtaining legal advice from the Board's attorney on any matter listed on the agenda pursuant to A.R.S. § 38-431.03 (A)(3)&(4).

The agenda for the meeting is as follows:

1. **Call to Order** (Mayor Gail Barney, Chair)
   Members of the Phoenix-Mesa Gateway Airport Authority will attend either in person or via videoconference.

2. **Roll Call** (Mayor Gail Barney, Chair)

3. **Pledge of Allegiance**

4. **Call to the Public**
   Members of the Board may not discuss items that are not on the agenda. Therefore, action taken as a result of public comment will be limited to directing staff to study the matter or scheduling the matter for further consideration and decision at a later date. Maximum of three minutes per speaker.

5. **Executive Director's Report** - J. Brian O'Neill, A.A.E., Executive Director/CEO

6. **Consent Agenda**

   a) **Minutes** of the Board Meeting held on May 18, 2021.

   b) **Resolution No. 21-16 –** Authorizing the **Denver Series of Lockton Companies, LLC (Lockton)** under the terms of its existing Insurance Broker / Risk Management Consulting Agreement with the Phoenix-Mesa Gateway Airport Authority to purchase specific lines of insurance on behalf of the Authority beginning July 1, 2021 at an aggregate premium cost of $562,585.

   c) **Resolution No. 21-17 –** Authorizing the purchase of radios and ancillary equipment for Air Traffic Control purposes from **Robinson Aviation, Inc**. in an amount not to exceed $359,354.18.

   d) **Resolution No. 21-18 –** Authorizing the purchase of the following equipment from **Frequentis USA, Inc. (Frequentis)** for the new Air Traffic Control Tower (ATCT) in an amount not to exceed $500,959.55: Voice Switch (iPosa), Voice Recorder (DIVOS), ATIS (Smart ATIS), Back-up Wind/Temp/DP (Wind Display) and GPS NTP Time Source.

   e) **Resolution No. 21-19 –** Authorizing an agreement for financial participation between the **City of Mesa** and Phoenix-Mesa Gateway Airport Authority to share state and federal lobbyist and consulting services effective July 1, 2021 in the amount of $106,406.40.

   f) **Resolution No. 21-20 –** Authorizing the purchase of international waste management services from **Stericycle, Inc. (Stericycle)** in an amount not to exceed $70,000.00 for fiscal year 2022.

g) **Resolution No. 21-21 –** Authorizing the purchase of Unleaded and Diesel fuel from the lowest priced **State contract vendor** at market prices for Airport Authority use and resale in an amount not to exceed $328,468 to provide fuel for the 2022 fiscal year.

h) **Resolution No. 21-22 –** Approving an Authorization of Services for Alpha Apron Expansion Phase IV Design Engineering Services with **Kimley-Horn & Associates** in an amount not to exceed $294,828.55 under CIP 1231.

i) **Resolution No. 21-23 –** Authorizing a 5-year contract with **Amadeus Airport IT Americas, Inc. (Amadeus)** for PROPworks Support and Maintenance in an amount not to exceed $46,057.53 for three years with (2) one-year renewal options not to exceed $16,282.73 and $16,771.22 each year respectively.

j) **Resolution No. 21-24 –** Authorizing paving services with **Ace Asphalt of Arizona**, **Inc**. for the new Cell Phone-TNC and Terminal Employee Parking Lots Project CIP 1098 in an amount not to exceed $604,733.79.

Consideration and Possible Approval of:

7. **Resolution No. 21-25 –** Authorizing the purchase of Jet A fuel and 100LL Avgas from **Ascent Aviation (World Fuel)** for Airport Authority resale for Fiscal year 2022 in the amount not to exceed $3,006,000.

8. **Election of Chair and Vice Chair**

9. **Election of Secretary and Treasurer**

10. **Board Member Comments/Announcements**

11. **Next Meeting: Tuesday, July 20, 2021 at 9:00 a.m.**

12. **Adjournment**

Persons with a disability may request a reasonable accommodation, such as a sign language interpreter, by contacting Misty Johnson at 480-988-7607 or mrjohnson@gatewayairport.com. Requests should be made as early as possible to allow time to arrange the accommodation.

Phoenix-Mesa Gateway Airport

Executive Director's Report

June 2021

Financial Snapshot

OPERATING INCOME	April		Month Variance	FYTD Comparison		FYTD Variance
	FY20	FY21		FY20	FY21	
Revenues	$1,033,974	$2,148,956	$1,114,982	$19,509,259	$18,504,760	($1,004,499)
Less Expenses	$1,412,002	$1,518,298	$106,296	$17,392,958	$15,779,351	($1,613,607)
Operating Income *(before depreciation)*	**($378,028)**	**$630,658**	**$1,008,686**	**$2,116,301**	**$2,725,409**	**$609,108**

Investment Fund Balances: As of April, Local Governmental Investment Pool (LGIP) 700 = $19,054,179; Wells Fargo; Collateralized Money Market = $4,640,363 and Collateralized CD's = $31,044,591; Total $54,739,133. PMGAA investments earned a net of $9,296 during the month.

Finance and Accounting

For the month of April 2021, Phoenix-Mesa Gateway Airport Authority (PMGAA, Authority) reported a net operating income of $630,658, compared to a net operating loss of $378,028 last April. Fiscal-Year-to-date 2021 (FYTD21), the Authority reported a total operating income of $2,725,409, compared to a total operating income of $2,116,301 during the same period in FY20. FYTD21 operating expenses were $1,613,607 less than FY20.

Through the end of April 2021, PMGAA has submitted a total of $20,530,277 for Coronavirus Aid, Relief, and Economic Security (CARES) Act operating grant reimbursements, which depletes the grant award. The reimbursements are not reflected in the operating results above. Beginning in May 2021, operating expense reimbursements will be drawn against PMGAA's Coronavirus Response and Relief Supplemental Appropriations (CRSSA) Act allocation of $4,175,796.

In 2017, PMGAA created a definition for signatory airlines operating at Phoenix-Mesa Gateway Airport (Airport, Gateway Airport) and established a program for sharing non-airline revenues with eligible signatory airlines when they exceed an established threshold of enplaned passengers (EPAX) within a fiscal year. The signatory airline EPAX threshold set in 2017 was 675,000. PMGAA plans to review this program in 2022 to determine if any adjustments are needed based on recent EPAX data. Non-airline revenues are defined as; 1) parking fees, 2) rental car fees, 3) food and beverage concessions, and 4) retail concessions.

Allegiant Air is currently Gateway Airport's sole signatory airline. In April 2021, Allegiant welcomed 64,423 EPAX at the Airport and a FYTD21 total of 488,459.

A monthly analysis of signatory airline EPAX data is included in the PMGAA Finance Department's monthly report.

PMGAA Solicitations

Active/Pending Solicitations

TYPE OF SOLICITATION	Number	Title	Anticipated Contract Award
Invitation for Bid	2021-022-IFB	ATC Communication Radios	June 2021
Request for Proposals	2021-021-RFP	Janitorial Services	July 2021
Request for Qualifications	2021-027-RFQ	Terminal Annex Modernization Design Services	July 2021
Invitation for Bid	2021-017-IFB	Alpha Apron Expansion Phase III	July 2021
Invitation for Bid	2021-025-IFB	Taxiway W Rehabilitation	July 2021
Request for Proposals	2022-001-RFP	Master Developer for Gateway***East***	October 2021

Future Solicitations

TYPE OF SOLICITATION	Number	Title	Scheduled for Release
Request for Qualifications	2022-002-RFQ	CMAR for Terminal Annex Modernization	June 2021
Request for Proposals	2022-003-RFP	Parking Access Revenue Control System	July 2021
Request for Qualifications	2022-004-RFQ	Fabrication & Installation of Signs	August 2021

Airport Operations

Passenger Activity at Gateway Airport Returning to Pre-Pandemic Levels!

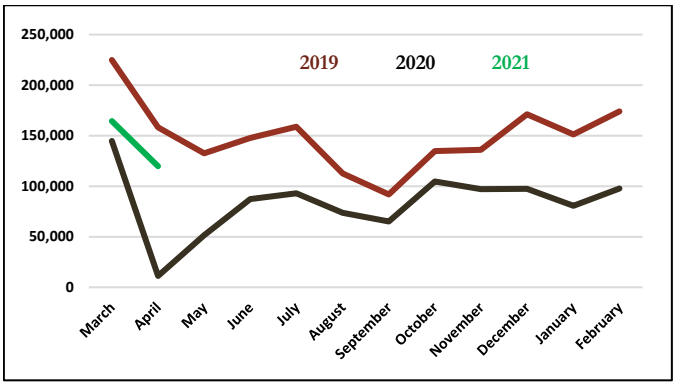

Total passenger comparison for 2019, 2020, and 2021

If you've traveled through Gateway Airport recently, you've probably noticed a steady increase in the number of passengers gathering in hold rooms, dining in restaurants, and making purchases at one of the Airport's retail shops. As the country continues to recover from the ongoing COVID-19 pandemic, airports that serve predominantly leisure markets are experiencing a noticeable surge in activity as more and more people return to the skies for much-needed vacations or to visit family and friends. During the past few months, Gateway Airport has reported a significant increase in the number of air travelers using the Airport compared to the same period last year when the world first experienced the virus outbreak. Many of them expressing comfort in the ease and convenience of traveling through a smaller airport during these uncertain times.

Allegiant, Avelo, Sun Country, and Swoop (and possibly WestJet) all plan on adding service at Gateway Airport during 2021. The Airport is hopeful that it will reach pre-pandemic passenger levels again before the end of the year.

Allegiant Announces New Nonstop Service to Pittsburgh

Pittsburgh – The Steel City and the City of Bridges!

Allegiant Air, Gateway Airport's largest airline, has announced that it will begin nonstop service between the Airport and Pittsburgh, PA on August 19, 2021. This will be the longest of Allegiant's more than 45 popular destinations served from Gateway Airport.

Pittsburgh is located in southwest Pennsylvania at the confluence of the Allegheny and Monongahela Rivers forming the Ohio River. Pittsburgh is known both as "the Steel City" for its more than 300 steel-related businesses and as the "City of Bridges" for its 446 bridges.

Provo, UT is Gateway Airport's Most Popular Destination for the 6th Consecutive Year

For the 6th consecutive year, Provo, UT is Gateway Airport's most popular destination, attracting more than 100,000 passengers during 2020. There is a strong bond between the Phoenix East Valley and Utah's third largest city. Located 43 miles south of Salt Lake City, Provo is home to Brigham Young University, breathtaking natural resources, and fine museums. At peak times during the year, Allegiant offers more than daily nonstop service between Gateway Airport and Provo. College students, young families, and the elderly especially appreciate the convenience of traveling through Gateway Airport.

Operations Statistics

PASSENGER COUNTS		April		% Change	FYTD		% Change
		FY20	FY21		FY20	FY21	
Passengers	TOTAL	**11,238**	**119,797**	**966%**	**1,286,936**	**993,329**	**-23%**
	Deplaned	3,714	54,474	1,367%	646,286	502,009	-22%
	Enplaned	7,524	65,323	768%	640,650	491,320	-23%
Allegiant	Scheduled	11,238	118,169	952%	1,253,641	988,024	-21%
WestJet	Scheduled	0	0	0%	8,763	0	-100%
Swoop	Scheduled	0	0	0%	23,892	1,698	-93%
Elite/Swift	Charter	0	1,628	100%	640	3,607	464%

OPERATIONS	April		% Change	FYTD		% Change
	FY20	FY21		FY20	FY21	
Air Carrier	248	1,146	362%	10,264	10,251	0%
Military	258	772	199%	2,761	3,736	35%
General Aviation	16,269	19,972	23%	223,086	205,094	-8%
TOTAL	**16,775**	**21,890**	**30%**	**236,111**	**219,081**	**-7%**

PMGAA Team Member Spotlight

Jeanine and Granddaughter Grace

Employee Name: Jeanine Rogers
Employee Title: Administrative Specialist
PMGAA Department: Engineering & Facilities/Business Development
Years with PMGAA: 7+

What are your job responsibilities for PMGAA? I provide administrative support for the Engineering & Facilities and Business Development Teams. I create requisitions; verify and process invoices; enter contracts; create PMGAA Board documents; coordinate agendas; take meeting minutes; and handle the ADOT Travel Reduction Program.

What is your most memorable Gateway Airport moment? I had only been a PMGAA employee for a week when I got to help with 2014 Aviation Day. What an amazing day it was to be out on the ramp with my new team members and happy attendees viewing incredible aircraft. What an exhilarating and exhausting experience!

What is something people may not know about you? I'm not "outdoorsy", but I spent a week horseback packing in Yellowstone National Park! I slept in a tent (yes, on the ground), didn't shower, saddled my own horse, and rode eight hours a day. I still can't believe I did it!

Engineering and Planning

Improvements Planned for Gateway Airport's Rental Car Care Facility

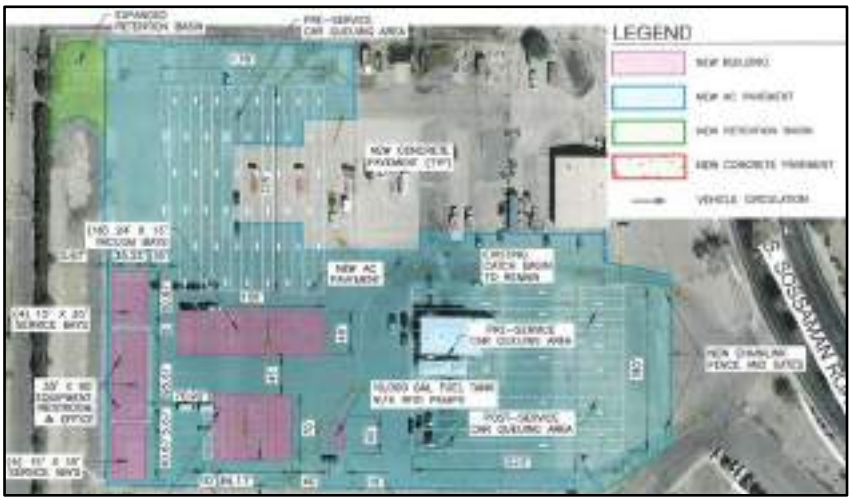

Each year, Alamo, Avis, Enterprise, and Hertz provide rental cars for many of the passengers arriving at Gateway Airport. Recently, PMGAA constructed steel shade structures over the parking spaces in the Rental Car Ready Lot to keep cars cool during the hot summer months. PMGAA is now working with the rental car companies on a project to improve Gateway Airport's rental car care facility. The project includes expanded pre- and post-service car queuing areas; wash and vacuum bays; restrooms; and office space. The approximately $4MM project will be funded using customer facility charges (CFCs). A CFC is a $2.50 per day assessment on all cars rented at Gateway Airport.

PMGAA Constructing New Employee Parking Lot and Cell Phone Lot

Parking is always at a premium at airports. To stay ahead of the growing popularity of Gateway Airport, PMGAA is constructing a new 150-space Employee Parking Lot adjacent to the terminal and a new 120-space Cell Phone Lot located at the southwest corner of Ray and Sossaman Roads.

Gateway Aviation Services

During the month of April 2021, Gateway Aviation Services (GAS), the PMGAA-operated fixed base operator (FBO), pumped more than 1.7MM gallons of aviation fuel. YTDFY21, GAS has pumped over 16MM gallons of aviation fuel.

FUEL (Gallons)	April			FYTD		
	FY20	FY21	% Change	FY20	FY21	% Change
AvGas	40,698	43,246	6%	584,042	525,073	-10%
Retail Jet A	24,268	42,343	74%	404,302	389,636	-4%
Contract	103,358	332,715	222%	3,135,837	3,667,679	17%
Commercial	323,057	1,291,645	300%	10,802,381	11,509,745	7%
TOTAL	491,381	1,709,949	248%	14,926,562	16,092,133	8%

Community Noise Report

During the month of April 2021, PMGAA received aircraft noise calls from a total of eight area residents, compared to five callers during April last year.

PMGAA is committed to help minimize aircraft noise impacts from all types of aircraft operating at Gateway Airport on our neighboring communities. Since 1994, PMGAA has developed and implemented various noise abatement programs, sought partnership-based solutions, and worked with stakeholders in a cooperative and collaborative manner. Today, PMGAA provides aircraft flight-related information to all public inquiries, obtains feedback and facilitates communication within the surrounding communities, and works with federal agencies to try and minimize aircraft noise impacts across the Phoenix East Valley region.

Should residents living in the communities surrounding the Airport have aircraft noise concerns or other questions about the operation of the Airport or aircraft activity in the Phoenix East Valley airspace, Gateway Airport's Community Relations Manager, Brian Sexton, can be reached at 480-988-7618 or bsexton@gatewayairport.com. It would be helpful if you could provide a description of the aircraft, as well as the location and time of the event (example north of US 60 just west of Kings Ranch Road a small jet aircraft making circles over the area at 2:00 PM).

CALLERS	April		FYTD	
	FY20	FY21	FY20	FY21
Total	5	8	137	145

AIRCRAFT TYPE	April		FYTD	
	FY20	FY21	FY20	FY21
	Callers	Callers	Callers	Callers
Commercial	0	1	100	63
GA Total	4	1	17	31
Helicopter	0	0	4	30
Military	1	6	16	21
Total	5	8	137	145

LOCATION	April		FYTD	
	FY20	FY21	FY20	FY21
Mesa	2	3	66	46
Gilbert	2	2	51	51
Gold Canyon	1	0	2	12
Queen Creek	0	2	7	20
Queen Valley	0	1	5	9
San Tan Valley	0	0	4	1
Apache Junction	0	0	2	0
Chandler	0	0	0	6
TOTAL	5	8	137	145

Business Development

PMGAA's Business Development Team Attends Aviation Week MRO Americas 2021

A Gateway Airport team led by PMGAA Business Development Director Shea Joachim and Business Development Analyst Joshua Jefferson attended the Aviation Week MRO Americas 2021 trade show in Orlando, FL at the end of April. Participating with PMGAA was SkyBridge Arizona/CBRE, Aviation Performance Solutions, Wetta Ventures, SRP, Gateway Executive Airpark, and the Arizona Commerce Authority. More than 5,000 people attended the show and hundreds of aviation/aerospace companies exhibited during the four-day event. The focus of the Gateway Airport team was to promote real estate projects and other development opportunities at the Airport.

PMGAA team members at MRO Americas

PMGAA Attends Mission Readiness Airlift Workshop

Matt Nebgen, GAS Director, attended the Mission Readiness Airlift (MRA) Workshop held in Salt Lake City in early May. These events are held quarterly and bring together Air National Guard (ANG) Units to bid on upcoming missions. This event was attended by 125 military personnel from various ANG units across the US. These are the decision-makers on where units will go for training operations. PMGAA was one of 13 FBO's in attendance to highlight the facilities, infrastructure, aviation services, and other benefits available to visiting ANG units.

GAS Director Matt Nebgen staffing PMGAA's booth

SkyBridge Arizona Hotel Moving Forward

Rendering of Sky Plus's New Gateway Airport Hotel

Sky Plus Hotels, an affiliate of SkyBridge Arizona, is entering the design phase of a project to build a new dual brand Wingate/Hawthorn Suites Hotel at Gateway Airport. Located on the south end of the Airport near ASU's Polytechnic Campus and other Airport businesses, the 129-room hotel will offer both standard rooms and extended stay suite accommodations and will initially feature parking and a meeting venue with a capacity of 350. The hotel, scheduled to open in Q2 2022, will include popular amenities such as an airport shuttle, fitness facility, business center, various meeting spaces, and swimming pool.

Marketing and Community Relations

Allegiant Air Launches New Nonstop Service to San Diego and Jackson Hole

Allegiant Air has launched new nonstop service between Gateway Airport and two very popular destinations just in time for the busy summer travel season. On May 27th, Allegiant began four-times-weekly (Thursday, Friday, Sunday, Monday) service to San Diego, CA and on June 2nd it began twice-weekly (Wednesday, Saturday) service to Jackson Hole, WY. Tell your family, friends, and co-workers about these new flights and book yourself a trip soon!

U.S. Department of Homeland Security Extends Enforcement Date for REAL ID

The U.S. Department of Homeland Security recently announced that the full enforcement date for the federally mandated Real ID Program will be extended once again from October 1, 2021 to May 3, 2023 due to circumstances resulting from the ongoing COVID-19 pandemic.

The Real ID Act of 2005, enacted May 11, 2005, is an Act of Congress that modifies U.S. federal law pertaining to security, authentication, and issuance procedure standards for drivers' licenses and identity documents, as well as various immigration issues pertaining to terrorism.

MINUTES OF PUBLIC MEETING OF THE
PHOENIX-MESA GATEWAY AIRPORT AUTHORITY
BOARD OF DIRECTORS | May 18, 2021

A public meeting of the Phoenix-Mesa Gateway Airport Authority (PMGAA) was convened on Tuesday, May 18, 2021, beginning at 9:00 a.m. in the Board Room (Saguaro A&B) of the Gateway Administration Building, 5835 S Sossaman Road, Mesa, Arizona.

Members Present

Mayor Gail Barney, Queen Creek
Councilmember Jim Waring, Phoenix (*via videoconference*)
Mayor John Giles, Mesa
Mayor Brigette Peterson, Gilbert (*via videoconference*)
Mayor Chip Wilson, Apache Junction
Lt. Governor Monica Antone, Gila River Indian Community (*via videoconference*)

** Neither present nor represented*

Airport Staff Present

J. Brian O'Neill, Executive Director/CEO
Scott Brownlee, Deputy Director/COO
Chuck Odom, CFO
Misty Johnson, Clerk of the Board
Jill Casson Owen, Attorney

1. **Call to Order** at 9:02 a.m. (Mayor Barney)

2. **Roll Call**

3. **Pledge of Allegiance**

4. **Call to the Public**
   There were no public comments.

5. **Executive Director's Report** J. Brian O'Neill, A.A.E., Executive Director/CEO
   Executive Director O'Neill provided a briefing on PMGAA financial performance, passenger activity, the community noise report, and various Airport projects.
   - Fiscal Year-to-Date (FYTD) Net Operating Income is $2,094,141.
   - Commercial passenger activity at Gateway Airport is recovering since a low point in April 2020 due to the COVID-19 pandemic. A FYTD21 report revealed Gateway Airport is down 32% compared to the same time in FYTD20.
   - Sun Country Airlines has announced seasonal service between Phoenix-Mesa Gateway Airport and Minneapolis beginning in November 2021.
   - Avelo Airlines celebrated its inaugural flight on May 3rd. The new, ultra-low-cost airline offers daily nonstop service to Burbank, California.
   - Allegiant Air has two new upcoming destinations. The inaugural flight to San Diego, California is on May 27th and the Jackson Hole, Wyoming inaugural flight is on June 2nd. This brings their nonstop destinations up to 47.
   - Swoop is hoping to return to Gateway Airport in October for the winter season with nonstop service to Edmonton and Winnipeg; with the possibility of adding an additional Canadian market this year.
   - WestJet Airlines has yet to make a commitment to return to Gateway Airport in the fall.

DRAFT

- Aviation Performance Solutions (APS) has completed construction of their 65,000 SF hangar/corporate headquarters located at the north end of the airfield. The ribbon cutting to officially open the new facility will be held Tuesday, May 18th.
- The construction fence is up, and the land is being cleared for construction of the Gateway Executive Airpark's 183,000 SF hangar complex. This impressive three-hangar project is comprised of both multi-tenant and single tenant lease opportunities.
- SkyBridge Arizona is moving forward with a 127-room Wyndham dual-brand hotel along Sossaman Road. The takedown package has been accepted by the Airport Authority. SkyBridge Arizona is working closely with PMGAA and the City of Mesa on the design.
- The Department of Homeland Security has announced an extension for the implementation of the federal Real ID/Arizona Travel ID program that would require a Real ID compliant driver's license or a valid passport for air travel or to enter federal buildings. The new deadline is May 3, 2023.
- Eight levels of pre-cast concrete exterior wall panels have been erected for the Airport's new air traffic control tower. Interior elevator shaft and stairway wall construction is being completed as the levels are placed.
- The Airport's newly completed passenger channelization project utilizes uniform concrete barriers to safely and efficiently direct air travelers between the terminal and their aircraft.
- PMGAA is embarking on an important project to improve car rental infrastructure at Gateway Airport.
- Terminal tenant employees will soon be moving to a new parking lot, freeing up revenue spaces in the Daily Parking Lot. PMGAA is repurposing the current cell phone lot into a new parking lot for terminal employees. A new cell phone lot is being created at the intersection of Sossaman and Ray Road.

6. **SkyBridge Annual Report** – Will Moseley, General Manager – Mesa SkyBridge, LLC
Mr. Moseley provided a brief overview of the SkyBridge Arizona Annual Report for the time period of 2020. Several aeronautical and non-aeronautical building were constructed during 2020. The development of the Unified Cargo Processing Pilot Program continues to progress.

7. **Consent Agenda**

   a) **Minutes** of the Board Meeting held on **April 20, 2021.**

   b) **Resolution No. 21-13** Approval of the amended and restated **Phoenix-Mesa Gateway Airport Authority Personnel Rules**.

   c) **Resolution No. 21-14** Authorizing a 5-year contract with Amadeus Airport IT Americas, Inc. (Amadeus) for airport common use system Software and Maintenance in an amount not to exceed $246,381.48 for three years with (2) one year renewal options not to exceed $87,103.34 and $89,716.43 each year respectively.

Mayor John Giles moved to approve the Consent Agenda.
Mayor Chip Wilson seconded the motion.
The motion was carried unanimously

Consideration and Possible Approval of:

8. **Resolution No. 21-15 –** Authorizing the **extinguishment of the 16.69-acre perpetual easement** in exchange for fair market consideration of $500,000.00, subject to the issuance of an Instrument of Release from the FAA.

   Mayor Chip Wilson moved to approve Resolution No. 21-15.
   Mayor Brigette Peterson seconded the motion.
   The motion was carried unanimously

9. **Board Member Comments/Announcements.**
   There were no comments or announcements.

10. **Next Meeting: Tuesday, June 15, 2021** at 9:00 a.m. in the Board Room (Saguaro A&B) of the Gateway Administration Building, 5835 S Sossaman Road, Mesa, Arizona. Members of the Phoenix-Mesa Gateway Airport Authority may attend either in person or by telephone/videoconference.

11. **Adjournment.**
    The meeting adjourned at 9:32 a.m.

Dated this _____ day of _____ 2021.

_____
Misty Johnson, Clerk of the Board

Phoenix-Mesa Gateway Airport Authority
5835 S Sossaman Road
Mesa, Arizona 85212-6014
www.gatewayairport.com

Board Action Item

Re: Resolution 21-16

To:	**Board of Directors**
From:	**Chuck Odom, Chief Financial Officer** **Through: J. Brian O'Neill, A.A.E., Executive Director/CEO**
Subject:	**Renewing Insurance Premiums for Airport Liability, Property & Casualty, Fiduciary, Executive Risk, Cyber, Environmental, Workers Compensation, Auto Liability, and Fuel Farm**
Date:	**June 15, 2021**

Proposed Motion

To authorize the Denver Series of Lockton Companies, LLC (Lockton) under the terms of its existing Insurance Broker / Risk Management Consulting Agreement with the Phoenix-Mesa Gateway Airport Authority to purchase specific lines of insurance on behalf of the Authority beginning July 1, 2021 at an aggregate premium cost of $562,585.

Narrative

Phoenix-Mesa Gateway Airport Authority (PMGAA) renews the following lines of insurance on a fiscal year basis: Property, Workers Compensation, Auto Liability, Airport Liability, Fuel Farm (Property and Inland Marine), D&O Employment Practice Liability, Cyber, and Fiduciary. Crime and Environmental insurance policies renew every three years.

During its marketing process, Lockton engaged several insurance carriers that provide lines of insurance coverage for airports. Insurance premiums are subject to annual increases and decreases based on many variables including, but not limited to, loss rate, marketplace demand, exposure base, and the brokers' strength in the aviation and general property/casualty marketplace. Lockton has negotiated premiums on insurance policies for the above lines of insurance for PMGAA for an amount of $562,585. These premiums are subject to change due to any new losses incurred by PMGAA until coverage is bound.

Fiscal Impact

The aggregate premium cost of $562,585 includes all three years of premium expense for Crime and Environmental policies. The actual insurance premium expense for FY22 will be $511,266 once these two policies are adjusted to reflect only FY22 related expense. The FY22 budget for insurance premiums is $517,932.

Attachment(s)

Renewal quote for lines of coverage.

RESOLUTION NO. 21-16

WHEREAS, the Phoenix-Mesa Gateway Airport Authority ("Authority"), a joint powers airport authority formed pursuant to Arizona Revised Statute §28-8521 *et seq.* owns and operates the Phoenix-Mesa Gateway Airport ("Airport"); and

WHEREAS the Authority desires to authorize the Denver Series of Lockton Companies, LLC (Lockton) under the terms of its existing Insurance Broker / Risk Management Consulting Agreement with the Phoenix-Mesa Gateway Airport Authority to purchase specific lines of insurance on behalf of the Authority beginning July 1, 2021 at an aggregate premium cost of $562,585.

NOW, THEREFORE, BE IT RESOLVED by the Board of Directors of the Authority as follows:

> **The Board of Directors of the Authority hereby authorizes the Denver Series of Lockton Companies, LLC (Lockton) under the terms of its existing Insurance Broker / Risk Management Consulting Agreement with the Phoenix-Mesa Gateway Airport Authority to purchase specific lines of insurance on behalf of the Authority beginning July 1, 2021 at an aggregate premium cost of $562,585. This resolution also authorizes the Chair or Executive Director/CEO to make such additions, deletions and changes as may be approved by the Chair or Executive Director/CEO, necessary to carry out the purposes and intent of this Resolution.**

Passed and adopted by the Authority this 15th day of June, 2021.

Gail Barney, Chair

ATTEST:

Misty Johnson, Clerk of the Board

APPROVED AS TO FORM:

Jill Casson Owen, Attorney

FY22 Financial Summary

Premium Summary | Renewing 7/1/2021

Line of Business	Carrier	Expiring Premium	Renewal Premium	$ Change	% Change
Property	Travelers	$ 130,516	$ 175,430	$ 44,914	34%
Worker's Compensation	Old Republic	$ 121,153	$ 104,662	$ (16,491)	-14%
Auto Liability	Travelers	$ 54,933	$ 59,583	$ 4,650	8%
Airport General Liability	AIG	$ 64,792	$ 71,463	$ 6,671	10%
Fuel Farm & Inland Marine	Travelers	$ 43,692	$ 50,204	$ 6,512	15%
D&O/Employment Practice Liability	Cincinnati	$ 12,359	$ 11,204	$ (1,155)	-9%
Cyber	Beazley	$ 7,600	$ 11,180	$ 3,580	47%
Crime* (3Yr Policy, 7/1/20-23)	Travelers	$ 10,826	$ 10,826	$ -	
Fiduciary	Travelers	$ 1,607	$ 1,881	$ 274	17%
Environmental** (3Yr Policy 7/1/21-24)	Beazley	$ 72,720	$ 66,152	$ (6,568)	-9%
Total - All Lines Renewing		**$ 520,198**	**$ 562,585**	**$ 42,387**	**8%**
*Crime premium shown is $10,826 for 3 years, not up for renewal in FY22. One third of the premium will be expensed in FY22					
**Environmental premium shown is for 3 years. One third of the premium will be expensed in FY22					
FY22 Insurance Premium Expense			**$ 511,266**		

Phoenix-Mesa Gateway Airport Authority
5835 S Sossaman Road
Mesa, Arizona 85212-6014
www.gatewayairport.com

Board Action Item

Re: Resolution 21-17

To:	**Board of Directors**
From:	**Margi EvanSon, Operations & Maintenance Director**
Through:	**Scott Brownlee, Deputy Director/COO**
	J. Brian O'Neill, A.A.E., Executive Director/CEO
Subject:	**CIP927 - Air Traffic Control Tower Radios**
Date:	**June 15, 2021**

Proposed Motion
To authorize the purchase of radios and ancillary equipment for Air Traffic Control purposes from Robinson Aviation, Inc. in an amount not to exceed $359,354.18.

Narrative
The existing Air Traffic Control Tower (ATCT) at Phoenix-Mesa Gateway Airport uses ground-to-air communications to meet the communication requirements in accordance with applicable FAA requirements, standards and criteria. The new ATCT requires the same clear, reliable, ground-to-air communication in use in the existing ATCT to operate with existing equipment and, in order to ensure operational continuance with no down time with communications to and from the ATCT, the equipment must run simultaneously until the final cutover. Therefore, the radio and ancillary equipment is required.

Procurement is needed to maintain program continuity and compatibility with existing equipment and concurrent operation between the New ATCT equipment and the existing ATCT equipment. The selected radios and equipment meet the dynamic communication requirements and specifications and provide reliable, clear and uninterrupted communications.

Invitation for Bid No. 2021-022-IFB for radios and ancillary equipment was issued on April 15, 2021 and advertised in the Arizona Business Gazette on April 22 and 29 and June 6, 2021. The notice was also posted on the Airport's website, as well as the AzAA and ACI-NA websites. In addition, the IFB notice was emailed to 4 prospective respondents. The bid opening was held on May 12, 2021 and three (3) bids were received. Robinson Aviation, Inc. submitted the lowest, responsive bid:

Carroll Woods, Inc. DBA Carroll Communications	$409,190.64
ACG Systems, Inc.	$360,183.00
Robinson Aviation, Inc.	***$359,354.18**

*Award amount reflects the ½% prompt payment discount.

Fiscal Impact
This expenditure is included in the FY21 capital budget as Project 927.

Attachment(s)
Quote

RESOLUTION NO. 21-17

WHEREAS, the Phoenix-Mesa Gateway Airport Authority ("Authority"), a joint powers airport authority formed pursuant to Arizona Revised Statute §28-8521 *et seq.* owns and operates the Phoenix-Mesa Gateway Airport ("Airport"); and

WHEREAS the Authority desires to authorize the purchase of radios and ancillary equipment for Air Traffic Control purposes from Robinson Aviation, Inc. in an amount not to exceed $359,354.18.

NOW, THEREFORE, BE IT RESOLVED by the Board of Directors of the Authority as follows:

> **The Board of Directors of the Authority hereby authorizes the purchase of radios and ancillary equipment for Air Traffic Control purposes from Robinson Aviation, Inc. in an amount not to exceed $359,354.18. This resolution also authorizes the Chair or Executive Director/CEO to make such additions, deletions and changes as may be approved by the Chair or Executive Director/CEO, necessary to carry out the purposes and intent of this Resolution.**

Passed and adopted by the Authority this 15th day of June, 2021.

Gail Barney, Chair

ATTEST:

Misty Johnson, Clerk of the Board

APPROVED AS TO FORM:

Jill Casson Owen, Attorney

Phoenix-Mesa Gateway Airport

Attachment I
Offeror's Bid

Item	Price
Twelve (12) New VHF Transmitters – Line Item #1	$ 140,842.80
Twelve (12) New VHF Receivers – Line Item #2	$ 91,362.60
Five (5) New UHF Transmitters – Line Item #3	$ 70,166.25
Four (4) New UHF Receivers – Line Item #4	$ 31,109.40
Operations Manual – 1 for each line item (Digital Format)	$ 0.00
Sales Tax, 8.3% (All Equipment) PMGAA is NOT tax exempt. If Offeror does not collect sales tax on behalf of the State of Arizona when invoicing, Offeror should still include tax at a rate of 7.6% for Use Tax.	$ 27,678.93
Shipping (All Equipment)	$ 0.00
Total	$ 361,159.98

Offeror's Payment Terms. Equipment: NET 30

Prompt Payment: The price(s) quoted above can be discounted by 1/2 % if payment is made within 20 days.

Exceptions / Clarifications of Offeror:
None

Delivery Time Estimate: 60-90 days

Keren Williams McLendon
Printed Name

Signature

5/10/2021
Date

Phoenix-Mesa Gateway Airport Authority
5835 S Sossaman Road
Mesa, Arizona 85212-6014
www.gatewayairport.com

Board Action Item

Re: Resolution 21-18

To:	**Board of Directors**
From:	**Margi EvanSon, Operations & Maintenance Director**
Through:	**Scott Brownlee, Deputy Director/COO**
	J. Brian O'Neill, A.A.E., Executive Director/CEO
Subject:	**CIP927 - Air Traffic Control Tower Equipment**
Date:	**June 15, 2021**

Proposed Motion

To authorize the purchase of the following equipment from Frequentis USA, Inc. (Frequentis) for the new Air Traffic Control Tower (ATCT) in an amount not to exceed $500,959.55: Voice Recorder (DIVOS), ATIS (Smart ATIS), Back-up Wind/Temp/DP (Wind Display) and GPS NTP Time Source.

Narrative

The existing ATCT at Phoenix-Mesa Gateway Airport Authority (PMGAA) currently has the following equipment: Voice Switch (iPosa), Voice Recorder (DIVOS), ATIS (Smart ATIS), Back-up Wind/Temp/DP (Wind Display) and GPS NTP Time Source from Frequentis. The new ATCT will require the same equipment from Frequentis that is currently being used in the existing ATCT and, in order to ensure operational continuance with no down time in communications to and from the ATCT, the equipment must run simultaneously until the final cutover. Therefore, the Frequentis equipment is required.

The purchase of new ATCT Equipment (iPosa, DIVOS, Smart ATIS, Wind Display, and GPS NTP Time Source) is a safety critical procurement. The iPosa and DIVOS are necessary and required systems for all Contract Towers to manage the radio and telephone lines necessary to run the control tower. The user interface allows controllers to have full visibility and control over all internal and external communication sources. The purchase of the Smart ATIS, and Wind Display products will provide a numerical and graphical display of the three wind sensors and will also display the required back-up temperature/dew point and atmospheric pressure readings. Availability of this meteorological data supports controller awareness. In addition, the new ATCT will have nine controller positions, our existing equipment for the five current positions will be installed in the new ATCT upon final cutover for cost savings.

This procurement is sole source due to the compatibility of existing equipment in the tower with the Frequentis iPosa, DIVOS, Smart ATIS, Wind Display, and GPS NTP Time Source products. This technology integrates with our existing devices, software and hardware. Frequentis is the only manufacturer of their products and the only source for purchasing their products. Therefore, in compliance with the Airport's Procurement Policy 19-27, Section VI Procurement Process, Section B, a sole source procurement waiver is requested.

Fiscal Impact

This expenditure is included in the FY21 capital budget as Project 927.

Attachment(s)

Quote **Sole Source Letter**

RESOLUTION NO. 21-18

WHEREAS, the Phoenix-Mesa Gateway Airport Authority ("Authority"), a joint powers airport authority formed pursuant to Arizona Revised Statute §28-8521 *et seq.* owns and operates the Phoenix-Mesa Gateway Airport ("Airport"); and

WHEREAS the Authority desires to authorize the purchase of the following equipment from Frequentis USA, Inc. (Frequentis) for the new Air Traffic Control Tower (ATCT) in an amount not to exceed $500,959.55: Voice Switch (iPosa), Voice Recorder (DIVOS), ATIS (Smart ATIS), Back-up Wind/Temp/DP (Wind Display) and GPS NTP Time Source.

NOW, THEREFORE, BE IT RESOLVED by the Board of Directors of the Authority as follows:

> **The Board of Directors of the Authority hereby authorizes the purchase of the following equipment from Frequentis USA, Inc. (Frequentis) for the new Air Traffic Control Tower (ATCT) in an amount not to exceed $500,959.55: Voice Switch (iPosa), Voice Recorder (DIVOS), ATIS (Smart ATIS), Back-up Wind/ Temp/DP (Wind Display) and GPS NTP Time Source. This resolution also authorizes the Chair or Executive Director/CEO to make such additions, deletions and changes as may be approved by the Chair or Executive Director/ CEO, necessary to carry out the purposes and intent of this Resolution.**

Passed and adopted by the Authority this 15th day of June, 2021.

Gail Barney, Chair

ATTEST:

Misty Johnson, Clerk of the Board

APPROVED AS TO FORM:

Jill Casson Owen, Attorney

14529_2019_01569 Phoenix-Mesa Gateway Airport New Tower Rev 4.0

Item	Offer Description	Qty	Unit Price	Total Price
001	Equipment			
	Duplicated VCS 3020X Core Switch			
1.01	CIF 12k S, Communication Server Rack	1	$8,569.37	$8,569.37
1.02	CIF6, Core Switch Comm Server Switching Interface	2	$7,253.54	$14,507.07
1.03	DIF6, Comm Server Blade	6	$4,882.85	$29,297.07
	VCS Air-Ground (Radio) and Ground-Ground (Telephone) Interfaces			
1.04	UIF Card Carrier, Card Carrier for Analog Telephone and Alarm Interfaces	2	$1,763.29	$3,526.58
1.05	GPIF 05.31, General Purpose Interface Card Controller	3	$2,269.12	$6,807.37
1.06	ERIF 03 PHIF, 4-Wire Telephone Interface	2	$1,547.57	$3,095.13
1.07	BCA 03 PHIF, 2-wire Telephone Interface FXS	1	$1,311.31	$1,311.31
1.08	BCB 03 PHIF, 2-wire Telephone Interface FXO	4	$1,454.89	$5,819.57
1.09	PRI2 Card Carrier, Card Carrier for IP Radio Interfaces	1	$1,692.76	$1,692.76
1.10	GPIF 05.51, IP Radio Interface	2	$1,830.00	$3,660.00
1.11	SALI 03, Auxiliary System Monitoring Interface	2	$844.94	$1,689.89
1.12	SRO 03, External Event Controller / Alarm Trigger (Dry Contact)	1	$1,005.39	$1,005.39
	VCS Operator and Maintenance Positions			
1.13	iPOSA3, Operator Position Touch Entry Display (TED)	5	$6,071.00	$30,355.00
1.14	iPIPA 01, Operator Position Jack Panel Module (4 jack)	8	$507.12	$4,056.98
1.15	PIP Enclosure, Operator Position Jack Panel Module Enclosure	8	$52.67	$421.34
1.16	iLSP 10, Operator Position Loudspeaker Module	5	$670.59	$3,352.97
1.17	i6POT01, Operator Position Volume Control Panel Type 01	5	$790.21	$3,951.04
1.18	i6POT03, Operator Position Volume Control Panel Type 03	4	$947.19	$3,788.75
1.19	PS 24VDC, 120-240VAC/24VDC Power Supply	5	$123.96	$619.80
1.20	Eth. Cable 100 ft, Operator Position to Core Switch CAT6 Cable	18	$138.33	$2,490.00
1.21	Eth. Cable 25 ft, Operator Position to Core Switch CAT6 Cable	2	$64.94	$129.87
1.22	Eth. Cable 06 ft, Operator Position Interposition shielded CAT6 Cable	46	$25.00	$1,150.00
1.23	Eth. Cable 02 ft, Operator Position Interposition shielded CAT6 Cable	3	$16.67	$50.00
1.24	SW: iPOS WS, Operator Position License	5	$5,565.00	$27,825.00
	VCS Technical Monitoring and Control System (TMCS)			
1.25	TMCS server, Server - rackmount 1 HU - RAID5-3HDD-Dual PS	1	$8,842.32	$8,842.32
1.26	TMCS Server Speaker, Stereo PC speaker set	1	$167.27	$167.27
1.27	KVM Drawer , 19" KVM drawer in the rack for TMCS	1	$3,143.61	$3,143.61
1.28	TMCS Client, TMCS Client Workstation, with Monitor	1	$6,736.42	$6,736.42
1.29	Keyboard, TMCS Client Workstation Keyboard	1	$30.51	$30.51
1.30	Mouse, TMCS Client Workstation Mouse	1	$30.51	$30.51
1.31	Client Speakers, TMCS Client Workstation Speakers	1	$40.65	$40.65
1.32	Eth. Cable 35 ft, TMCS Client Workstation to Cabinet LAN Cable	2	$133.33	$266.67
	DIVOS Voice Recording System			
1.33	DIVOS 04 server, DIVOS Recording Server	2	$5,833.33	$11,666.66
1.34	DIVOS Client , DIVOS Client Workstation with Monitor and Speaker	1	$2,999.06	$2,999.06
1.35	Eth. Cable 100 ft, DIVOS Client Workstation to Cabinet LAN Cable	1	$138.33	$138.33
1.36	SW: Audio Channel, DIVOS Channel Recording License	32	$326.56	$10,449.92
1.37	SW: Live Listening; DIVOS Live Listen / Channel Monitoring License	1	$2,449.19	$2,449.19
1.38	SW: Playback Client Investigate; DIVOS Replay Client License	4	$2,449.19	$9,796.76
1.39	SW: Reporting Client; DIVOS Report Center License (Alarm / Event)	1	$1,632.79	$1,632.79
1.40	SW: Analyze/Audit Client; DIVOS Audit Client License (Detailed Stat.)	1	$1,632.79	$1,632.79
	smartATIS / MET Centralized Redundant System			
1.41	smartATIS Client, smartATIS Client Workstation	1	$2,999.06	$2,999.06
1.42	iMCc6 Card Carrier , Card Carrier for ATIS Radio Interface Card iRIF	1	$1,822.22	$1,822.22
1.43	iFANc, Card Carrier Fan Module	2	$522.00	$1,044.00
1.44	iRIF2, ATIS Radio Interface Card	1	$2,522.00	$2,522.00
1.45	SW: smartDeployment, smartATIS Deployment License - per host	4	$1,525.00	$6,100.00
1.46	SW: smartATIS Client, smartATIS Client License	1	$2,541.67	$2,541.67
1.47	SW: smartATIS Loop Check, smartATIS Channel Loop Check License	1	$1,525.00	$1,525.00
1.48	SW: Nuance Vocalizer Expressive TTS Engine S/By, smart ATIS Speech Engine Stand-by License	1	$1,525.00	$1,525.00
1.49	smartMET Client, smartMET Client Workstation	1	$2,999.06	$2,999.06
1.50	SW: smartDeployment, smartMET Deployment License - per host	1	$1,525.00	$1,525.00
1.51	SW: smartMET Client, smartMET Client License	1	$3,812.50	$3,812.50
1.52	TAP Server, smartATIS and smartMET Media Server	2	$5,833.33	$11,666.67
1.53	MGT Server, smartATIS and smartMET Management Server	1	$6,666.67	$6,666.67

Copright Frequentis 2020

	smartATIS Listen In via Analog Phone			
1.55	iLIF3Card Carrier, Card Carrier for ATIS Phone Interface Card	1	$2,863.72	$2,863.72
1.56	FXO 05, ATIS 2-wire Phone Interface Card	1	$2,503.61	$2,503.61
	NTP Time Source			
1.58	NTP Time Server, GPS Based NTP Time Server includes - 1U GPS referenced NTP Time Server - Pre amplified GPS Antenna - GPS inline surge arrestor	1	$4,466.00	$4,466.00
	Network and Cabinet Power Subsystem			
1.59	DC Power Supply Rack, Cabinet DC Power Supply Shelf	1	$397.29	$397.29
1.60	24V Power Supply, Cabinet Power Supply 24V DC	2	$1,142.86	$2,285.72
1.61	AC Power Strip, Cabinet AC Power Strip	2	$190.88	$381.77
1.62	48 Port Distribution Switch, Distribution Layer Network Switch for Local Area Network	2	$7,990.00	$15,980.00
1.63	24 port Access Switch, Access Layer Network Switch (for Remote Transmitter Site)	1	$1,916.67	$1,916.67
	Cabinet and Ancillary Subsystem			
1.64	Cabinet, 42 HU Equipment Cabinet	2	$3,793.93	$7,587.87
1.65	OH Sensor, Cabinet Overheat Sensors	2	$116.51	$233.01
1.66	Fan Unit, 19" DC Fan Unit for Cabinet	1	$937.50	$937.50
1.67	Airflow Control Plate, 19" Airflow Control Plate	1	$201.37	$201.37
1.68	RMP, Rack Mounted Maintenance Panel	1	$190.21	$190.21
1.69	CFP 20.50, Cabinet Fuse Panel	1	$903.58	$903.58
1.70	Relay Module, External Relay Module	1	$68.06	$68.06
1.71	AL / IF Panel, Alarm Interface Panel 2HU	1	$1,578.87	$1,578.87
1.72	IDF Frame, Half frame for 66 blocks	1	$139.21	$139.21
1.73	66 Block, 66 Blocks	5	$189.53	$947.66
Sub-Total Material				**$309,526.64**
002	**Services**			
2.01	Requirement / Initial Design Review (Virtual)	1	$2,851.95	$2,851.95
2.02	Assembly, Delivery and Installation of 4-15 Position Voice Switch	1	$73,714.06	$73,714.06
2.03	Factory Acceptance Test (at Frequentis USA)	1	$6,065.55	$6,065.55
2.04	Configuration, Deployment, Installation and SAT for DIVOS, smartATIS and smartMET (includes efforts for smartATIS analog phone listen in and smartATIS/MET centralized system deployment)	1	$54,137.30	$54,137.30
2.05	12 Months Warranty - from Acceptance	1	Included	Included
2.06	Packaging and Shipping - FOB Frequentis USA, Columbia, MD	1	Included	Included
2.07	Additional on-site support to interface old position equipment and communication lines in to the new system (NTE - 3 days)	1	$7,930.30	$7,930.30
Sub-Total Services				**$144,699.16**
003	**Spares**			
3.01	24V Power Supply, Cabinet Power Supply 24V DC	1	$1,142.86	$1,142.86
3.02	CIF6, Core Switch Comm Server Switching Interface	1	$7,253.54	$7,253.54
3.03	DIF6, Comm Server Blade	1	$4,882.85	$4,882.85
3.04	GPIF 05.31, General Purpose Interface Card Controller	1	$2,269.12	$2,269.12
3.05	ERIF 03 PHIF, 4-Wire Telephone interface	1	$1,547.57	$1,547.57
3.06	BCA 03 PHIF, 2-wire Telephone Interface FXS	1	$1,311.31	$1,311.31
3.07	BCB 03 PHIF, 2-wire Telephone Interface FXO	1	$1,454.89	$1,454.89
3.08	GPIF 05.51, IP Radio Interface	1	$1,830.00	$1,830.00
3.09	SALI 03, Auxiliary System Monitoring Interface	1	$844.94	$844.94
3.10	SRO 03, External Event Controller / Alarm Trigger (Dry Contact)	1	$1,005.39	$1,005.39
1.54	iFANc, Card Carrier Fan Module	1	$522.00	$522.00
1.57	FXO 05, ATIS 2-wire Phone Interface Card	1	$2,503.61	$2,503.61
Sub-Total Spares				**$26,568.08**
Total Price without Tax				**$480,793.87**
	Maryland Sales Tax (6%)			**$20,165.68**
Total Price with Tax				**$500,959.55**

Copright Frequentis 2020

Functionality: Functionality specified in Frequentis user manual / product documentation is available with respect to installed board types and quantities.

Validity: The offer is valid for 60 days (as appropriate) from the date of this offer.

Pricing: Prices are quoted in US$ and include Maryland sales tax on material and licesense. Tax can be removed if customer provides tax exempt certificate/number. Where applicable, for international offers, VAT is not included.

Payment Terms: Please see the Project Schedule Chapter of the PSD for payment milestone

Warranty: Frequentis warranty is12 Months from Delivery. Annual Extended Warranty is offered as an option. Please see attached terms and conditions for more information.

Delivery Schedule : Estimated 7-8months after contract award and receipt of payment upon order placement. Please see the Project Schedule Chapter of the PSD for milestone schedule

Terms and Conditions: See "Frequentis Terms and Conditions" section of this offer. No other terms shall apply. Purchase Order must reference the offer number/date.

The names of the suppliers and their specific products quoted in our technical solution are for information purposes only and they can be replaced at FREQUENTIS discretion by providing a supplier/product with the same functionality as offered.

Copright Frequentis 2020

Phoenix-Mesa Gateway Airport

Memorandum

To:	**Chuck Odom, Chief Financial Officer**
From:	**Margi EvanSon, Operations & Maintenance Director**
CC:	**Marian Whilden, Procurement Officer**
Date:	**May 19, 2021**
Re:	**Sole Source Procurement**

The existing Air Traffic Control Tower (ATCT) for Phoenix-Mesa Gateway Airport Authority currently uses Frequentis equipment to manage the radio, telephone, communication and meteorological data. The new ATCT will require the same safety critical equipment that is currently being used in the existing ATCT and, in order to ensure operational continuance with no down time with communications to and from the ATCT, the equipment must run simultaneously until the final cutover. Therefore, the Frequentis equipment is required.

Frequentis, USA is the sole source provider for services and parts associated with the Frequentis Communications, Recording and Automation equipment within the United States. Sole source procurement is needed to maintain program continuity and compatibility with the existing equipment and simultaneous operation between the New ATCT equipment and the existing ATCT equipment. Therefore, in compliance with the Airport's Procurement Policy 19-27, Section VI Procurement Process, Section B, a sole source procurement waiver is requested.

Attached is the sole source letter received from Frequentis.

Acceptance:

Chuck Odom 5/24/2021

Chuck Odom, CFO Date

May 12, 2021

Subject: Frequentis USA, Sole Source Provider of Frequentis Equipment upgrade and expansion at MESA Tower

Ladies and gentlemen,

Frequentis, USA is the sole source provider for services and parts associated with the Frequentis Communications, Recording and Automation equipment within the United States. Frequentis products offered as part of the upgrade and expansion are -

- VCS 3020X voice switch will be upgraded to a new generation IP capable variant. The operator positions from the current switch will continue to be used in the upgraded system.
- Integrated DIVOS recording system will be upgraded to the latest release featuring web-based client access and full IP recording, deployed in a redundant configuration. The recorder will record ATC communications directly from the voice switch with identical number of channels, as the current installation. The existing client workstation will be reused in the upgraded system.
- smartATIS and smartMET equipment will be expanded to include additional client positions and backup / spare workstations.
- All provided equipment will utilize a shared network architecture for internal communication and connection to external systems. Any rack mounted equipment within the system will be accommodated in the Frequentis cabinets and will use the built-in power distribution components.
- The upgrade and expansion of the VCS, DIVOS and smart products will allow parallel ATC operation from the old tower and the new tower. This ensures operational continuance during transition.

Thanks for your time.

Sincerely,

Kimberly Tredway
Program Manager, Frequentis USA
Kimberly.Tredway@Frequentis.com

cc: S.Sami

FREQUENTIS USA, Inc. 8661 Robert Fulton Drive, Suite 100 Columbia MD 21046 Phone: 301-657-8001 www.frequentis.com

Phoenix-Mesa Gateway Airport Authority
5835 S Sossaman Road
Mesa, Arizona 85212-6014
www.gatewayairport.com

Board Action Item

Re: Resolution 21-19

To: Board of Directors
From: Ryan Smith, Communications & Government Relations
Through: Scott Brownlee, Deputy Director/COO
J. Brian O'Neill, A.A.E., Executive Director/CEO
Subject: State & Federal Legislative Representation and Consulting Services
Date: June 15, 2021

Proposed Motion
To authorize an agreement for financial participation between the City of Mesa and Phoenix-Mesa Gateway Airport Authority to share state and federal lobbyist and consulting services effective July 1, 2021 in the amount of $106,406.40.

Narrative
In the past, Phoenix-Mesa Gateway Airport Authority (PMGAA) and the City of Mesa have shared expenses pertaining to lobbyist services. Mesa and the Airport will utilize the services of Patton Boggs for federal professional services, and Triadvocates, LLC for state professional services, and will share in these costs.

The Airport Authority will provide 40 percent of the total cost for the federal lobbying contract, and 33 percent of the total cost for the state lobbying contract. The dollar amounts shown below are PMGAA's portion of the total amount.

Company	Bid Amount
1. Triadvocates, LLC (State)	$32,006.40
2. Squire Patton Boggs (Federal)	$74,400

Total Contract Amount:

Total combined contract amount for FY 2022 will be $106,406.40.

Fiscal Impact
This contract was included in the FY22 operating budget and is funded under Consulting Services.

Attachment(s)
Letter of Agreement with City of Mesa.

RESOLUTION NO. 21-19

WHEREAS, the Phoenix-Mesa Gateway Airport Authority ("Authority"), a joint powers airport authority formed pursuant to Arizona Revised Statute §28-8521 *et seq.* owns and operates the Phoenix-Mesa Gateway Airport ("Airport"); and

WHEREAS the Authority desires to authorize an agreement for financial participation between the City of Mesa and Phoenix-Mesa Gateway Airport Authority to share state and federal lobbyist and consulting services effective July 1, 2021 in the amount of $106,406.40.

NOW, THEREFORE, BE IT RESOLVED by the Board of Directors of the Authority as follows:

> **The Board of Directors of the Authority hereby authorizes an agreement between the City of Mesa and Phoenix-Mesa Gateway Airport Authority to share state and federal lobbyist and consulting services effective July 1, 2021 in the amount of $106,406.40. This resolution also authorizes the Chair or Executive Director/CEO to make such additions, deletions and changes as may be approved by the Chair or Executive Director/CEO, necessary to carry out the purposes and intent of this Resolution.**

Passed and adopted by the Authority this 15th day of June, 2021.

Gail Barney, Chair

ATTEST:

Misty Johnson, Clerk of the Board

APPROVED AS TO FORM:

Jill Casson Owen, Attorney

DATE: June 9, 2021

TO: J. Brian O'Neill, Executive Director,
Phoenix-Mesa Gateway Airport Authority

FROM: Scott J. Butler, Deputy City Manager, City of Mesa SB

SUBJECT: State & Federal Legislative Representation and Consulting Services

The purpose of this memo is to confirm the proposed cost-sharing arrangement for state and federal consulting services between the City of Mesa and the Phoenix-Mesa Gateway Airport Authority.

State professional services are provided by Triadvocates, LLC. The agreement for state representation will cover the period from July 1, 2021 until June 30, 2022. Gateway's financial participation for state services will be set at 33% of the total costs. For FY2022, the cost will not exceed $32,006.40. The Triadvocates agreement is currently on its second term of its tenth contract extension.

Federal professional services are provided by Squire Patton Boggs, LLP. The agreement for federal representation will cover the period from July 1, 2021 until June 30, 2022. Gateway's financial participation for federal services will continue to be set at 40% of the total costs. For FY2022, the cost will not exceed $74,400. The Squire Patton Boggs agreement is currently on its second term of its seventh contract extension.

c: Christopher J. Brady

Acknowledgement

_____ _____

J. Brian O'Neill, Executive Director Date

Phoenix-Mesa Gateway Airport Authority
5835 S Sossaman Road
Mesa, Arizona 85212-6014
www.gatewayairport.com

Board Action Item

Re: Resolution 21-20

To: Board of Directors
From: Matt Nebgen, Gateway Aviation Services Director
Through: Scott Brownlee, Deputy Director/COO
J. Brian O'Neill, A.A.E., Executive Director/CEO
Subject: International Waste Management Services
Date: June 15, 2021

Proposed Motion
To authorize the purchase of international waste management services from Stericycle, Inc. (Stericycle) in an amount not to exceed $70,000.00 for fiscal year 2022.

Narrative
Services provided by Gateway Aviation Services include the disposal of international waste generated from arriving aircraft. This waste is regulated by the U.S. Department of Agriculture and strict laws must be followed in the disposal of such waste.

Animal and Plant Health Inspection Service (APHIS) regulated waste refers to all international waste from ocean liners, ships and planes which is not hazardous. Stericycle will collect, transport, treat and dispose of all APHIS waste and regulated garbage generated on all international flights arriving at the Phoenix-Mesa Gateway Airport. All APHIS waste collected by Stericycle is transported to a permitted facility for proper treatment by autoclaving and subsequent disposal.

Phoenix Mesa Gateway Airport Authority entered into an agreement with Stericycle on March 4, 2020 for waste disposal services under a sole source procurement as Stericycle was, and continues to be, the only vendor that provides this service in the Phoenix area. This agreement automatically renews annually unless terminated earlier by either party.

Fiscal Impact
This purchase was included in the FY22 operating budget and is funded under Cost of Goods Sold-Ramp Services in the respective amount of $70,000.00.

Attachment(s)
Stericycle, Inc. APHIS Services Agreement

RESOLUTION NO. 21-20

WHEREAS, the Phoenix-Mesa Gateway Airport Authority ("Authority"), a joint powers airport authority formed pursuant to Arizona Revised Statute §28-8521 *et seq.* owns and operates the Phoenix-Mesa Gateway Airport ("Airport"); and

WHEREAS the Authority desires to authorize the purchase of international waste management services from Stericycle, Inc. (Stericycle) in an amount not to exceed $70,000.00 for fiscal year 2022.

NOW, THEREFORE, BE IT RESOLVED by the Board of Directors of the Authority as follows:

> **The Board of Directors of the Authority hereby authorizes the purchase of international waste management services from Stericycle, Inc. (Stericycle) in an amount not to exceed $70,000.00 for fiscal year 2022. This resolution also authorizes the Chair or Executive Director/CEO to make such additions, deletions, and changes as may be approved by the Chair or Executive Director/CEO, necessary to carry out the purposes and intent of this Resolution.**

Passed and adopted by the Authority this 15th day of June, 2021.

Gail Barney, Chair

ATTEST:

Misty Johnson, Clerk of the Board

APPROVED AS TO FORM:

Jill Casson Owen, Attorney

2020-027

Stericycle
Protecting People. Reducing Risk.

Account # 6051589
Reason Code Renewal

STERICYCLE, INC. APHIS SERVICES AGREEMENT

Billing Name and Address		Service Name and Address	
Name:	Phoenix Mesa Gateway Airport	Name:	
Address:	5835 S. Sossaman Rd.	Address:	
City/State/Zip:	Mesa, Az 85212	City/State/Zip:	
Phone:	480-988-7619 Fax: 480-988-2315	Phone:	
Contact:	Accounts Payable ap@gatewayairport.com	Contact:	

Rate Structure: **$225.00 stop fee + $79.00 per container for processing of USDA/APHIS waste**

M,W,F service. If service is cancelled 24 hrs in advance, no stop fee to be applied

Pricing to remain firm for 24 months

Date of Service Agreement:

Please initial to confirm agreement with CBP/USDA MPN **(customer's initials)**

By signing in the space provided above, the Customer confirms that they (a) have appropriately entered into a valid agreement with the Customs and Border Protection / U.S. Department of Agriculture, (b) understand the APHIS waste protocol therein and (c) are bound by the terms and conditions therein.

Stericycle, Inc.		Customer	
Signature:	Digitally signed by Jeff Heilig DN: cn=Jeff Heilig, o=Stericycle, ou=Marlboro, email=jheilig@stericycle.com, c=US Date: 2020.01.26 09:41:28 -07'00'	Signature:	
Name Printed:	Jeff Heilig	Name Printed:	J. Brian O'Neill
Title:		Title:	Executive Director
Date:		Date:	3/4/2020

10. Excuse of Performance SRCL shall not be responsible if its performance of this Agreement is interrupted or delayed by contingencies beyond its control, including, without limitation, acts of God, war, blockades, riots, explosion, strikes, lockouts or other labor or industrial disturbances, fires, accidents to equipment, injunctions or compliance with laws, regulations, guidelines or orders of any governmental body or instrumentality thereof (whether now existing or hereafter created).

11. Independent Contractor SRCL's relationship with Customer pursuant hereto is that of an independent contractor, and nothing in this Agreement shall be construed to designate SRCL as an employee, agent or partner of or a joint venture with Customer.

12. Amendment and Waiver Changes in the types, size and amount of equipment and the frequency of service may be mutually agreed to orally or in writing by the parties, without affecting the validity of this Agreement. Consent to oral changes shall be evidenced by the practices and actions of the parties. All other amendments to this Agreement (other than as provided in 2(b)) shall be effected only by a written instrument executed by the parties. No waiver shall be effective unless submitted in writing by the party granting such waiver. No waiver of any provision of this Agreement shall be deemed a waiver of any other provision of this Agreement and no waiver of any breach or duty under this Agreement shall be deemed a waiver of any other breach or later instances of the same duty.

13. Savings Clause In case any one or more of the provisions contained in this Agreement shall, for any reason, be held to be invalid, illegal or unenforceable in any respect, such invalidity, illegality or unenforceability shall not effect any other provisions of this Agreement; this Agreement shall be construed as if such invalid, illegal or unenforceable provision had never been contained herein, unless such finding shall impair the rights or increase the obligations of SRCL hereunder, in which event, at SRCL's option, this Agreement may be terminated.

14. Entire Agreement This Agreement (including any attachments, exhibits and amendments made in accordance with Paragraph 11) constitutes the entire understanding and agreement of the parties and cancels and supersedes all prior negotiations, representations, understandings or agreements, whether written or oral, with respect to the subject matter of this Agreement.

15. Governing Law This Agreement shall be governed by and construed in accordance with the laws of the State of Illinois without regard to the conflicts of laws rules of any jurisdiction.

16. Notices All required notices, or those which the parties may desire to give under this Agreement shall be in writing and sent to the parties' addresses set forth on the reverse side of this Agreement.

17. Counterparts This Agreement may be executed in one or more counterparts, each of which shall be deemed an original but all of which when taken together shall constitute one and the same instrument. A copy or facsimile of this Agreement shall be as effective as an original.

18. Waste Brokers SRCL reserves the right to deal solely with the Customer and not with any third party agents of the customer for all purposes relating to this Agreement. Customer represents and warrants to SRCL that it is the regulated waste generator and is acting for its own account and not through a broker or agent. SRCL shall be entitled to terminate this agreement and seek all available legal remedies, including but not limited to liquated damages, in the amount set forth herein for Customer's breach of this representation and warranty.

Stericycle USDA/APHIS Waste Acceptance Protocol
Appendix A

The information contained within this Stericycle Protocol reflects the requirements necessary to comply with U.S. Department of Transportation (DOT) *Hazardous Materials Regulated USDA/APHIS Waste* regulations, and all other applicable laws and regulations governing USDA/APHIS waste for generators, transporters, and/or treatment facilities in the State of Arizona.

STERICYCLE CONFIDENTIAL INFORMATION FOR CUSTOMERS

This document is provided for your education and notification of procedures required to assure compliance with applicable regulations.

This document shall not be reproduced, copied, loaned, or transferred to another person directly or indirectly, in whole or in part, nor used for any purpose other than that for which it is specifically furnished, without the prior written consent of Stericycle.

1. WASTE ACCEPTED BY STERICYCLE
   - 1.1. International waste from ocean liners, ships, and planes which is not otherwise hazardous. This waste is regulated by the U.S. Department of Agriculture (USDA).
   - 1.2. Medical Records and Confidential Documents

2. NON-CONFORMING WASTES WHICH ARE NOT ACCEPTED BY Stericycle
   - 2.1. Radioactive Waste: UNDER NO CIRCUMSTANCES, will Stericycle accept any waste emitting radiation in levels greater than regulatory limits as defined in the Arizona DHS *Policy Guidance for Handling Medical Waste at Off-Site Treatment Facilities*. Prior to treatment, all containers will be inspected by means of a radiation monitor. Any container above regulatory limits will be rejected for treatment, and arrangements will be made for return to the generating facility. This procedure may be result in added service charges.
   - 2.2. Hazardous Waste, including, but not limited to:
     - 2.2.1 Solvents, paints, paint thinner
     - 2.2.2 Drums or other containers with hazard warning sign
     - 2.2.3 Batteries of any kind
     - 2.2.4 Glass thermometers, sphygmomanometers, florescent light tubes, or other equipment or devices containing mercury such as bougie dilators and GI tubes with mercury pouches.
     - 2. 2.5 Chemicals such as formaldehyde/formalin, ova-parasite fixative, acids, alcohol, acetone, waste oil, items preserved in thimerosal in concentrations exceeding 0.002%, and mercury-containing reagents.
     - 2.2.6 Bulk chemotherapy waste (antineoplastic/cytotoxic drugs) or other RCRA listed hazardous pharmaceuticals. Full or partially full IV bottles/bags and vials of chemotherapy agents constitute hazardous waste and must be managed accordingly. Stericycle will not accept any outdated or unused chemotherapy drugs. It is recommended that such agents be returned to the pharmaceutical company.
     - 2.2.7 Any item listed as being hazardous in federal, state, or local regulations.
     - 2.2.8. In order to comply with state and federal regulations, all hazardous waste must be managed by a licensed hazardous waste contractor. Stericycle does not provide service for hazardous waste disposal. Each facility should contact their state or local regulatory agency for hazardous waste regulations and information.
   - 2.3 Compressed Gas Cylinders, Canisters, Inhalers, and Aerosol Cans
   - 2.4 Human Remains

     Stericycle requires that human remains, fetuses, and cadavers (intact and otherwise) are segregated from the waste stream. Stericycle will not accept these materials.

3.0 SEGREGATION AND PACKAGING OF WASTE
   - 3.1 International Waste: Shipboard and airline waste must be secured in trash bags and placed into leak-resistant Stericycle containers prior to transport as directed by local port authority Compliance Agreement with Stericycle, Inc. All containers must be labeled "FOREIGN GARBAGE" to ensure the waste is processed as required by steam autoclave.
   - 3.2 Medical Records and Confidential Documents

     Confidential documents and medical records must be contained in sturdy, well-secured taped cardboard boxes or reusable containers prior to collection for shredding/destruction and identified as such. Containers are available upon request.

4.0 LABELING AND MARKING OF USDA/APHIS WASTE BAGS AND CONTAINERS

4.1 Non-conforming Labels and Markings Any container which bears a label with the words or symbols reflecting "HAZARDOUS CHEMICALS", "HAZARDOUS DRUGS", "HAZARDOUS WASTE", "RADIOACTIVE MATERIAL", or "RADIOACTIVE WASTE" cannot be transported, accepted, or treated by Stericycle, no matter what the contents.

5.0 TRANSPORTATION OF WASTE

5.1 Registered Vehicles

5.1.1 Stericycle maintains a Hazardous Waste Hauler's Registration for transportation of all waste collected and/or transferred and/or treated in Arizona as required.

5.2 Responsibility and Authority of Stericycle Drivers

5.2.1 Stericycle drivers are responsible for the collection and tracking of all waste containers generated on their assigned routes on any given day. They are responsible for monitoring the proper containment, closure, and labeling of each tub, box, drum, or sharps container prior to scanning/entering the specific data into the Stericycle BIOTRACK® system It is also the responsibility of the driver to leave a copy of the signed tracking document(s).

5.2.2 Stericycle drivers are authorized to reject any containers that do not meet DOT specifications. Odor, leakage, bulging or damaged containers, improper packaging, incorrect labels, non-conforming waste, and improper segregation are some of the causes for rejection of USDA/APHIS waste containers.

5.2.3 Containers may be subject to an off-specification charge for repackaging and special handling, if such is required.

5.3 Emergency Spill Response

5.3.1 Stericycle Hazardous Waste Registered vehicles are equipped with emergency spill kits, and drivers are trained in emergency response spill procedures as required by Arizona and U.S. DOT regulations. Written Emergency Response Spill and Hazardous Materials Procedures are available in the cab of each vehicle.

5.3.2 Stericycle provides and maintains an Emergency Spill Response Telephone Number 24 hours a day at (800)234-0051.

5.4 All policies and practices for transportation of USDA/APHIS waste provided by Stericycle are in full compliance with applicable U.S. DOT, Arizona, and local laws and regulations.

6.0 TREATMENT OF WASTE

6.1 Permitted Waste Treatment Facilities

All APHIS waste collected by Stericycle is transported to a permitted facility for proper treatment by autoclaving and subsequent disposal.

6.2 Waste Treatment Methods/Parameters

6.2.1 International waste is subjected to steam autoclave processing per Compliance Agreement with the local port authority or U.S. Dept. of Agriculture.

6.3 Waste treatment facilities operate in compliance with all applicable federal, state, and local laws/regulations and maintain all required permits and licenses.

Phoenix-Mesa Gateway Airport Authority
5835 S Sossaman Road
Mesa, Arizona 85212-6014
www.gatewayairport.com

Board Action Item

Re: Resolution 21-21

To:	**Board of Directors**
From:	**Matt Nebgen, Gateway Aviation Services Director**
Through:	**Scott Brownlee, Deputy Director/COO**
	J. Brian O'Neill, A.A.E., Executive Director/CEO
Subject:	**FY22 Purchase of Unleaded and Diesel Fuel - State Contract Vendors**
Date:	**June 15, 2021**

Proposed Motion
To authorize the purchase of Unleaded and Diesel fuel from the lowest priced State contract vendor at market prices for Airport Authority use and resale in an amount not to exceed $328,468 to provide fuel for the 2022 fiscal year.

Narrative
The Phoenix-Mesa Gateway Airport Authority (PMGAA) owns and operates Gateway Aviation Services, the airport's sole provider of fuel for ground support equipment.

Unleaded and Diesel are needed to provide fuel to tenant and airport ground support equipment.

As a qualified participant of the Arizona Department of Administration State Procurement Office (ADSPO), PMGAA can procure goods and services under state contracts. These contracts have been competitively bid and are available upon request.

Fiscal Impact
This purchase was included in the FY22 budget and is funded under Cost of Goods Sold and Fuel Usage for internal use.

Attachment(s)
N/A

RESOLUTION NO. 21-21

WHEREAS, the Phoenix-Mesa Gateway Airport Authority ("Authority"), a joint powers airport authority formed pursuant to Arizona Revised Statute §28-8521 *et seq.* owns and operates the Phoenix-Mesa Gateway Airport ("Airport"); and

WHEREAS the Authority desires to authorize the purchase of Unleaded and Diesel fuel from the lowest priced State contract vendor at market prices for Airport Authority use and resale in an amount not to exceed $328,468 to provide fuel for the 2022 fiscal year.

NOW, THEREFORE, BE IT RESOLVED by the Board of Directors of the Authority as follows:

> **The Board of Directors of the Authority hereby authorizes the purchase of Unleaded and Diesel fuel from the lowest priced State contract vendor at market prices for Airport Authority use and resale in an amount not to exceed $328,468 to provide fuel for the 2022 fiscal year. This resolution also authorizes the Chair or Executive Director/CEO to make such additions, deletions, and changes as may be approved by the Chair or Executive Director/CEO, necessary to carry out the purposes and intent of this Resolution.**

Passed and adopted by the Authority this 15th day of June, 2021.

Gail Barney, Chair

ATTEST:

Misty Johnson, Clerk of the Board

APPROVED AS TO FORM:

Jill Casson Owen, Attorney

Phoenix-Mesa Gateway Airport Authority
5835 S Sossaman Road
Mesa, Arizona 85212-6014
www.gatewayairport.com

Board Action Item

Re: Resolution 21-22

To:	**Board of Directors**
From:	**R. J. Draper, P.E., LEED AP, CM Engineering & Facilities Director**
Through:	**Scott Brownlee, Deputy Director/COO**
	J. Brian O'Neill, A.A.E., Executive Director/CEO
Subject:	**Alpha Apron Expansion Phase IV Design – Kimley Horn & Associates**
Date:	**June 15, 2021**

Proposed Motion
To approve an Authorization of Services for Alpha Apron Expansion Phase IV Design Engineering Services with Kimley-Horn & Associates in an amount not to exceed $294,828.55 under CIP 1231.

Narrative
In FY2004 PMGAA completed a 250,000 square foot aircraft parking apron, which resulted in a private development along its edge. An expansion to that apron (Phase II) was constructed in FY2011 and is used for various federal government operations. In order to ensure we have adequate apron capacity for the future, the Alpha Apron Expansion Phase III Design was refreshed in 2020 and is currently awaiting Bids for construction in 2021. As demand for additional apron space continues to grow, the Airport is ready to move forward with the Design of the fourth phase of the Alpha Apron design and construction.

The project will expand the Alpha Apron Phase III pavement an additional 27,300 square yards to the northwest, and will include the construction of a new connector taxiway that will provide access from the existing Taxiway V to the north side of the Phase IV apron area. This project will include a Portland cement concrete pavement section, asphalt paved shoulders, taxiway/apron lighting and signage, pavement markings, utility improvements, and will be constructed in phases. The project administration provides support, planning, budgeting, scheduling, progress reports, and meetings throughout the project. The Engineer will also provide an Engineer's Design Report, preparation of preliminary/final contract bid documents, and bid phase services.

In 2019, a Request for Qualifications, 2020-007-RFQ for On-Call Engineering Services was issued. Kimley-Horn and Associates (KHA) was one of two firms selected as the most qualified. In accordance with the terms of our agreement, C-2020007-A, KHA worked with Airport staff to refine a Scope of Work for Engineering Design Services for the Alpha Apron Expansion Phase IV Design. The cost for these services was negotiated based upon the contract fee schedule at a cost not-to-exceed $294,828.55.

Fiscal Impact
This project is authorized in the FY21 capital budget. The Engineering Design Services will be funded with PMGAA Non-grant funding and with future reimbursement from PFC funding under CIP 1231.

Attachment(s)
AOS, Proposal

RESOLUTION NO. 21-22

WHEREAS, the Phoenix-Mesa Gateway Airport Authority ("Authority"), a joint powers airport authority formed pursuant to Arizona Revised Statute §28-8521 *et seq.* owns and operates the Phoenix-Mesa Gateway Airport ("Airport"); and

WHEREAS the Authority desires to approve an Authorization of Services for Alpha Apron Expansion Phase IV Design Engineering Services with Kimley-Horn & Associates in an amount not to exceed $294,828.55 under CIP 1231.

NOW, THEREFORE, BE IT RESOLVED by the Board of Directors of the Authority as follows:

> **The Board of Directors of the Authority hereby approves an Authorization of Services for Alpha Apron Expansion Phase IV Design Engineering Services with Kimley-Horn & Associates in an amount not to exceed $294,828.55 under CIP 1231. This resolution also authorizes the Chair or Executive Director/CEO to make such additions, deletions and changes as may be approved by the Chair or Executive Director/CEO, necessary to carry out the purposes and intent of this Resolution.**

Passed and adopted by the Authority this 15th day of June, 2021.

Gail Barney, Chair

ATTEST:

Misty Johnson, Clerk of the Board

APPROVED AS TO FORM:

Jill Casson Owen, Attorney

AUTHORIZATION OF SERVICES
Kimley-Horn & Associates, AOS 20A-2104

The signing of this Authorization (Agreement) by Phoenix-Mesa Gateway Airport Authority (PMGAA) and Kimley-Horn & Associates, 7740 N. 16th Street, Suite 300, Phoenix, AZ 85020 ("Kimley-Horn"), authorizes Kimley-Horn to carry-out and complete the services described below in consideration of the mutual covenants set forth below:

1. **PROJECT**: Alpha Apron Expansion Phase IV Design - CIP 1231.

2. **SCOPE OF WORK**: Perform and provide Engineering Design Services related to expanding the existing Alpha Apron by 27,300 square yards to the northwest. All services are to be performed in accordance with PMGAA Agreement C-2020-007-A, including the Standard Terms, and the attached detailed Scope of Work. Services shall be coordinated with and approved by PMGAA Authorized Representative prior to start of work.

3. **FEE FOR SERVICES**: The fee for services shall be based upon the attached Scope of Work, not-to-exceed Two hundred ninety-four thousand, eight hundred twenty-eight dollars and fifty-five cents ($294,828.55), of PMGAA non-grant funds without the express written approval of PMGAA.

4. **AVAILABILITY OF PROJECT FUNDING:** The approval and continuation of this contract is subject to the availability of funds provided to, made available to, or appropriated by PMGAA for this purpose. In the event that funds are not available or appropriated for PMGAA's payment requirements under this contract for the goods and/or services to be provided hereunder, PMGAA may terminate this contract by providing notice to the consultant of the lack of the availability of funds. The consultant acknowledges and agrees that one source of funding for this contract may be funds made available from the Federal Aviation Administration and/or Arizona Department of Transportation, and that this contract, its approval and continuation, may contingent on the availability of those funds being made to PMGAA.

5. **INCORPORATED:** The following documents are hereby incorporated with this Authorization of Services and made part thereof:

   ☑ PMGAA Agreement C-2020007-A dated December 17, 2019.

6. **ATTACHED:** The following documents are attached to this Agreement and are incorporated herein by this reference made part thereof:

   ☑ Scope and Fee Proposal dated May 2021.

PMGAA and Kimley-Horn acknowledge that they are in agreement with the terms and conditions as set forth in this Authorization.

APPROVED FOR PMGAA:

By:_____

Print: J. Brian O'Neill, A.A.E.

Title: Executive Director/CEO

Date:_____

ACCEPTED FOR Kimley-Horn & Associates:

By: _____

Print: Steve Reeder, P.E.

Title: Senior PM/Vice President

Date: 05/27/2021

EXHIBIT A

SCOPE OF WORK
ENGINEERING DESIGN SERVICES
for
Alpha Apron Expansion Phase IV - Design

A. PROJECT BACKGROUND AND HISTORY:

Over the last couple decades, the demand for aircraft-parking/hangar-buildings at the Phoenix-Mesa Gateway Airport (the Airport) created the need for additional apron areas to be constructed on the southwest side of the airfield. The "*Cargo Apron and Taxiway B*" project built the first phase of the current Alpha Apron area, followed by a second project which extended the apron to the south (referred to as the "*Alpha Apron Phase II*" project). Later, in 2011 Kimley-Horn was tasked with the design of a third phase of construction (referred to as the "*Alpha Apron Expansion Phase III*" project), but upon completion of design plans, the Phase III project was put on hold (prior to going out to bid) due to lack of project funding. In 2020 the Phase III project was re-evaluated, and Kimley-Horn brought the previous design up to current design standards, and the project is currently awaiting Bids, for construction in late 2021. As the demand for additional apron space continues to grow, the Airport has tasked Kimley-Horn with the design of a fourth phase of apron construction, this project will be referred to as "*Alpha Apron Expansion Phase IV*".

The project will expand the yet to be constructed "*Alpha Apron Phase III*" pavement an additional ~27,300 square yards to the northwest, and will also include the construction of a new connector taxiway that will provide access from existing Taxiway V to the north side of the Phase IV apron area. Similar to Phase III, this project will include a Portland cement concrete pavement section, asphalt paved shoulders in select areas, taxiway/apron lighting and signage, pavement markings, utility improvements, and is anticipated to be constructed in phases.

In addition to the items listed above, Phase IV will also include typical project challenges:

- The geometry of the proposed apron area in combination with the new taxiway geometries will require extensive joint layout configuration, pavement/infield grading, and a potentially revised drainage network.
- The new connecting taxiway will impact the existing drainage flowline along the southern edge of Taxiway V, and due to the shallow infield grading, and shallow invert of the existing flared end section at the drainage outfall, alternatives to pipe crossings underneath the new taxiway will need to be evaluated.
- The existing vehicle service road (VSR) will require grade/profile adjustments for a segment of the road where it intersects the new taxiway (to meet both taxiway and VSR grade/profile requirements). Additionally, the VSR will require alignment reconfiguration where it will cross into the proposed island (adjacent to the Taxiway V and Taxiway A intersection) and turns south towards the existing alpha apron.
- One of the challenges associated with this project will be conveying the increased flow volumes from the project area offsite. Upon completion of this project the existing project site will be converted from mostly pervious milling areas to largely impervious pavements areas, and the existing storm drain network appears to be undersized upon preliminary review to accommodate the possible additional flow volumes. An analysis of the flow volumes will determine to what extent the existing system is capable of accommodating, or if alternative designs that may include detention basin(s) or other alternatives may be necessary.

B. PROJECT DESCRIPTION:

This project will consist of the design of the apron composed of a Portland cement concrete pavement section, asphalt paved shoulders in select areas, taxiway/apron lighting and signage, pavement markings, utility fire line extension, construction phases, the analysis of the existing drainage system, up to two (2) preliminary alternative drainage designs, and one (1) final drainage design to be included in the final Issued For Bid set. The preliminary/schematic geometry of the proposed Alpha Apron Expansion Phase IV project is shown in the Figure **below**.

Design services will be comprised of the preparation of an Engineer's Design Report, preparation of preliminary/final-review/issued-for-bid contract bid documents, and bid phase services. The project is anticipated to be bid in Winter of 2021 using PMGAA (PFC) funding. Construction Administration services may added to this project at a later date.

Preliminary Project Layout

C. PROJECT SCOPE:

The specific scope of work for this Authorization of Service is identified as follows:

1. **PROJECT ADMINISTRATION:** The following general tasks are anticipated to be needed for the project.
   a) Provide project administrative tasks for support throughout the project.
   b) Provide project planning, budgeting, and initial project schedule.
   c) Provide bi-weekly progress reports, meetings and notes of project meetings.
   d) Attend (up to two) coordination and plan review meetings.

2. **PRELIMINARY SUBMITTAL (60%):** Kimley-Horn (the Engineer) will produce a draft Engineer's Design Report and Preliminary Plans (60%) of the project. The Engineer's Design Report will include a description of design methodology and other design concepts, criteria and standards used. Reference will be made to appropriate FAA design circulars, specifications and applicable federal and state

regulations. Design standards will be according to FAA Advisory Circular 150/5300-13A (Change 1) "Airport Design", other applicable circulars, and Maricopa Association of Governments (MAG) standards. A draft Construction Safety Plan and appropriate air study submittals will be made as required by the FAA for typical construction projects.

Information created and determined during this effort will be used to prepare the construction plans and specifications. Information from the E-ALP/GIS project will be used as a base and to augment the survey and utility files for use on the project. As part of this task, topographic survey, utility designation and geotechnical work will be completed.

These efforts will be done so that preliminary plans (60%) can be prepared. A limited number of preliminary plan sheets (project layout, preliminary typical section, geometrics layout and preliminary electrical layout), an outline of intended specifications, and preliminary cost estimate will be provided to display the project elements. A facilitated review meeting will be held with PMGAA, and with the FAA and Arizona Department of Transportation (ADOT) if required, after the Preliminary submittal and comments will be incorporated into the next submittal.

3. **FINAL REVIEW SUBMITTAL (95%):** The Engineer will provide design and contract construction documents for the apron and taxiway improvements. The Engineer will provide engineering drawings and specifications to be used as contract documents. Plan sheets will include: cover sheet, sheet index, summary of quantities, general notes and abbreviations, project layout, construction phasing, demolition, typical section/details, geometric layout, plan and profiles, pavement elevations, grading & drainage, storm drain profiles/details, joint layout/details, pavement markings plan/details, stormwater pollution prevention plan, electrical, and details will be prepared for the project. The Engineer will assemble owner provided front end documents, a project quantity based bid proposal, FAA general provisions, special provisions (unique project requirements), and technical specifications to be used as project contract documents for the bidding process. The Engineer's Design Report will include a description of design methodology and other design concepts, criteria and standards used. Reference will be made to appropriate FAA design circulars, specifications and applicable federal and state regulations. Design standards will be according to FAA Advisory Circular 150/5300-13A (Change 1) "Airport Design", other applicable circulars, and Maricopa Association of Governments (MAG) standards. A draft Construction Safety Plan and appropriate air study submittals will be made as required by the FAA for typical construction projects.

   Information from the E-ALP/GIS project will be used as a base and to augment the survey and utility files for use on the project.

   Plans, specifications, engineer's design report and construction safety/phasing plan will be prepared for Final Review submittal. A facilitated review meeting will be held with PMGAA, and with the FAA and ADOT if required, after the Final Review submittal and comments will be incorporated into the next submittal.

4. **ISSUED FOR BID SUBMITTAL (IFB):** The Engineer will provide Issued For Bid Plans, Specifications, Cost Estimate, and Construction Documents for the Alpha Apron Expansion Phase IV project.

   Construction Costs: An Engineer's Opinion of Probable Construction Costs will be provided for the project and will be based on cost history for past work within the vicinity of the airfield and for projects of a similar nature. The opinion of probable cost will reflect construction during a regular construction schedule.

5. **PRE-BID ASSISTANCE SERVICES:** The Engineer will provide bidding assistance, issue contract documents to reprographics company for distribution, attend pre-bid conference, answer contractor questions, prepare addendum, tabulate bids, prepare bid summary spreadsheet, and submit to PMGAA written recommendation of award.

D. DELIVERABLES: The following deliverables will be provided according to this contract:

(1) Preliminary Plans and Specifications (Preliminary Submittal) four (4) copies to PMGAA (and one (1) copy to the FAA and ADOT review if required).
(2) Engineer's Design Report – four copies to PMGAA.
(3) Final Review Plans and Specifications (Final Review Submittal) four (4) copies to PMGAA (and one (1) copy to the FAA and ADOT review if required).
(4) Construction Safety Plan/Phasing Plan – copy with each submittal.
(5) Opinion of probable construction costs – copy with each submittal.
(6) Issued For Bid Plans and Specifications (IFB Submittal) four (4) copies to PMGAA. The Airport will provide copies of the plans to contractors for bidding purposes.
(7) Electronic drawing files to PMGAA.

E. OWNER'S RESPONSIBILITIES: PMGAA will furnish specification front end documents including, DBE, legal, bonding and other provisions as required for the contract documents. The Engineer will assemble this information into the contract documents for the bidding process. The information will be due from PMGAA at time of service authorization. PMGAA will review the plan submittals in a timely fashion and provide written comments of the desired changes to the contract documents. PMGAA will provide all archeological and environmental clearances for the project.

F. WORK SCHEDULE: Work is to be completed within seven (7) months from the authorization of service date. Draft Schedule as attached.

G. CONSULTANT'S COMPENSATION FOR SERVICES: Kimley-Horn shall be compensated for services using a labor fee plus expense basis with the maximum not to exceed fee shown below. Kimley-Horn will not exceed the total maximum fee shown without authorization from the Client. Individual task amounts are provided for budgeting purposes only. Kimley-Horn reserves the right to reallocate amounts among tasks as necessary.

Design Services - $ 294,828.55

The derivation of engineering fee for design services are attached to this authorization as Exhibits.

Alpha Apron Expansion Phase IV
Phoenix-Mesa Gateway Airport
Phoenix-Mesa Gateway Airport Authority

DATE: May 2021

EXHIBIT I - DESIGN DOCUMENTS - ENGINEERING FEE
Alpha Apron Expansion Phase IV

DERIVATION OF COST OF PROPOSAL FEE

1. DIRECT LABOR

TASK	DESCRIPTION	MANHOURS	TOTAL	EXTENDED TOTAL
001	**Project Administration**	82	4,181.40	
002	**Preliminary Submittal (60%)**			
	Construction Drawings	881	40,189.50	
	Quantities & Cost Estimate	34	1,616.60	
	Engineering Design Report	141	6,402.10	
	Project Specifications	114	5,839.70	
003	**Final Review Submittal (95%)**			
	Construction Drawings	299	14,083.75	
	Quantities & Cost Estimate	18	876.90	
	Engineering Design Report	45	2,136.80	
	Project Specifications	60	3,207.00	
004	**Issued For Bid Submittal (IFB)**	164	7,630.40	
005	**Bid Phase Services**	20	1,146.40	
	TOTAL DIRECT LABOR	1,858		$87,310.55

2. EXPENSES:

EXPENSE (Printing/Travel)		2,860.00	
TOTAL EXPENSES:			$2,860.00

3. CONSULTANTS:

TRACE ENGINEERING - SURVEY - ESTIMATED		8,500.00	
UNDERGROUND LOCATION - ALLOWANCE		1,500.00	
TOTAL CONSULTANTS			$10,000.00

4. ENGINEERING FEE

TOTAL LABOR		87,310.55	
OVERHEAD (%)	193.59%	169,024.49	
FEE (% OF NET)	10%	25,633.50	
CONSULTANTS		10,000.00	
EXPENSES		2,860.00	
TOTAL ENGINEERING FEE			**$294,828.55**

Alpha Apron Expansion Phase IV
Phoenix-Mesa Gateway Airport
Phoenix-Mesa Gateway Airport Authority

DATE: May 2021

EXHIBIT II - DESIGN DOCUMENTS - ENGINEERING FEE
Alpha Apron Expansion Phase IV

DERIVATION OF COST OF PROPOSAL FEE

1. Direct Salary Costs

Title	HOURS	Rate	Total Labor	EXTENDED TOTAL
Senior Project Manager (Steve Reeder)	147	68.60	10,084.20	
Principal Engineer (Mike Norby)	2	81.50	163.00	
Electrical/Comm Engineer (Dustin Colwell)	187	59.20	11,070.40	
Professional Engineer (Jarrett Moore/Brandon Robinson/Zach Schmidt)	780	49.80	38,844.00	
Analyst (Hasan Kanaan/Robert Walker/Bradley Dawson)	507	37.15	18,835.05	
Senior Analyst/Designer (Dave Hodgson)	94	43.20	4,060.80	
Graphic Designer (Pat Crawford)	107	31.30	3,349.10	
Finance/Project Accountant (Andrew Hacker)	8	37.60	300.80	
Admin/Clerical (Jessica Jensen)	26	23.20	603.20	
Total Direct Salary Costs	1,858			**$87,310.55**

2. Labor and General & Administrative Overhead

Percentage of Direct Salary Costs By 193.59% **$169,024.49**

3. Subtotal of Items 1 and 2 **$256,335.04**

4. Fixed Payment

10% of Item No. 3: **$25,633.50**

5. Non-Salary Expenses

EXPENSE (Printing/Travel)	2,860.00	
Total Direct Non-Salary Expenses		**$2,860.00**

6. Subcontract Costs

TRACE ENGINEERING - SURVEY - ESTIMATED	8,500.00	
UNDERGROUND LOCATION - ALLOWANCE	1,500.00	
Subtotal of subcontract Costs		**$10,000.00**

7. TOTAL ENGINEERING FEE **$294,828.55**

Alpha Apron Expansion Phase IV
Phoenix-Mesa Gateway Airport
Phoenix-Mesa Gateway Airport Authority

Kimley»Horn

Alpha Apron Expansion Phase IV

DATE: May 2021

			Senior Project Mgr.	Principal Engineer	Electrical/ Comm. Engineer	Prof. Engineer	Analyst	Senior Analyst Designer	Graphic Designer	Finance/ Project Accountant	Admin/ Clerical	TOTAL MAN-HRS	TOTAL LABOR COST
001	**Project Administration**												
1	Project Administration-Client Coordination, Subconsultant Coordination, Supervision		4	2		8					4	18	$929
2	Project Planning, Budgeting, and Initial Project Schedule, Billing		4			8				8		20	974
3	Progress Reports, Bi-Weekly Meetings, Note preparation and Schedule Updates		6			14					4	24	1,202
4	Company Quality Control Review												
	- Review Meeting after Preliminary (60%) Submittal		4		2	2					2	10	$539
	- Review Meeting after Final Review (95%) Submittals		4		2	2					2	10	$539
	Subtotal Task 001		22	2	4	34				8	12	82	$4,181
002	**Preliminary Submittal (60%)**												
	Construction Drawings	Sheets											
1	Cover Sheet, Project Title Sheet	1				2	6		6			14	$510
2	Index, Legend, Quantities, General Notes	3				4	4		10			18	$661
3	Project Layout and Horz/Vert Control	2				6	12		6			24	$932
4	Fence Plan and Details	2				8	6		4			18	$747
5	Storm Water Pollution Prevention Plan and Details	2	1			12	8		8			29	$1,214
6	Project Site and Access Plan	1	1			4	6		5			16	$647
7	Demolition Plans	3	1			24	12		8			45	$1,960
8	Construction Phasing Plans	3	1			24	4		8			37	$1,663
9	Typical Sections and Details	2	1			24	8					33	$1,561
10	Geometric Layout Plans	3	1			36	8	6				51	$2,418
11	Grading and Drainage Plans	3	2			80	8	12				102	$4,937
12	Storm Drain Profile and Detail Plans	6	1			32	4	20				57	$2,675
13	Paving Plans	3	1			4	8	6				19	$824
14	New Taxiway Plan and Profile	1	1			24	4	8				37	$1,758
15	Pavement Joint Layout Plans	3	1			18	12					31	$1,411
16	Pavement Joint Details	1				6	4		2			12	$510
17	Pavement Marking Plans	3	1			18	12		2			33	$1,473
18	Pavement Marking Details	1				4	12		2			18	$708
19	Water Line Plan and Details	2	1			18	18					37	$1,634
20	Water Line Profile	1	1			18	8	12	2			41	$1,843
21	Electrical Symbols, Data Table - Diagram	1			8		8					16	$771
22	Electrical Lighting Layout/Circuiting	3	2		40		48		8			98	$4,539
23	Electrical Details	5			12		20					32	$1,453
24	Circuit Maps	4			24		24					48	$2,312
25	Technical Supervision and Review		15									15	$1,029
	Subtotal	59	32		84	366	264	64	71			881	$40,190
	Quantities & Cost Estimate												
1	Calculate Quantities					8	8					16	$696
2	Cost Estimate												
	- Update Final Review (60%) Cost Estimates				4	8	4					16	$784
3	Technical Supervision and Review		2									2	$137
	Subtotal		2		4	16	12					34	$1,617
	Engineering Design Report												
1	Engineer's Report (60%)												
	- Document with summary and recommendations for civil project layout, pavement design electrical layout, sign plan and voltage calculations, drainage design, exhibits and hydraulic calculations		1		6	60	18		4			89	$4,206
2	Construction Safety Phasing Plan Report (60%)		2			6	40					48	$1,922
3	Technical Supervision and Review		4									4	$274
	Subtotal		7		6	66	58		4			141	$6,402
	Project Specifications												
1	Project Specification-General												
	- Create Cover and Table of Contents					2	2					4	$174
	- Prepare Boiler Plate including FAA Compliance					12	4					16	$746
	- Prepare Bid Tab and Agreement												
	- Add Geo-Technical Report & FAA Circulars												
2	Specification - Special Provisions		4			24					4	32	$1,562
	- Prepare Special Conditions for Project												
3	Technical Specification												
	- Prepare Technical specifications- Earthwork, Subgrade, Pavement, Marking,		4			32					4	40	$1,961
	Electrical		2		12							14	$848
4	Technical Supervision and Review		8									8	$549
	Subtotal		18		12	70	6				8	114	$5,840
	Subtotal Task 002		59		106	518	340	64	75		8	1,170	54,048

Alpha Apron Expansion Phase IV
Phoenix-Mesa Gateway Airport
Phoenix-Mesa Gateway Airport Authority

Alpha Apron Expansion Phase IV

DATE: May 2021

003 Final Review Submittal (95%)

Construction Drawings

		Sheets	Senior Project Mgr.	Principal Engineer	Electrical/ Comm. Engineer	Prof. Engineer	Analyst	Senior Analyst Designer	Graphic Designer	Finance/ Project Accountant	Admin/ Clerical	TOTAL MAN-HRS	TOTAL LABOR COST
1	Cover Sheet, Project Title Sheet	1				1	1					2	$87
2	Index, Legend, Quantities, General Notes	3				1	2					3	$124
3	Project Layout and Horz/Vert Control	2				2	2		2			6	$237
4	Fence Plan and Details	2				4	4					8	$348
5	Storm Water Pollution Prevention Plan and Details	2				2	4					6	$248
6	Project Site and Access Plan	1				1			2			3	$112
7	Demolition Plans	3	1			4			2			7	$330
8	Construction Phasing Plans	3	1			6	6					13	$590
9	Typical Sections and Details	2				4	6					10	$422
10	Geometric Layout Plans	3	1			10	2	2				15	$727
11	Grading and Drainage Plans	3	1			24	4	8				37	$1,758
12	Storm Drain Profile and Detail Plans	6	1			12		8				21	$1,012
13	Paving Plans	3				2	4					6	$248
14	New Taxiway Plan and Profile	1	1			6	2	4				13	$615
15	Pavement Joint Layout Plans	3	1			2	4					7	$317
16	Pavement Joint Details	1				2			1			3	$131
17	Pavement Marking Plans	3	1			2	6		2			11	$454
18	Pavement Marking Details	1				1			1			2	$81
19	Water Line Plan and Details	2	1			4	6					11	$491
20	Water Line Profile	1	1			2	6	4				13	$564
21	Electrical Symbols, Data Table - Diagram	1			2		2					4	$193
22	Electrical Lighting Layout/Circuiting	3	2		24		18		2			46	$2,289
23	Electrical Details	5			6		10					16	$727
24	Circuit Maps	4			12		12					24	$1,156
25	Technical Supervision and Review		12									12	$823
	Subtotal	59	24		44	92	101	26	12			299	$14,084

Quantities & Cost Estimate

1	Calculate Quantities					4	4					8	$348
2	Cost Estimate												
	- Update Final Review (95%) Cost Estimates				2	4	2					8	$392
3	Technical Supervision and Review		2									2	$137
	Subtotal		2		2	8	6					18	$877

Engineering Design Report

1	Engineer's Report (95%)												
	- Document with summary and recommendations for civil project layout, pavement design electrical layout, sign plan and voltage calculations, drainage design, exhibits and hydraulic calculations		1		1	24			2			28	$1,386
2	Construction Safety Phasing Plan Report (95%)		1			2	12					15	$614
3	Technical Supervision and Review		2									2	$137
	Subtotal		4		1	26	12		2			45	$2,137

Project Specifications

1	Project Specification-General												
	- Cover and Table of Contents					1						1	$50
	- Prepare Boiler Plate including FAA Compliance					6	4					10	$447
	- Prepare Bid Tab and Agreement												
	- Add Geo-Technical Report & FAA Circulars												
2	Specification - Special Provisions		4			9					2	15	$769
	- Prepare Special Conditions for Project												
3	Technical Specification												
	- Prepare Technical specifications-		4			12					2	18	$918
	Earthwork, Subgrade, Pavement, Marking,												
	Electrical		2		8							10	$611
4	Technical Supervision and Review		6									6	$412
	Subtotal		16		8	28	4				4	60	$3,207
	Subtotal Task 003		46		55	154	123	26	14		4	422	20,304

Alpha Apron Expansion Phase IV
Phoenix-Mesa Gateway Airport
Phoenix-Mesa Gateway Airport Authority

Alpha Apron Expansion Phase IV

DATE: May 2021

			Senior Project Mgr.	Principal Engineer	Electrical/ Comm. Engineer	Prof. Engineer	Analyst	Senior Analyst Designer	Graphic Designer	Finance/ Project Accountant	Admin/ Clerical	TOTAL MAN-HRS	TOTAL LABOR COST
004		**Issued For Bid Submittal (IFB)**											
	1	Construction Drawings	2		12	32	40	4	18			108	$4,663
	2	Quantities & Cost Estimate	2		2	6	4					14	$703
	3	Project Specifications	2		8	24					2	36	$1,852
	4	Technical Supervision and Review	6									6	$412
		Subtotal Task 004	12		22	62	44	4	18		2	164	$7,630
005		**Bid Phase Services**											
	1	Pre-Bid Services											
	a	Issue contract documents,	2			4						6	$336
	b	Attend pre-bid conference, answer contractor questions, prepare addendum	4			4						8	$474
	c	Prepare bid tabulate / summary spreadsheet, submit recommendation of award.	2			4						6	$336
		Subtotal Task 005	8			12						20	$1,146
SUBTOTAL - DESIGN			147	2	187	780	507	94	107	8	26	1,858	87,311

DESIGN EXPENSES

TRANSPORTATION:

Airfare	$250.00	/ ticket X	4	flights for	1	1,000.00	
Vehicle Mileage (Office)	12	trips X	100	miles X	0.575	690.00	**1,690.00**

PRINTING: *(60% Review, 95% Review, & Final IFB Submittals)*

Total # of sets: 3 (4 Copies/Set) = 12

Reports	150	pages	$0.10	per copy	12	180.00	
Drawings	55	plan sheets	$0.50	per copy	12	330.00	
Specifications	550	spec documents @	$0.10	per copy	12	660.00	**1,170.00**

TOTAL EXPENSES = $ 2,860.00

Phoenix-Mesa Gateway Airport Authority
5835 S Sossaman Road
Mesa, Arizona 85212-6014
www.gatewayairport.com

Board Action Item

Re: Resolution 21-23

To:	**Board of Directors**
From:	**Doug Wirthgen, Information Technology Director**
Through:	**Chuck Odom, Chief Financial Officer**
	J. Brian O'Neill, A.A.E., Executive Director/CEO
Subject:	**PROPworks Support and Maintenance**
Date:	**June 15, 2021**

Proposed Motion
To authorize a 5-year contract with Amadeus Airport IT Americas, Inc. (Amadeus) for PROPworks Support and Maintenance in an amount not to exceed $46,057.53 for three years with (2) one-year renewal options not to exceed $16,282.73 and $16,771.22 each year respectively.

Narrative
PROPworks is part of a suite of Amadeus products specialized for airport leasing and property management designed to manage tenant, property, and revenue related information. This system is utilized by the Business Development Department to improve property management and leasing, billing accuracy, communications with all departments, and tracking information about business relationships and the leasing pipeline.

Board authorization for the purchase of the Amadeus annual PROPworks support and maintenance is necessary to continue use of the Amadeus property management software originally purchased in 2016.

In compliance with the Airport's Procurement Policy No.19-27, purchases excluded from multiple quotations/competitive selection requirements include hardware and software licensing renewals and maintenance support.

Fiscal Impact
The annual Year 1 amount is budgeted in the FY22 ITS Operating Budget. Years 2 – 5 operating costs will be budgeted in the appropriate year.

Attachment(s)
Agreement

RESOLUTION NO. 21-23

WHEREAS, the Phoenix-Mesa Gateway Airport Authority ("Authority"), a joint powers airport authority formed pursuant to Arizona Revised Statute §28-8521 *et seq.* owns and operates the Phoenix-Mesa Gateway Airport ("Airport"); and

WHEREAS the Authority desires to authorize a 5-year contract with Amadeus Airport IT Americas, Inc. (Amadeus) for PROPworks Support and Maintenance in an amount not to exceed $46,057.53 for three years with (2) one year renewal options not to exceed $16,282.73 and $16,771.22 each year respectively.

NOW, THEREFORE, BE IT RESOLVED by the Board of Directors of the Authority as follows:

> **The Board of Directors of the Authority hereby authorizes a 5-year contract with Amadeus Airport IT Americas, Inc. (Amadeus) for PROPworks Support and Maintenance in an amount not to exceed $46,057.53 for three years with (2) one year renewal options not to exceed $16,282.73 and $16,771.22 each year respectively. This resolution also authorizes the Chair or Executive Director/CEO to execute such contract, with such additions, deletions, and changes as may be approved by the Chair or Executive Director/CEO, necessary to carry out the purposes and intent of this Resolution.**

Passed and adopted by the Authority this 15th day of June, 2021.

Gail Barney, Chair

ATTEST:

Misty Johnson, Clerk of the Board

APPROVED AS TO FORM:

Jill Casson Owen, Attorney

CONFIDENTIAL & RESTRICTED

amadeus®

PROPworks® Support and Maintenance

Phoenix Mesa Gateway Airport Authority

Prepared by: Crystal Carvalho

Date: May 12, 2021

Table of Contents

Table of Contents ii
Support and Maintenance Agreement iv
Section 1 – Definitions iv
Section 2 – Scope of Services v
Section 3 – PMGAA Duties vii
Section 4 – Proprietary Rights vii
Section 5 – Disclaimer of Warranty and Limitation of Liability viii
Section 6 – Term and Termination viii
Section 7 – Miscellaneous ix
Exhibit A – Covered Programs xii
PROPworks® xii
Exhibit B – Rates & Terms Schedule xiii
Telephone and Web-based Remote Assistance xiii
Annual Software Maintenance xiii
PROPworks® Support and Maintenance xiii
Exhibit C – PROPworks® Software License and Warranty xiv

PROPworks®
Property & Revenue Management

Support and Maintenance Agreement

This SUPPORT AGREEMENT ("Agreement") is made and entered into as of the ____ day of _____, 2021 (the "Effective Date") by and between Amadeus Airport IT Americas, Inc. (formerly Air-Transport IT Services, Inc.) (hereinafter "Amadeus") a Delaware Corporation, with principal offices at 5950 Hazeltine National Drive, Suite 210, Orlando, Florida 32822, and Phoenix Mesa Gateway Airport Authority, a joint powers airport authority authorized by the State of Arizona (hereinafter "PMGAA"), with principal address at 5835 South Sossaman Road, Mesa, Arizona 85212-6014.

WITNESSETH:

WHEREAS, Amadeus and PMGAA entered into an Amendment to Contract C-2016001 for CIP No. 825 – CUSE Replacement, dated July 19th, 2016 (the "License Agreement") under which PMGAA obtained a nonexclusive, nontransferable, perpetual license to use certain computer programs in object code form and related user documentation (the "Licensed Program") on certain terms and conditions; and

WHEREAS, Amadeus desires to make, and offer to PMGAA maintenance, modifications, enhancement, new releases, and telephone support; and

WHEREAS, PMGAA desires the benefit of certain services from Amadeus with respect to the Licensed Program on the terms and conditions set forth herein;

NOW THEREFORE, in consideration of the premises hereof, and the mutual obligations herein, the parties hereto, intending to be legally bound, hereby agree as follows:

Section 1 – Definitions

PROPworks®
Property & Revenue Management

For the purposes of this Agreement, the following definitions shall apply to the respective capitalized terms.

1.1 "**Enhancement.**" Any modification or addition that, when made or added to the Licensed Program, materially changes the utility, efficiency, functional capability, or application, but that does not constitute solely an Error Correction. Enhancements may be designated by Amadeus as minor or major, depending on Amadeus' assessment of their value and of the function added to the preexisting Licensed Program.

1.2 "**Error.**" Any failure of the Licensed Program to substantially conform to its functional specifications as published from time to time by Amadeus. However, any nonconformity resulting from PMGAA's misuse, improper use, alteration, or damage of the Licensed Program, or PMGAA's combining or merging the Licensed Program with any hardware or software not supplied or identified as compatible by Amadeus, shall not be considered an Error.

1.3 "**Error Correction.**" Either a modification or an addition that, when made or added to the Licensed Program, establishes substantial conformity of the Licensed Program to the functional specifications, or a procedure or routine that, when observed in the regular operation of the Licensed Program, eliminates the practical adverse effect on PMGAA of such nonconformity.

1.4 "**Licensed Program.**" The computer programs described in Exhibit A attached hereto, including any extracts from such programs, derivative works of such programs, or collective works including such programs (such as subsequent Releases) to the extent offered to PMGAA under this Agreement or the License Agreement.

1.5 "**Normal Working Hours.**" The hours between 8:00 a.m. and 5:00 p.m. Eastern Standard (or Daylight) Time, on the days Monday through Friday, excluding regularly scheduled holidays of Amadeus.

1.6 "**Releases.**" New versions of the Licensed Program, which may include both Error Corrections and Enhancements.

1.7 "**Reasonable Assistance.**" Amadeus will provide explanation and interpretation of the Release Notes for each release, and correction if necessary. Telephone and web based support is intended to deal with technical and operational issues in respect of Amadeus' software and configuration work performed by Amadeus; this assistance does not extend to providing user and support staff training. Work to install, upgrade, maintain or configure third party products is not included in this Support and Maintenance Agreement except as noted. Amadeus does offer consulting and implementation services, at the published rates, to provide installation of third party products subject to a separate, agreed scope of work.

1.8 "**Agreement Term.**" Is the effective period of the Agreement in which services will be provided and for which fees are due, including any renewal terms. The Agreement Term and Rates are stated in Exhibit B.

1.9 "**User Acceptance Testing.**" UAT is considered an implementation activity, performed under a separate scope of services for system implementation or subsequent upgrades. The purpose of UAT is to establish that configurations and system functions can be performed by users as described in product and project documentation, and consistently predictable results obtained. Performance of UAT is primarily a PMGAA responsibility.

1.10 "**System Testing.**" Is an activity performed in the software development cycle in the Quality Assurance phase, and is completed before the release of new releases, updates and patches. The purpose of System Testing is to ensure that all functions and features perform as designed, together, without error and at acceptable performance levels. Amadeus is responsible for System Testing and it is performed at Amadeus' locations in dedicated development, support and QA environments. System Testing can also result in certification of PROPworks® to run on various third party required software infrastructure such as operating systems and databases.

Section 2 – Scope of Services

PROPworks® Property & Revenue Management

2.1 Amadeus shall maintain a trained staff capable of rendering the services set forth in this Agreement.

2.2 During the Agreement Term, Amadeus shall render the following services as indicated below in support of the Licensed Program, during Normal Working Hours, subject to the compensation fixed for each type of service in Amadeus' rate schedule set forth in Exhibit B attached hereto:

2.2.1 Telephone Assistance. Amadeus shall maintain a telephone hotline that allows up to three (3) persons designated by PMGAA to seek technical or operation assistance in use of the Licensed Program. Telephone and web-based remote assistance is available during Normal Working Hours. Amadeus also maintains a web-based service request and monitoring system which is normally available 24 hours per day and is the preferred way of initiating non-emergency service requests. User accounts will be set up on request.

2.2.2 Software Maintenance. PMGAA shall report in a written notice of Amadeus Errors for which it desires Amadeus to provide an Error Correction. Amadeus shall, within eight (8) hours of verifying that an Error is present, initiate work in a diligent manner toward development of an Error Correction. Amadeus shall be responsible for using reasonable diligence to correct verifiable and reproducible Errors when reported by PMGAA to Amadeus. Amadeus shall include the Error Correction in all subsequent Releases of the Licensed Program. Amadeus shall not be responsible for correcting Errors in any version of the Licensed Program other than the most recent Release of the Licensed Program, provided that Amadeus shall continue to support prior Releases superseded by recent releases for a reasonable period sufficient to allow PMGAA to implement the newest Release, not to exceed one hundred and eighty (180) days.

2.2.3 PMGAA Training and Implementation Services. Implementation services and direct training on the configuration, operation and use of the licensed system are not included in the Support and Maintenance Agreement fee. PMGAA on-site training and implementation is available from Amadeus (see Exhibit B for terms). A scope of services will be provided upon request from PMGAA. The terms of the training or implementation services will be included in a scope of work.

2.2.4 PMGAA-Requested Enhancements. PMGAA requests for enhancements to the Licensed Program will be reviewed by Amadeus and disposed of in one of the following ways: (1) Accepted for development and inclusion in a future release at no direct cost. (2) Offered to the PMGAA as a "Customization", with source code, or (3) Rejected, with an explanation and offers of alternatives.

2.2.5 PMGAA-Requested Enhancements determined to be "Custom" are offered at Amadeus' published hourly rates at the time of the enhancement request. Requirements for the enhancement must be confirmed in writing when an estimated cost, including estimated expenses, will be provided by Amadeus in the form of a scope of work addendum. A purchase order is required before commencement of development work.

2.2.6 Major Enhancements – New Modules. Amadeus may, from time to time, offer major Enhancements to its customers generally. Such Major Enhancements will be offered at Amadeus' then current license fee rates.

2.2.7 Major Enhancements – Technology Changes. Amadeus may, from time to time, offer major Enhancements that involve technology changes to its customers generally. Such Enhancements will be included in a New Release for no additional fee. Installation, configuration, documentation and implementation of third party products that may be required to put the new technology into production are not included in this Agreement. Amadeus will provide support on install scripts and error correction on installation instructions created by Amadeus, and Reasonable Assistance to interpret or correct installation instructions based on the assumption that the installer is properly qualified to perform the install tasks. New Technology changes may include the use of "Open Source Software", and use, subject to additional licensing requirements that will be made known to PMGAA. The direct support of Open Source Software under this agreement is limited to code modifications and additions created by Amadeus.

2.2.8 Support of Third Party Software. Amadeus maintains support agreements for the open-source software products and provides necessary support and upgrades without additional cost to PW licensees with a valid Support and Maintenance agreement. Should a client choose to extend the use of these products beyond Amadeus applications the "free" support will not cover these extensions. Support is limited to software and versions supplied by Amadeus and as indicated in Release Notes.

PROPworks®
Property & Revenue Management

2.3 New Releases. Amadeus may, from time to time, issue new Releases of the Licensed Program to its customers generally, containing Error Corrections, minor Enhancements, and, in certain instances if Amadeus so elects, Major Enhancements. Amadeus shall provide PMGAA with electronic access to each new Release. Each New Release is delivered with a "Release Notes" document. The document provides full instructions for a new installation and how to upgrade from the previous version. The installation upgrade may require installation and/or reconfiguration of third party products, including hardware, software and network communications items.

2.4 Upgrade Assistance. Amadeus shall provide Reasonable Assistance to help PMGAA install and operate each New Release of the Amadeus products covered by this agreement, provided that such assistance, if required to be provided at PMGAA's facility, shall be subject to a separate, agreed scope of work. Such Reasonable Assistance does not include User Acceptance Testing. System Testing is performed by Amadeus prior to release of upgrades and patches but is not offered as an on-site service.

2.4.1 Support for PROPworks® software versions older than 8.5. Amadeus recommends that customers upgrade to a current, supported version as soon as possible to receive the highest level of support. To perform upgrades on older versions of PROPworks example 7.5 and older, an Amadeus consulting effort will be required. Please contact support for further assistance or open a work order ticket for an upgrade request through ACSP (Amadeus Customer Service Portal). On obsolete or de-supported product versions, only limited support can be provided that includes answers to customer questions and known workarounds. Support for obsolete and de-supported product versions does not include software error correction

support, back porting of fixes, certification with supported products or newer operating system releases, escalation support or guaranteed response times.

2.5 Amadeus sponsors an Annual User Conference for which an attendance fee is payable. The rate per attendees is identified each year in the conference registration packet. Exhibit B includes information on the number of attendees PMGAA is entitled to send without charge.

2.6 Amadeus offers prepaid consulting units at a discounted rate. The prepaid consulting unit rate is published annually, effective January 1st. Prepaid consulting units are available in 40 hour blocks prepaid at the time of renewal and anniversary date of the Support and Maintenance agreement. Use of the prepaid consulting units will be subject to a separate, agreed scope of work.

Section 3 – PMGAA Duties

PMGAA is obliged to perform the following duties:

3.1 PMGAA shall pay Amadeus the fees and charges according to the rate schedule set forth in Exhibit B attached hereto. Amadeus reserves the right to change its rate schedule annually, on the Anniversary Date, The change in fees and charges shall not exceed 3% annually.

3.2 PMGAA shall pay to Amadeus the maintenance fee on the frequency designated in Exhibit B.

3.3 PMGAA shall be responsible for procuring, installing, and maintaining all equipment, telephone lines, communications interfaces, and other hardware necessary to obtain the services called for by this Agreement.

3.4 PMGAA shall provide Amadeus with database exports as requested, and with sufficient support and test time on the PMGAA's computer system to duplicate the error, certify that the error is with the Licensed Program, and certify that the error has been corrected.

PROPworks®
Property & Revenue Management

3.5 Amounts payable to Amadeus under this Agreement are exclusive of all federal, state, provincial, municipal or other governmental excise, sales, value-added, use, personal property and occupational taxes, excises, withholding obligations and other levies now in force or enacted in the future and, accordingly, the amount of all payments hereunder is subject to an increase equal to the amount of any tax Amadeus may be required to collect or pay in connection with the support and maintenance services.

3.6 Any sums owed by PMGAA under this agreement greater than sixty (60) days past due shall result in the temporary suspension of the support services provided under this agreement, including access to updates and New Releases to the software. Any suspension caused by non-payment will not extend the term of this agreement or reduce the total cost.

Section 4 – Proprietary Rights

4.1 To the extent that Amadeus may provide PMGAA with any Error Corrections or Enhancements or any other program, PMGAA may use such Error Correction or Enhancements in connection with the Licensed Programs, and in a manner consistent with the requirements of the License Agreement. PMGAA may not use, copy, modify, decompile, reverse engineer, adapt, or create derivative works of the Licensed Programs, Error Corrections or Enhancements, or any copy, adaptation, transcription, or merged portion thereof, except as expressly authorized by Amadeus. Notwithstanding Section 6 hereof, PMGAA's rights under this Section 4.1 shall remain in effect for so long as PMGAA is authorized to use the Licensed Programs under the License Agreement. In the case of termination of the License Agreement, PMGAA shall return or destroy the Licensed Programs, Error Corrections and Enhancements

in the manner required by the License Agreement and PMGAA's certification of return or destruction shall be sufficient for such purpose.

4.2 The Licensed Programs, Error Corrections, and Enhancements, including without limitation any associated intellectual property rights such as copyright and patent, are and shall remain the sole property of Amadeus, regardless of whether PMGAA, its employees, agents, or contractors may have contributed to the conception of such work, joined in the effort of its development, or paid Amadeus for the use of the work product. PMGAA shall from time to time take any further action and execute and deliver any further instrument, including documents of assignment or acknowledgment that Amadeus may reasonably request in order to establish and perfect its exclusive ownership rights in such works, including any associated intellectual property rights.

Section 5 – Disclaimer of Warranty and Limitation of Liability

5.1 Amadeus' cumulative liability to PMGAA or any other party for any loss or damage resulting from any claims, demands or actions arising out of or relating to this Agreement shall not exceed the license fees paid to Amadeus. In no event will either party be liable for any indirect, special, incidental, consequential or exemplary pecuniary loss or damages arising out of the use or inability to use the Licensed Program even if Amadeus has been advised of the possibility of such damages. Specifically, Amadeus shall not be responsible for any costs including, but not limited to, loss of profits or revenue, loss of use of the Licensed Program, or loss of data. In addition, after the warranty period, Amadeus will not be liable for performing recovery services due to the failure of software or data. In no event will Amadeus' liability to PMGAA arising out of or in connection with this Agreement, whether arising out of breach of contract or tort, exceed the annual maintenance fee actually paid to Amadeus by PMGAA hereunder for the twelve (12) month period in which the claim arose.

Section 6 – Term and Termination

PROPworks®
Property & Revenue Management

For the purposes of this Agreement, the following Term and Termination shall apply to the respective capitalized terms.

1. 6.1 This Agreement shall be valid for three (3) years, expiring on July 31, 2024 ("Initial Term"). This Agreement has two (2) optional one-year extensions that PMGAA may exercise as its sole discretion. Prior to the expiration of the Initial Term, PMGAA may elect to extend the Agreement. If PMGAA exercises such right, all terms, conditions and provisions of the original Agreement shall remain the same and apply during the extended period with the possible exception of price. Any extension of this Agreement shall require an Amendment signed by both parties.

6.2 This Agreement may be terminated as follows:

6.2.1 This Agreement shall immediately terminate upon the termination of the License Agreement;

6.2.2 This Agreement may be terminated by either party without cause, provided the terminating party gives thirty (30) days' advance written notice to the other party. If this Agreement is terminated, then PMGAA is liable only for services rendered and material received, certified, and approved by PMGAA under the Agreement before the termination effective date. If terminated by Amadeus under clause 6.2.2, PMGAA shall be entitled to receive a prorated refund of the current annual fees paid; or

6.2.3 This Agreement may be terminated by either party upon ten (10) days' prior written notice if the other party has materially breached the provisions of this Agreement and has not cured such breach within such notice period.

6.2.4 In the event Amadeus is in violation of any federal, state, county or local law, regulation or ordinance, PMGAA may terminate the Agreement immediately upon providing notice to Amadeus.

6.3 Following termination or expiration of this Agreement, PMGAA may continue to use the Licensed Program and any custom products or work, such as reports, supplied to PMGAA by Amadeus for the remaining term of the License Agreement.

Section 7 – Miscellaneous

7.1 Waiver. The failure of any party to enforce any of the terms of this Agreement shall not constitute a waiver of that party's right thereafter to enforce any such term or upon notice, to require correction of a default previously waived.

7.2 Export of Products. PMGAA who exports software, databases or documentation assumes liability for complying with applicable laws and regulations and for obtaining required export and import authorizations. PMGAA will not export or re-export software, databases or documentation or any technical data in violation of applicable export regulations.

7.3 Entire Agreement. This Agreement together with Exhibits A, B, C and any attached Amadeus Agreement constitute the entire agreement between the parties relating to the subject matter contained in it and supersede all prior and contemporaneous representations, agreements, or understandings between the parties. No amendment of this Agreement shall be binding unless executed in writing by the parties.

7.4 Severability. If any part, term or condition of this Agreement is held void or unenforceable, such part shall be treated as severed, leaving valid the remainder, and a new, enforceable provision shall be substituted therefore which accomplishes the intent of the severed provision as nearly as practicable.

7.5 Notices. All notices required or permitted under this Agreement shall be in writing and will be effective when (i) deposited in the U.S. Mail, certified, return receipt requested, postage prepaid or (ii) forwarded by reputable express courier providing written receipt of delivery and addressed to the parties at their respective addresses set forth below, or to any other address the parties may substitute by written notice given in the manner prescribed in the paragraph:

PROPworks®
Property & Revenue Management

In the case of Amadeus:

Amadeus Airport IT Americas, Inc.

Attn: Chris Keller

5950 Hazeltine National Drive, Suite 210

Orlando, FL 32822

In the case of PMGAA:

Phoenix Mesa Gateway Airport Authority

Attn: Information Technology Director

5835 S. Sossaman Road

Mesa, AZ 85212

7.6 Governing Law. This Agreement shall be governed by the laws of the State of Arizona without regard to conflicts of law provisions.

7.7 No amendment of this Agreement shall be binding unless executed in writing by the parties.

7.8 Assignment. Services covered by this Agreement may not be assigned or sublet, in whole or in part, without first obtaining the written consent of PMGAA. An authorized assignee shall be deemed to have all the rights and obligations of the assigning Party. No assignment shall release the assigning Party from any of its obligations hereunder.

7.9 Successors and Assigns. This Agreement extends to and is binding upon Amadeus, its successors and assigns, including any individual, company, partnership or other entity with or into which Amadeus merges, consolidates or is liquidated, or any person, corporation, partnership or other entity to which Amadeus sells its assets.

7.10 Agreement Administrator. The Agreement Administrator for PMGAA is Doug Wirthgen or designee. The Agreement Administrator will oversee the execution of this Agreement, assist Amadeus in accessing the organization, audit billings, approve payments, establish delivery schedules, and assure Certificates of Insurance are current, conform to the Agreement requirements, and are in PMGAA's possession. Amadeus will direct reports and special requests through the Agreement Administrator.

7.11 Advertising. No advertising or publicity concerning PMGAA using Amadeus's services shall be undertaken without prior written approval of such advertising or publicity by PMGAA.

7.12 Funds Appropriation. If PMGAA does not appropriate funds to continue and pay for charges under this Agreement, PMGAA may terminate this Agreement at the end of its then-current fiscal period. PMGAA agrees to give written notice of such termination to Amadeus at least 15 (fifteen) days prior to the end of its current fiscal period and will pay to Amadeus all approved charges incurred through the end of such period.

7.13 Compliance with Federal and State Laws. Amadeus understands and acknowledges the Americans with Disabilities Act, the Immigration Reform and Control Act of 1986, and the Drug Free Workplace Act of 1989 apply to its services under this Agreement.

PROPworks®
Property & Revenue Management

7.14 Immigration Law Compliance. Under the provisions of A.R.S. §41-4401, Amadeus warrants to PMGAA that Amadeus and all its subcontractors will comply with all federal immigration laws and regulations that relate to their employees and that Amadeus and all its subcontractors now comply with the E-Verify Program under A.R.S. §23-214(A).

A breach of this warranty by Amadeus or any of its subcontractors will be considered a material breach of this Agreement

IN WITNESS WHEREOF, the parties have caused this Agreement to be executed on _____, _____ by their duly authorized representatives as set forth below.

Executed By:

Phoenix Mesa Gateway Airport Authority, a joint powers airport authority authorized by the State of Arizona
5835 South Sossaman Road
Mesa, Arizona 85212

Executed By:

Amadeus Airport IT Americas, Inc.
5950 Hazeltine National Drive, Suite 210
Orlando, Florida 32822

Authorized Signatures:

By: _____

Name: J. Brian O'Neill, A.A.E._____

Title: Executive Director/CEO _____

By: _____

Chris Keller _____

Vice President _____

PROPworks®
Property & Revenue Management

Exhibit A – Covered Programs

PROPworks®

- Core Modules:
  - Agreement Module
  - Billing & Invoicing Module
  - Company Module
  - Concession Module
  - Events, Ticklers and Notifications
- Optional Modules:
  - Aeronautical Statistics
  - Insurance & Sureties
  - Carrier Activity Tracking
  - Portal

PROPworks®
Property & Revenue Management

Exhibit B – Rates & Terms Schedule

Telephone and Web-based Remote Assistance

Telephone and web-based remote assistance is included in the annual maintenance fee and available 8 a.m. to 5 p.m. Eastern Standard Time Monday through Friday except designated public and company holidays.

Annual Software Maintenance

The Initial Term of the Agreement is from August 1, 2021 through July 31, 2024. There are two (2) optional one-year extensions as provided for in Section 6 of this Agreement.

The Anniversary Date is August 1st . Annual rates are as follows for Support and Maintenance.

Annual Software Maintenance is based on:

- Annual increase of 3%

PROPworks® Support and Maintenance

ITEM	DESCRIPTION	QTY	UNIT	UNIT SELL PRICE	TOTAL EXTENDED SELL PRICE
PROPworks® Support and Maintenance					
1	Annual PROPworks® Maintenance and Support August 01, 2021 through July 31, 2022	1	LOT	14,901.01	$14,901.01
2	Annual PROPworks® Maintenance and Support August 01, 2022 through July 31, 2023	1	LOT	15,348.04	$15,348.04
3	Annual PROPworks® Maintenance and Support August 01, 2023 through July 31, 2024	1	LOT	15,808.48	$15,808.48

PROPworks® Property & Revenue Management

Payment Frequency:

The maintenance fee shall be billed and payable annually in advance, on the Anniversary Date.

On-Site User Training and Implementation Services:

Services provided by Amadeus outside the scope of this Agreement are available, based on then-current published rates. Such services shall be provided under a separate scope of work.

Amadeus User Conference Attendance Fee:

The Amadeus User Conference Attendance Fee is included for five (5) users each year. Additional users may attend for a fee. The additional attendee fee will be provided each year in the Conference Registration Packet.

Additional Notes:

Consulting and additional support services outside the scope of this agreement are not covered under the terms of this agreement. For all additional services provided, PMGAA is responsible for expenses incurred.

Exhibit C – PROPworks® Software License and Warranty

Software License and Warranty

1. LICENSE: In consideration of the payment of the making of the Agreement between the parties, the receipt and sufficiency of which Licensor acknowledges, Licensor grants Licensee an indivisible, non-exclusive, non-transferable, and revocable, license to use (a) Licensor's computer software described in Schedule "A" in machine-readable form and (b) the related online user manuals and documentation, which together comprise the "Licensed Software," for the term set forth in paragraph 8 below. Licensee is responsible for converting its own data files into data usable by the Licensed Software. Excluded from the Licensed Software is any separately identified third-party software that is not being licensed to Licensee hereunder, and must be independently obtained by Licensee. If applicable, Licensee will be required to acquire a valid third party software license in order to operate the Licensed Software. This Addendum grant to Licensee is a license to use the Licensed Software only, and is not a sale of the Licensed Software or of any copy or portion thereof. If a user limitation is stated in the Agreement, Licensee may not exceed use by more than said user limitation.

2. SCOPE OF RIGHTS: Licensee may:

(a) Install the Licensed Software on computer systems owned, leased, or otherwise controlled by Licensee at its own facilities.

(b) Use the Licensed Software on Licensee's computer systems for the sole purpose of serving the internal needs of Licensee's business, only at the locations specified in Schedule "A."

(c) Make one copy of the Licensed Software (in machine-readable form only) as necessary only for non-productive back-up or archival purposes in accordance with Licensee's standard procedures. For any additional copies made or used by Licensee, Licensee agrees to pay a license fee in respect of such additional copies, as mutually agreed by the parties. Any surplus copies of the Licensed Software and the documentation not needed for Licensee's internal use, back-up, or archival purposes shall be promptly returned to Licensor. No credit shall be given to Licensee for such returned copies of the Licensed Software.

3. PROHIBITED ACTS AND USES: Licensee may not use, copy, distribute, publish, recast, translate, modify, change, revise, or alter the Licensed Software, or any copy, adaptation, transcription, derivations, or merged portion thereof, except as expressly authorized by licensor. Licensee may not sell, donate, share, transfer, assign, pledge, encumber, lease, rent, license, or sublicense the Licensed Software, or any portions, derivations, or adaptations hereof, except to a successor-in-interest of Licensee's entire business who assumes, in writing, the obligations of this Addendum. No service bureau work or time-sharing arrangements are permitted unless expressly authorized by the Licensor. Placement on and/or use of the Licensed Software on processors accessible through communication networks using terminals and devices not on Licensee's premises is prohibited.

4. EQUIPMENT: The Licensed Software is designed for use on computer hardware specified on Schedule "B." Licensor reserves the right to approve in advance the use by Licensee of any hardware, equipment, communication boards, and peripherals used in conjunction with the Licensed Software. Such approval shall not be unreasonably withheld. Licensee is solely responsible for site preparation and environmental control and stability at the location where the Licensed Software is installed. Licensor has no responsibilities concerning Licensee's facilities or equipment.

5. LICENSEE'S RESPONSIBILITIES IN USE OF THE LICENSED SOFTWARE: Licensee shall be responsible for the installation, supervision, management, operation, and control of the Licensed Software, including, but not limited to:

(a) Assuring proper machine configuration, program installation, operating system release level, audit controls and operating methods;

(b) Establishing adequate backup and disaster recovery plans;

(c) Implementing sufficient procedures and checkpoints to satisfy Licensee's requirements for security and accuracy of data input and output, as well as restart and recovery, in the event of a malfunction or loss of data;

Copyright © 1993-2017 Amadeus Airport IT Americas, Inc. All rights reserved
Software License -US-LIC1.DOC
August 22, 2017

(d) Designating a Project Manager to have overall responsibility and authority concerning the installation, operation, and management of the Licensed Software; and

(e) Maintaining at least one adequate and restorable backup of the Licensed Software and all third party software.

6. PROPRIETARY PROTECTION OF LICENSED SOFTWARE:

(a) Licensee acknowledges that the Licensed Software constitutes trade secrets and proprietary data of Licensor and that the Licensed Software contains proprietary products licensed to Licensee, which shall remain the property of Licensor before, during, and after termination of this Addendum. Licensor has sole and exclusive ownership and copyright of all right, title, and interest in the Licensed Software and in any applications, modifications, improvements, or enhancements to the Licensed Software, including ownership of all trade secrets and copyrights pertaining to the Licensed Software and all works derived from the License Software, regardless of the media in which the Licensed Software is contained, recorded, or fixed.

(b) Licensee may not, at any time, disclose or disseminate the trade secrets embodied in the Licensed Software to any person, firm, organization, or employee who does not need to obtain access thereto consistent with Licensee's rights under this Addendum. Under no circumstances may Licensee copy, "unlock," de-compile, dissemble, reverse assemble, or reverse engineer the binary or object code of the Licensed Software, as these terms are generally used in the trade. Under no circumstances may Licensee disclose or disseminate any trade secrets contained in the Licensed Software to any competitor of Licensor. Licensee will devote its best efforts to ensure that all Licensees' personnel and all other persons afforded access to the Licensed Software protect Licensor's copyrights and trade secrets against improper use, dissemination, or disclosure.

(c) Licensee must reproduce and include in all copies of the Licensed Software prepared by Licensee and approved by Licensor the copyright notice(s) and proprietary legend(s) of Licensor and Licensor's licensors/vendors (if any) as they appear in the Licensed Software supplied to Licensee.

(d) Licensee acknowledges that, in the event of Licensee's breach of any of the foregoing provisions, Licensor may not have any adequate remedy in money damages. Licensor shall therefore be entitled to obtain an injunction against such breach from any court of competent jurisdiction immediately upon request without requirement of bond or other security. Licensor's right to obtain injunctive relief shall not limit its right to seek additional remedies.

(e) Licensee's obligations hereunder shall remain in effect for as long as Licensee continues to possess or use the Licensed Software or any trade secrets or works derived therefrom.

7. WARRANTIES OF LICENSOR; LIMITATIONS OF LIABILITY: Licensor warrants to Licensee that at the time of delivery of the Licensed Software to Licensee:

(a) Licensor has the right to furnish the Licensed Software free of all liens, claims, and encumbrances imposed by or through Licensor;

(b) The Licensed Software will perform, on an appropriately configured computer system, in the manner described in Licensor's published documentation. No warranty is provided by Licensor for any thirty-party software;

(c) That Licensor further warrants that the Licensed Software is the latest developed version and edition of said software, and that any subsequent version issued within two years of the date of this contract will be furnished to Licensee at no cost, provided only that the License granted hereunder is in force, under maintenance and support by Licensor, and all fees have been paid by Licensee.

(d) Licensor is not responsible for any obsolescence of the Licensed Software (i) that may result from changes in Licensee's requirements, (ii) from changes in federal, state, or local laws or regulations, or (iii) any operating systems, interface programs, or any third-party software used in conjunction with the Licensed Software.

Copyright © 1993-2017 Amadeus Airport IT Americas, Inc. All rights reserved

(e) Licensor's sole responsibility to Licensee or to any third party for any claims, notwithstanding the theory of such claims (e.g., contract, breach of warranty, negligence or otherwise) arising out of errors or omissions in the Licensed Software provided hereunder and caused by Licensor (provided that Licensee shall have promptly notified Licensor of any such errors or omissions), shall be to correct the errors or omissions or replace the Licensed Software with another copy thereof. Licensor does not warrant that the Licensed Software will operate without interruption or error free or that its functions will meet Licensee's particular requirements, now or in the future. Licensee is solely responsible for ensuring the Licensed Software will accommodate its current and anticipated business needs.

(f) Licensor shall not be responsible for, and all warranties shall be void for, any malfunction of the Licensed Software due to Licensee's unauthorized copying or modification of the Licensed Software, failure to properly use the Licensed Software for its intended purpose, or failure to install, use, or maintain the Licensed Software on Licensor-approved equipment.

(g) Licensor shall not be liable to Licensee for errors resulting from defects in, or malfunctions of, the mechanical or electronic equipment used by Licensee in conjunction with the Licensed Software, for Licensee or its agents' failure to follow licensor's instructions, use of non-licensed products with the Licensed Software, or for factors beyond Licensor's ability to control.

(h) It is the intent of the parties that Licensee's sole remedy for breach of warranty or breach of contract be limited to the repair and replacement of defective Licensed Software, and if that cannot be accomplished, then in no event damages exceeding the amounts paid to Licensor for the license fee hereunder or as provided under the Agreement. In the event Licensee recovers insurance proceeds pursuant to licensee's insurance, such proceeds shall constitute a setoff against actual damages claimed by Licensee. It is understood that all costs and expenses of such insurance shall be paid by Licensee.

(i) UNLESS OTHERWISE EXPRESSLY STATED HEREIN, IN NO EVENT WILL LICENSOR BE RESPONSIBLE FOR SPECIAL, INDIRECT, RELIANCE, INCIDENTAL, OR CONSEQUENTIAL DAMAGES ARISING OUT OF ANY ACT OR OMISSION BY LICENSOR IN CONNECTION WITH THIS ADDENDUM, EVEN IF LICENSOR HAS BEEN ADVISED OF THE POSSIBILITY OF SUCH DAMAGES, WHETHER SUCH DAMAGES ARISE IN AN ACTION AT LAW OR IN EQUITY, FOR BREACH OF CONTRACT, BREACH OF WARRANTY, PRODUCT LIABILITY, BREACH OF UCC PROVISIONS, NEGLIGENCE, GROSS NEGLIGENCE, OR INTENTIONAL TORT. FURTHERMORE, LICENSOR SHALL NOT BE LIABLE FOR LICENSEE'S LOST PROFITS, LOSS OF BUSINESS OPPORTUNITIES, LOSS OF SAVINGS, LOSS OF REVENUE, OR FOR EXEMPLARY DAMAGES. THE PROVISIONS HEREOF ARE IN LIEU OF AND EXCLUDE ALL OTHER WARRANTIES, EXPRESS OR IMPLIED, WHETHER OF MERCHANTABILITY, FITNESS, OR OTHERWISE. IN THE EVENT THE ABOVE EXCLUSION OF IMPLIED WARRANTIES IS FOUND NOT TO APPLY TO LICENSEE, THEN IN ANY EVENT AND UNDER ANY THEORY OR FORM OF ACTION, LICENSOR'S LIABILITY WILL NOT EXCEED THE AMOUNT OF THE LICENSE FEE PAID BY LICENSEE TO LICENSOR UNDER THIS ADDENDUM OR AS PROVIDED UNDER THE AGREEMENT.

(j) Licensor has set the license fee and maintenance fee based on the allocation of risks set forth in this paragraph 7 and the parties have bargained for and agree to the provisions of this paragraph 7.

8. TERM AND TERMINATION: This Addendum shall become effective on the Effective Date and, unless terminated as set forth below, shall remain in effect until terminated in writing by either party. This License shall automatically terminate if Licensee ceases to be a customer of Licensor or if the Agreement between the Parties terminates.

(a) In the event of Licensee's violation of any covenants or promises in this Addendum, including those relating to copying or distributing the Licensed

Copyright © 1993-2017 Amadeus Airport IT Americas, Inc. All rights reserved

Software, confidentiality, allowing unauthorized (by Licensor) persons or entities to use or access the software, competitive use, or any other violation of restrictions protecting Licensor or the Licensed Software, Licensor shall have the right to terminate this Addendum and the license granted herein immediately, to seek injunctive relief, and to obtain all other applicable remedies afforded by law or equity against Licensee.

(b) Licensor shall have the right to terminate this Addendum if (i) any sums due to Licensor remain unpaid more than thirty (30) days after the date of invoice, or (ii) shall be considered a material default under this Addendum, and Licensor shall have the right to terminate this Addendum, if the default remains uncured 15 days after Notice of Default is sent to Licensee specifying the default and describing the actions necessary to remedy the default.

(c) Upon termination of this Addendum, all rights granted to Licensee hereunder shall expire, terminate, and revert to Licensor. Promptly upon termination of Addendum for any reason or upon discontinuance or abandonment of Licensee's possession or use of the Licensed Software, Licensee must return all copies of the Licensed Software, including archived copies, and all documentation in Licensee's possession (whether modified or unmodified), and all other materials pertaining to the Licensed Software (including all copies thereof).

9. MAINTENANCE OF LICENSED SOFTWARE: If mutually agreed, Licensor agrees to provide maintenance and support services for the Licensed Software pursuant to the terms and conditions of a separate Support Agreement.

10. EXPORT RESTRICTIONS: This Addendum is made subject to any restrictions concerning the export of the Licensed Software or any part thereof from the United States of America. Licensee shall not export, directly or indirectly, the Licensed Software, not any other technical data received from Licensor, in violation of such laws. Licensee shall not export, transmit, or broadcast, directly or indirectly, the Licensed Software or technical information therefrom acquired from Licensor under this Addendum to any country for which the United States government or any agency thereof at the time of export requires an export license or other governmental approval, without first obtaining the written consent to do so from Licensor and the United States Department of Commerce and other authorized agencies of the United States government when required by an applicable statute or regulation. Licensee represents and warrants that the Licensed Software will not be provided, either directly or indirectly, to any of the following countries or to any national or resident thereof, unless Licensee has obtained prior written authorization of Licensor and the United States Department of Commerce: Cuba, Libya, Iran, Iraq, Sudan, Syria, North Korea, and any country embargoed by executive order. Upon notice to Licensee, Licensor shall have the right to modify this list to conform to changes in the United States Export Control Regulations.

11. CONFIDENTIALITY: Licensee shall use its best efforts to maintain the secrecy of any confidential information of Licensor disclosed to Licensee that has been marked "proprietary," "secret," or "confidential." During and after the term of this Addendum, Licensee shall refrain from using, disclosing, or otherwise exploiting any such confidential information relating to the Licensed Software for any purpose not specifically authorized in writing by Licensor. Licensee shall return or destroy all confidential information of Licensor within ninety (90) days after the termination of this Addendum, including any notes, summaries or extracts from such confidential information, and Licensee shall certify to Licensor in writing that Licensee has fully complied with this Section 11.

12. INDEMNIFICATION: Licensee shall defend, indemnify, and hold harmless Licensor, its officers, directors, shareholders, employees, agents, and contractors, from and against any loss or liability arising from any claims, suits, demands, or actions (including reasonable attorneys' fees and suit costs) arising out of or relating to the negligent or intentional acts of Licensee, its agents, employees, and independent contractors arising out of or in connection with the use of the Licensed Software by Licensee.

13. TRADEMARK: Licensee hereby acknowledges Licensor's ownership of all right, title and interest in the trademark and name "PROPworks" and all other trademarks, service marks and copyrights of Licensor

Copyright © 1993-2017 Amadeus Airport IT Americas, Inc. All rights reserved

associated with the Products. Licensee further acknowledges that it shall acquire no ownership, license, or other interest therein by virtue of this Addendum or the performance by Licensee of its duties and obligations hereunder.

14. GENERAL:

(a) Licensee is solely responsible for reporting and paying any taxes (including sales or use taxes, and property and intangible taxes) resulting from Licensee's acceptance of this license and Licensee's possession and use of the Licensed Software or any equipment or operating system software provided or furnished under this Addendum. Licensor reserves the right to have Licensee pay any such taxes to Licensor as they fall due for remittance to the appropriate authority. Licensee agrees to hold Licensor harmless from all liability arising from Licensee's failure to report or pay such taxes.

(b) The parties hereby agree and consent that (i) exclusive venue for any legal action authorized or brought hereunder, or brought by either party against the other whether based in contract, tort, breach of warranty or promise, or other theory under law or equity, shall be in Orange County, Florida, and that (ii) personal jurisdiction of the parties shall be vested exclusively in the Circuit Court in Orange County, Florida.

(c) This Addendum shall be governed by and construed in accordance with the laws of the State of Florida, without recognition of conflict of law decisions.

(d) No modification of this Addendum shall be binding unless it is in writing and signed by an authorized representative of the party against whom enforcement of the modification is sought.

(e) Any notice required or permitted under this Addendum shall be in writing and delivered in person or sent by certified mail, return receipt requested, with proper postage affixed.

(f) In the event that any of the terms of this Addendum are or become, or are declared to be, invalid or void, they shall be deemed severed from this Addendum and all the remaining terms of this Addendum shall remain in full force and effect.

(g) This Addendum and the Agreement are the complete and exclusive statements of Licensor's obligations and responsibilities to Licensee and supersedes any other proposal, representation, or other communication by or behalf of Licensor relating to the subject matter hereof. Licensee's use of the Licensed Software shall not commence until Licensee has executed the Agreement, this Addendum, and an authorized representative of Licensor has received, approved, and executed a copy of this Addendum as executed by Licensee. In the event of a conflict in the terms of this Addendum and the Agreement, the Agreement shall control and govern.

(h) In the event either party brings suit to enforce the provisions of this Addendum, the Court shall have the right to award reasonable attorneys' fees to the prevailing party.

Copyright © 1993-2017 Amadeus Airport IT Americas, Inc. All rights reserved

Phoenix-Mesa Gateway Airport Authority
5835 S Sossaman Road
Mesa, Arizona 85212-6014
www.gatewayairport.com

Board Action Item

Re: Resolution 21-24

To:	**Board of Directors**
From:	**R. J. Draper, P.E., LEED AP, CM, Engineering & Facilities Director**
Through:	**Scott Brownlee, Deputy Director/COO**
	J. Brian O'Neill, A.A.E., Executive Director/CEO
Subject:	**Cell Phone-TNC & Terminal Employee Parking Lots – CIP 1098 – Ace Asphalt**
Date:	**June 15, 2021**

Proposed Motion
To authorize paving services with Ace Asphalt of Arizona, Inc. for the new Cell Phone-TNC and Terminal Employee Parking Lots Project CIP 1098 in an amount not to exceed $604,733.79.

Narrative

Due to the increase in passenger traffic at the Phoenix-Mesa Gateway Airport, staff recommend that we construct two new parking lots to alleviate the current employee parking impacts at the Terminal Daily Lot. The current Cell Phone-TNC Lot will be relocated to the southwest corner of Ray and Sossaman and then this lot will be converted to a Terminal Employee Parking Lot. The relocation of the Cell Phone-TNC Lot will allow greater functional use of the existing lot, while providing an adequate space for customers waiting to pick-up passengers, and for TNC vehicle staging. The construction of a new Terminal Employee Parking Lot will alleviate parking impacts at the Terminal Daily Lot by providing more parking options for our customers and it will help increase our parking revenue. This project will include, but would not be limited to clearing, grubbing, concrete removal, fencing, grading, paving, striping, safety curbs, sidewalk, curb, concrete foundation, sign installation, electrical and landscaping.

PMGAA and Ace Asphalt are both participants of the Mohave Educational Service Cooperative (MESC) Purchasing Group. Under MESC, Ace Asphalt was awarded the Paving Contract #19P-ACE-0318, and it is through this competitive selection that PMGAA will utilize Ace Asphalt for paving services. This contract is available upon request.

A quote was obtained utilizing the MESC pricing as noted below:

Ace Asphalt of Arizona, Inc. $604,733.79

Fiscal Impact
This project is included in the FY21 capital budget under CIP 1098 using Non-grant funding.

Attachment(s)
Proposal

RESOLUTION NO. 21-24

WHEREAS, the Phoenix-Mesa Gateway Airport Authority ("Authority"), a joint powers airport authority formed pursuant to Arizona Revised Statute §28-8521 *et seq.* owns and operates the Phoenix-Mesa Gateway Airport ("Airport"); and

WHEREAS the Authority desires to authorize paving services with Ace Asphalt of Arizona, Inc. for the new Cell Phone-TNC and Terminal Employee Parking Lots Project CIP 1098 in an amount not to exceed $604,733.79.

NOW, THEREFORE, BE IT RESOLVED by the Board of Directors of the Authority as follows:

> **The Board of Directors of the Authority hereby authorizes paving services with Ace Asphalt of Arizona, Inc. for the new Cell Phone-TNC and Terminal Employee Parking Lots Project CIP 1098 in an amount not to exceed $604,733.79. This resolution also authorizes the Chair or Executive Director/CEO to make such additions, deletions and changes as may be approved by the Chair or Executive Director/CEO, necessary to carry out the purposes and intent of this Resolution.**

Passed and adopted by the Authority this 15th day of June, 2021.

Gail Barney, Chair

ATTEST:

Misty Johnson, Clerk of the Board

APPROVED AS TO FORM:

Jill Casson Owen, Attorney

BAI = 2021-0215

We're on it.

Arizona | California | Colorado | Nevada | New Mexico | Texas

May 18, 2021

SUBMITTED TO:
Phoenix Mesa Gateway Airport
Rich Adams

480-988-7520
6263 S Taxiway Cir
Mesa, AZ 85212

WORK TO BE PERFORMED AT:
Phx Mesa Gtway New Cell Lot
6100 South Sossaman Road
Mesa, AZ 85212

SUBMITTED BY:
Tad Peters
Account Executive

P: 602-320-6366
F:
E: peterst@aceasphalt.com

3030 South 7th St
Phoenix, AZ 85040

MOHAVE EDUCATIONAL SERVICE CO-OP BID

CONTRACT NUMBER: 19P-ACE-0318
SPECIAL NOTE:
The terms and conditions of Mohave Educational Services Co-Op Bid, Contract Number 19P-ACE-0318 will prevail over any and all terms and conditions stated in the proposal.
Prices are valid until June 30th, 2021.

SCOPE OF WORK

HEAVY MAINTENANCE: CELL LOT

Bid Scope:

Move Ins: (1) Demo/Concrete (1); Subgrade/ABC/Pave (1)

Dust Permit

Water Meter

Barricades (Ace Scope Only)

Install Track Out Rock

Install Straw Waddles

Saw Cut 3" Thick Asphalt as Necessary

Move Cuts to Fills, Assumed 12" Across Site

Fine Grade for Curb (150 Linear Feet)

Form and Pour Single Curb (150 Linear Feet)

Form and Pour Concrete Light Pole Bases (3 Each)

Install Rip Rap over Filter Fabric (10,170 Square Feet)

Furnish and Install New Milbank #CP-16DMNT-CALT Pedestal Base (1 Each)

Furnish and Install New Milbank #CP3B11115A22 Pedestal Per Note 16 on Page 5 (1 Each)

Furnish and Install New Light Poles (3 Each)

Furnish and Install New Heads Per Note 15 Page 5 (5 Each)

Install 1" PVC Conduit per E100 use Rigid 90's Per E101

Furnish and Install #10 THHN Wire Per Note 13 Page 4

Furnish and Install 2.5 Conduit for SPR in 2 Locations per SRP Drawings

Hand Dig Work Pit 4' x 4' x 4' by Existing SRP Transformer to Install 2.5 Conduit 90 (SRP to Install Customer Provided 2.5 Conduit 90)

Fine Grade and Compact Subgrade (54,000 Square Feet)

Place 4" Thick ABC (54,000 Square Feet)

Fine Grade and Compact ABC (54,000 Square Feet)

Pave 2.25" Thick Asphalt (54,000 Square Feet)

Relocate Concrete Barriers (4 Each)

Relocate Decorative Boulders (56 Each)

EXCLUSIONS, EXCEPT AS NOTED ABOVE: Bonds, Permits, Material Taxes, Project Engineering, Survey and Layout Staking, Repair of Irrigation, Landscaping, Private Locators, Gate Loops, Weekend Work, Concrete, Signs, Speed Bumps, Subgrade Stabilization, Import/Export, Over Excavation, Handling and Haul off of Spoils Generated by Others, Protection of Concrete After Initial Placement, Colored Concrete, Decorative Concrete, Rebar, Fibers, Wire Mesh, Dowels, Imbeds, Footings, Masonry, Caulking, Truncated Domes, Asphalt Patch Back, Fence, Testing, Utility Adjustments, Wheel Stops, Utility Company Charges, Roof Penetration Repairs, Patching and Painting, Specialty Fire Seal, Fire Alarm/Security Systems, Communication/Data Wiring, Drywall Repair, Existing Code Violations, Energized Work.

Proposal is valid only if signed and returned prior to 6/10/21.

Due to volatile materials pricing beyond our control, this scope of work is required to be completed by 12/31/2021. If for any reason this scope of work is not completed by 12/31/2021, then additional funds may be required.

Ace is not liable for drainage on projects with less than 1% fall. Due to existing conditions and matching elevations of concrete curbs, buildings and/or asphalt, we may not be able to raise or lower elevations in order to achieve proper slope to prevent standing water, therefore ponding of water may occur.

Ace Asphalt is not liable for damage to underground utilities not located by the owner prior to the start of work.

Due to the existing condition of asphalt on this project, it is reasonable to believe that wet subgrade soils may be present. The extent of this saturation (if any) cannot be completely assessed without removal of the existing asphalt surface. Should the subgrade be saturated, available solution alternatives will be proposed and additional funds and/or construction time may be required by the client to correct the saturation concerns.

Bid is based on existing asphalt being 3" thick, without fabric. If the existing asphalt varies from this thickness or fabric is encountered then the client may need to authorize additional funds.

Bid is based on existing concrete being 12" thick, with rebar. If the existing concrete varies from this thickness then the client may need to authorize additional funds.

Bid includes move-ins as listed above. Additional move-ins may require additional funds.

Work area is to be unobstructed prior to mobilization.

Quote is based on sales notes.

STRIPE CELL LOT

Cell Phone/TNC/Taxicab Lot - 5835 S Sossaman Rd., Mesa

Layout and stripe per plans and return 30 days later and restripe as

existing in one (1) coat paint

Quote is based on detail sheet C102

Quote is ONLY for on site striping shown on detail sheet C102.

No Fire Lane paint or signs

New Asphalt - one coat paint

Stall lines/Lane Divider (white) - 3,206 LF

Arrows - 3 (white)

2' stencils: "Taxi Only" - 1, "Exit" - 2 = 16 letters

Return 30 days later and restripe as existing

Stall lines/Lane Divider (white) - 3,206 LF

Arrows - 3 (white)

2' stencils: "Taxi Only" - 1, "Exit" - 2 = 16 letters

Mobilizations: 1 intital stripe, 1 re-stripe

TESTING ALLOWANCE CELL LOT

This is an allowance for proctors, subgrade compaction testing, ABC compaction testing and asphalt compaction testing

HEAVY MAINTENANCE EMPLOYEE LOT

Bid Scope:

Move Ins: (1) Demo/Concrete (1); Subgrade/ABC/Pave (1)

Dust Permit

Water Meter

Barricades (Ace Scope Only)

Install Trackout

Saw Cut 3" Thick Asphalt as Necessary

Demolish Existing Fence (30 Linear Feet)

Demolish Existing 12" Thick Concrete (3,034 Square Feet)

Haul Off 12" Thick Concrete (3,034 Square Feet)

Demolish Existing Base Material (59,066 Square Feet)

Haul Off 6" Thick Demolished Base Material (59,066 Square Feet)

Fine Grade for Curb (30 Linear Feet)

Fine Grade for Concrete Flatwork (400 Square Feet)

Form and Pour Single Curb (30 Linear Feet)

Form and Pour 4" Thick Concrete (400 Square Feet)

Install 4" Bollards (5 Each)

Install Power and Conduit per E100

Furnish and Install New In-ground J-box per E100 and C102

Pull New Wire from Building 568 to New Access Island per E100

Furnish and Install LV Cabling Per E101 (Equipment Installed by Others)

Install 4' Tall Galvanized Chain Link Fence with No Gates (45 Linear Feet)

Install FAAC Barrier Arm Operators per Specifications (2 Each)

Battery Backups (2 Each) (Design for (1) battery Backup in a Separate Box Per Drawings is not Correct for Specified Operators.) Bid is per Specs

Sawcut and Seal Loops into Asphalt (4 Each)

Fine Grade and Compact Subgrade (62,100 Square Feet)

Place 4" Thick ABC (62,1000 Square Feet)

Fine Grade and Compact ABC (62,100 Square Feet)

Pave 2.25" Thick Asphalt (62,100 Square Feet)

Patch Back 3" Thick Asphalt (170 Square Feet)

EXCLUSIONS, EXCEPT AS NOTED ABOVE: Bonds, Permits, All Taxes, Project Engineering, Survey and Layout Staking, Repair of Irrigation, Landscaping, Private Locators, Gate Loops, Weekend Work, Concrete, Signs, Speed Bumps, Subgrade Stabilization, Import/Export, Over Excavation, Handling and Haul off of Spoils Generated by Others, Protection of Concrete After Initial Placement, Colored Concrete, Decorative Concrete, Rebar, Fibers, Wire Mesh, Dowels, Imbeds, Footings, Masonry, Caulking, Truncated Domes, Asphalt Patch Back, Testing, Utility Adjustments, Wheel Stops, Utility Company Charges, Roof Penetration Repairs, Patching and Painting, Specialty Fire Seal, Fire Alarm/Security Systems, Communication/Data Wiring, Drywall Repair, Existing Code Violations, Energized Work.

Proposal is valid only if signed and returned prior to 5/20/20.

Due to volatile materials pricing beyond our control, this scope of work is required to be completed by 8/30/2020. If for any reason this scope of work is not completed by 8/30/2020, then additional funds may be required.

Ace is not liable for drainage on projects with less than 1% fall. Due to existing conditions and matching elevations of concrete curbs, buildings and/or asphalt, we may not be able to raise or lower elevations in order to achieve proper slope to prevent standing water, therefore ponding of water may occur.

Ace Asphalt is not liable for damage to underground utilities not located by the owner prior to the start of work.

Due to the existing condition of asphalt on this project, it is reasonable to believe that wet subgrade soils may be present. The extent of this saturation (if any) cannot be completely assessed without removal of the existing asphalt surface. Should the subgrade be saturated, available solution alternatives will be proposed and additional funds and/or construction time may be required by the client to correct the saturation concerns.

Bid is based on existing asphalt being 3" thick, without fabric. If the existing asphalt varies from this thickness or fabric is encountered then the client may need to authorize additional funds.

Bid is based on existing concrete being 12" thick, with rebar. If the existing concrete varies from this thickness then the client may need to authorize additional funds.

Bid includes move-ins as listed above. Additional move-ins may require additional funds.

Work area is to be unobstructed prior to mobilization.

Quote is based on sales notes.

NOTE: Add Alt to install FD Tomar Strobe Detector on 3" Post (1 ea), Install KNOX FD Switch on Dual Height Pedestal (1 ea), Provide New UPS Per E101 (specs would need to be provided) ADD $ 19,128.

STRIPE EMPLOYEE LOT

Employee Lot - 5835 S Sossaman Rd., Mesa

Layout and stripe per plans and return 30 days later and restripe as

Existing in one (1) coat of paint

Quote is ONLY for the proposed area.....EXCLUDES all other areas.....

Quote is based on detail sheet G102 and C103

Quote is ONLY for on site striping shown on detail sheet C102.

Plans do NOT list amount of red curb nor fire lane signs...

New Asphalt - one coat paint

One Mob Charge

Stall lines (white/yellow) - 3,645 LF

Hash - 1,510 LF

Arrows - 6 (white)

2' stencils: "Exit" - 6 = 24 letters

Install six (6) new HC signs and two (2) van signs on three (3) standard round posts in asphalt (double sided signs)

Install four (4) Motorcycle parking signs (18"x12") on standard round posts in asphalt

Install two (2) Pedestrian Exit signs (18"x12") on existing light poles

Return 30 days later and restripe as existing.....

Stall lines (white/yellow) - 3,645 LF

Hash - 1,510 LF

Arrows - 6 (white)

2' stencils: "Exit" - 6 = 24 letters

TESTING ALLOWANCE EMPLOYEE LOT

This is an allowance for proctors, subgrade compaction testing, ABC compaction testing and asphalt compaction testing

PAYMENT AND PERFORMANCE BOND

At Ace Asphalt, we don't just build surfaces. We build trust. And we look forward to building yours.

TERMS AND CONDITIONS

General Conditions

All surfaces to which material is to be applied shall be in a condition that is similar to the time at which the project was bid. Customer shall notify Ace in advance when the site will be ready for the work to be performed, and shall give free and unobstructed access so that the work to be performed hereunder can be commenced promptly, and that once begun, may be completed without delay. Customer agrees to pay Ace its reasonable charges for delays caused by Customer. Towing of vehicles, if necessary, shall be the responsibility of Customer.

Ace Asphalt is not responsible for making any site conditions or improvements ADA compliant unless directed by the customer to do so. If directed by the Customer, Ace Asphalt will make the recommended changes and additional charges may apply. Ace Asphalt also recommends the use of a certified ADA consultant for site evaluations and recommendations as required by Federal and State laws.

Customer is solely responsible for maintaining its properties in full compliance with the ADA and agrees to indemnify and hold Ace Asphalt harmless from and against any and all liability, claims, damages or expense, including attorneys fees, relating in any way to ADA requirements or issues.

Traffic control will be provided by Ace unless otherwise specified. It shall become the responsibility of Customer to maintain barricades and/or closures if required after Ace's personnel leave the site.

A water supply source shall be furnished by Customer for Ace's use on this project.

Ace does not assume responsibility for any utility lines such as water, electric, sprinkler, etc., which may lie within eighteen inches (18") of the surface. Layouts of locations must be furnished to Ace if such lines are known to exist. Failure to furnish information in this regard will cause Customer to carry responsibility in case of any damage and repairs to such lines.

Customer shall be represented by one spokesperson, who shall have the authority to accept work performed, authorize and sign for any additions or changes desired, and will be available for consultation with Ace's representative.

Customer grants permission to Ace to create photos or videos of the site for use in promotion of its business services.

Taxes are computed for the locality in which the work is performed at the time the project is invoiced. Taxes can be waived, by law, only upon receipt of an exemption certificate that has been properly executed by responsible party to this contract.

Ace reserves the right to submit progress billings to Customer on a weekly, bi-weekly, or monthly basis. Customer agrees to pay progress billings in accordance to our terms and conditions.

Indemnification

Ace maintains adequate insurances and shall indemnify and hold harmless Customer, Owner, and agents and employees of any of them from any claims, damages, losses and expenses arising out of or resulting from performance of the Work to the extent caused by the negligent acts or omissions of Ace or anyone for whose acts Ace may be liable.

Warranty

The work proposed herein is covered by a 30 month warranty on workmanship. Normal wear and tear, abuse, accidental damage, and acts of God are excluded.

Disputes

If Customer objects to any portion of the work, Customer will so notify Ace within seven (7) calendar days, identify the cause of disagreement, and pay when due that portion of the invoice not in dispute. The parties will immediately make every effort to settle the disputed portion of the invoice.

The parties hereby agree that, in any legal action arising from this Agreement, venue for the action may properly be placed in the county of the Ace office that issued this contract. The parties acknowledge that they are hereby voluntarily and knowingly relinquishing and waiving any rights they may have to establishing venue in any other county. This Agreement shall be in accordance with and governed by the laws of the state of Arizona. If

a court finds that any provision of this Agreement is not valid or should not be enforced, that fact by itself will not mean that the rest of this Agreement will not be valid or enforced. Therefore, a court may enforce the rest of the provisions of this Agreement even if a provision of this Agreement may be found to be invalid or unenforceable.

Our Commitment to the Environment

Ace believes in employing sustainable practices that are both socially responsible and commercially sound. From material recycling strategies to pollution prevention initiatives, we are committed to minimizing our environmental impact while improving the well being of the communities we serve.

Confidentiality

The information in this document is privileged and confidential. No part of this document may be reproduced and/or distributed to anyone other than the recipient listed on this document without written permission from Ace.

PRICING

PHASES	
Heavy Maintenance: Cell Lot	$273,018.39
Stripe Cell Lot	$1,425.36
Testing Allowance Cell Lot	$5,000.00
Heavy Maintenance Employee Lot	$277,243.79
Stripe Employee Lot	$4,727.50
Testing Allowance Employee Lot	$5,000.00
Payment and Performance Bond	$7,363.40
SUBTOTAL	$573,778.44
Estimated Tax	$30,955.35
PROPOSAL TOTAL	**$604,733.79**

EXCLUSIONS, UNLESS NOTED ABOVE:
Bonds, testing, engineering, permits, taxes, soil sterilant, caulking/grouting, wire or fiber mesh, dowels, colored concrete, decorative finishes, utility adjustments, or landscaping/landscape irrigation repairs; Correction of drainage issues or pre-existing subgrade deficiencies; Crack seal adjacent to concrete sidewalks and curbing; Single coat sealing applications and cracks over 2" in width are excluded from warranty (per manufacturer specifications); Work performed on weekends may incur an additional charge.

NOTE: According to Arizona Law, any purchase order issued with an aggregate total over $100,000.00 will need to have a payment and performance bond issued for 100% of the work performed. For additional information, please contact Mike Jensen at 602-304-4023.
NOTE: When you decide to accept this proposal, please make your PO out directly to Ace Asphalt of Arizona, Inc., then fax your PO to Mohave Educational Services, Inc. at 928-718-3232 for verification of pricing and to Ace Asphalt at 602-304-2725. The Mohave contract number: 19P-ACE-0318, must appear on your PO. Once Mohave approves the PO for compliance, they will notify Ace Asphalt to proceed with the Work.
Sales Tax may vary based upon completion time of the project and any tax rate changes made by the state, city or county regulations.
TERMS: NET 30 DAYS AFTER COMPLETION OF WORK.
ACCEPTANCE: Ace Asphalt of Arizona, Inc., is authorized to proceed with the work as specified. Payment will be made according to the terms listed above.

Authorized Signature	Title
Print Name	Date
Legal Property Owner Name	Invoice Addressee
Scheduling Contact	Invoice Mailing Address

PROPERTY OF ACE ASPHALT OF ARIZONA, INC.

Ace Asphalt of Arizona, Inc. 19P-ACE-0316
Mohave Contract Pricing
PRICING EFFECTIVE: 4/1/2021 - 6/30/2021

DATE: May 18, 2021
ACCOUNT NAME: Phoenix Mesa Gateway Airport Authority
SITE NAME: New Cell and Employee Lots
PROPOSAL #: 358231 - 80050

Pricing Zone	Apply P&P Bond?
1A	YES

NOTICE: THIS PROPOSAL CONTAINS PROPRIETARY AND CONFIDENTIAL INFORMATION OF ACE ASPHALT OF ARIZONA NC AND SHALL NOT BE USED, DISCLOSED OR REPRODUCED, IN WHOLE OR IN PART, FOR ANY PURPOSE OTHER THAN TO EVALUATE THIS PROPOSAL, WITHOUT THE PRIOR WRITTEN CONSENT OF AN OFFICER OF ACE ASPHALT OF ARIZONA INC.. TITLE IN AND TO THIS DOCUMENT (OR FILE, IF ELECTRONICALLY SUBMITTED) AND ALL INFORMATION CONTAINED HEREIN REMAINS AT ALL TIMES IN ACE ASPHALT OF ARIZONA INC.

SERVICE CATEGORY	WORK ITEM	NOTES	UNITS	QTY	PRICE	MOHAVE ZONE COEFFICIENT	EXTENDED PRICE	VERIFIED?
CELL LOT								
ASPHALT_SAWCUTTING	Mobilization Charge		PER	1	$ 48.988	1.000	$ 48.99	Yes!
ASPHALT_SAWCUTTING	Charge per linear foot times thickness in inches		PER	400	$ 0.292	1.000	$ 116.80	Yes!
DEMO_HAUL_ASPHALT_DIRT_ETC	Mobilization Charge		PER	1	$ 255.821	1.000	$ 255.82	Yes!
DEMO_HAUL_ASPHALT_DIRT_ETC	Charge per cubic yard of material	Assume 25 Loads of Haul Off	PER	300	$ 37.974	1.000	$ 11,392.20	Yes!
SITE_GRADING	Mobilization Charge (over 3200 cubic yards)	Cuts and Fills	PER	1	$ 2,001.759	1.000	$ 2,001.76	Yes!
SITE_GRADING	Charge per cubic yard (over 3200 cubic yards)	Assumed one foot of cut and fill across site	PER	3249	$ 4.183	1.000	$ 13,590.57	Yes!
FINE_GRADE_AREA	Mobilization Charge		PER	1	$ 767.463	1.000	$ 767.46	Yes!
FINE_GRADE_AREA	Charge per square yard		PER	7130	$ 1.527	1.000	$ 10,887.51	Yes!
OTHER_RATES	Labor and equipment rate, $ per man hour	Supervision - Demo / Rough Grade	PER	8	$ 96.600	1.000	$ 772.80	Yes!
CONCRETE_SINGLE_CURB	1-200 linear feet		PER	150	$ 20.242	1.000	$ 3,036.30	Yes!
FINE_GRADE_AREA	Mobilization Charge		PER	1	$ 767.463	1.000	$ 767.46	Yes!
Materials for Bases	Sonotube, Conduit, Templates and Concrete		PER	1	$ 2,150.000	1.000	$ 2,150.00	Yes!
OTHER_RATES	Labor and equipment rate, $ per man hour	Labor and Equipment for Bases	PER	24	$ 96.600	1.000	$ 2,318.40	Yes!
OTHER_RATES	Labor and equipment rate, $ per man hour	Supervision - Concrete	PER	8	$ 96.600	1.000	$ 772.80	Yes!
DEMO_HAUL_ASPHALT_DIRT_ETC	Mobilization Charge	Boulder / K Rail Relocation	PER	2	$ 255.821	1.000	$ 511.64	Yes!
OTHER_RATES	Labor and equipment rate, $ per man hour	Boulder / K Rail Relocation	PER	72	$ 96.600	1.000	$ 6,955.20	Yes!
GEOTEXTILE_FABRIC_UNDERLAYMENT_FOR_ASPHALT_CONCRETE_OVERLAY	Mobilization Charge	Rip Rap Area	PER	1	$ 350.559	1.000	$ 350.56	Yes!
GEOTEXTILE_FABRIC_UNDERLAYMENT_FOR_ASPHALT_CONCRETE_OVERLAY	Charge per square foot (ADD TO PAVING PRICE ABOVE)	Rip Rap Area	PER	10170	$ 0.242	1.000	$ 2,461.14	Yes!
GRADE_AND_PLACE_ABC	Mobilization Charge	Rip Rap Area	PER	1	$ 472.638	1.000	$ 472.64	Yes!
GRADE_AND_PLACE_ABC	Charge per square foot times thickness in inches of ABC	4" Rip Rap varied Depth	PER	244080	$ 0.122	1.000	$ 29,777.76	Yes!
FINE_GRADE_AREA	Mobilization Charge	Finegrade Landscape	PER	1	$ 767.463	1.000	$ 767.46	Yes!
FINE_GRADE_AREA	Charge per square yard	Finegrade Landscape	PER	770	$ 1.527	1.000	$ 1,175.79	Yes!
FINE_GRADE_AREA	Mobilization Charge (over 5000 square yards)	Subgrade Prep	PER	1	$ 1,279.186	1.000	$ 1,279.11	Yes!
FINE_GRADE_AREA	Charge per square yard (over 5000 square yards)	Subgrade Prep	PER	6000	$ 1.466	1.000	$ 8,796.00	Yes!
GRADE_AND_PLACE_ABC	Mobilization Charge		PER	1	$ 472.638	1.000	$ 472.64	Yes!
GRADE_AND_PLACE_ABC	Charge per square foot times thickness in inches of ABC (over 45000 square feet)	54000 x 4 Inches	PER	216000	$ 0.099	1.000	$ 21,384.00	Yes!
OTHER_RATES	Labor and equipment rate, $ per man hour	Supervision - Grading	PER	8	$ 96.600	1.000	$ 772.80	Yes!
ASPHALT_CONCRETE_OVERLAY	Mobilization Charge		PER	1	$ 1,160.000	1.000	$ 1,160.00	Yes!
ASPHALT_CONCRETE_OVERLAY	Charge per square foot 2 inch depth (over 50,000 sq ft)		PER	54000	$ 1.033	1.000	$ 55,782.00	Yes!
ASPHALT_CONCRETE_OVERLAY	Charge per square foot 2 inch depth (over 50,000 sq ft)	Additional 1/4 Inch for the 19mm min thickness	PER	6750	$ 1.033	1.000	$ 6,972.75	Yes!

PROPRIETARY AND CONFIDENTIAL: UNAUTHORIZED USE PROHIBITED

ASPHALT_CONCRETE_OVERLAY	Charge per square foot 4 inch depth	Thickened Edge 874 LF	PER	1748	$ 2.084	1.000	$ 3,642.83	Yes!		
OTHER_RATES	Labor and equipment rate, $ per man hour	Supervision - Paving	PER	8	$ 96.600	1.000	$ 772.80	Yes!		
STRIPING	Mobilization Charge	First Coat	PER	1	$ 150.000	1.000	$ 150.00	Yes!		
STRIPING	4" line, charge per linear foot (new layout)		PER	3206	$ 0.169	1.000	$ 541.81	Yes!		
STRIPING	Arrows, charge per each		PER	3	$ 9.538	1.000	$ 28.61	Yes!		
STRIPING	24 inch numbers/letters, charge per each		PER	16	$ 3.323	1.000	$ 53.17	Yes!		
STRIPING	Mobilization Charge	30 Days Later	PER	1	$ 150.000	1.000	$ 150.00	Yes!		
STRIPING	4" line, charge per linear foot (restripe)	30 Days Later	PER	3206	$ 0.131	1.000	$ 419.99	Yes!		
STRIPING	Arrows, charge per each	30 Days Later	PER	3	$ 9.538	1.000	$ 28.61	Yes!		
STRIPING	24 inch numbers/letters, charge per each	30 Days Later	PER	16	$ 3.323	1.000	$ 53.17	Yes!		
Electric Contractor	Site Electric Package	Pass Thru	PER	1	$ 60,394.000	1.000	$ 60,394.00	Yes!		
OTHER_RATES	Labor and equipment rate, $ per man hour	Supervision	PER	24	$ 96.600	1.000	$ 2,318.40	Yes!		
CONSTRUCTION_SURVEY	Non-Registered Surveyor (2 men and equipment), per hour rate	Includes Prestart Topo for Balanced Site	PER	40	$ 200.000	1.000	$ 8,000.00	Yes!		
Testing Allowance	Allowance	Pass Thru	PER	1	$ 5,000.000	1.000	$ 5,000.00	Yes!		
SWWPP Subcontractor	Trackout and Bioseck	Pass Thru	PER	1	$ 7,300.000	1.000	$ 7,300.00	Yes!		
Private Locator	Locate Utilities not marked publicly	Pass Thru	PER	8	$ 140.000	1.000	$ 1,120.00	Yes!		
Vac Truck for Pothole		Non Contract Pass Thru Item	PER	6	$ 250.000	1.000	$ 1,500.00	Yes!	$ 279,443.75	
EMPLOYEE LOT										
DEMO_HAUL_ASPHALT_DIRT_ETC	Mobilization Charge		PER	1	$ 255.821	1.000	$ 255.82	Yes!		
ASPHALT_SAWCUTTING	Mobilization Charge		PER	2	$ 48.988	1.000	$ 97.98	Yes!		
ASPHALT_SAWCUTTING	Charge per linear foot times thickness in inches		PER	375	$ 0.292	1.000	$ 109.50	Yes!		
DEMO_HAUL_ASPHALT_DIRT_ETC	Charge per cubic yard of material	Concrete	PER	112	$ 37.974	1.000	$ 4,253.09	Yes!		
OTHER_RATES	Labor and equipment rate, $ per man hour	Added time for Breaking and Handling Conc.	PER	16	$ 96.600	1.000	$ 1,545.60	Yes!		
ASPHALT_PULVERIZING	Mobilization Charge		PER	1	$ 1,100.000	1.000	$ 1,100.00	Yes!		
ASPHALT_PULVERIZING	Per square foot over 50,001 square feet + mobilization charge		PER	59066	$ 0.050	1.000	$ 2,953.30	Yes!		
DEMO_HAUL_ASPHALT_DIRT_ETC	Charge per cubic yard of material (over 500 cubic yards)		PER	1094	$ 25.363	1.000	$ 27,747.12	Yes!		
FINE_GRADE_AREA	Charge per square yard (over 5000 square yards)		PER	6562	$ 1.466	1.000	$ 9,619.89	Yes!		
FINE_GRADE_AREA	Mobilization Charge		PER	1	$ 767.463	1.000	$ 767.46	Yes!		
FINE_GRADE_AREA	Charge per square yard		PER	80	$ 1.527	1.000	$ 122.16	Yes!		
CONCRETE_SINGLE_CURB	Minimum charge		PER	1	$ 1,266.937	1.000	$ 1,266.94	Yes!		
CONCRETE_FLATWORK	4 inch thick per square foot		PER	400	$ 5.775	1.000	$ 2,310.00	Yes!		
SAFETY_BOLLARDS_PLACED_IN_ASPHALT	4-inch diameter, concrete filled,charge per each		PER	5	$ 338.000	1.000	$ 1,690.00	Yes!		
OTHER_RATES	Labor and equipment rate, $ per man hour	Concrete Supervision / Survey Grade Checking	PER	24	$ 96.600	1.000	$ 2,318.40	Yes!		
SITE_GRADING	Mobilization Charge	Subgrade Prep	PER	1	$ 1,023.284	1.000	$ 1,023.28	Yes!		
SITE_GRADING	Charge per cubic yard	Subgrade Prep	PER	1150	$ 9.423	1.000	$ 10,836.45	Yes!		
FINE_GRADE_AREA	Mobilization Charge		PER	1	$ 767.463	1.000	$ 767.46	Yes!		
FINE_GRADE_AREA	Charge per square yard (over 5000 square yards)		PER	6900	$ 1.466	1.000	$ 10,115.40	Yes!		
GRADE_AND_PLACE_ABC	Mobilization Charge		PER	1	$ 472.638	1.000	$ 472.64	Yes!		
GRADE_AND_PLACE_ABC	Charge per square foot times thickness in inches of ABC (over 45000 square feet)	62100 x 4" Depth	PER	248400	$ 0.099	1.000	$ 24,591.60	Yes!		
FINE_GRADE_AREA	Mobilization Charge		PER	1	$ 767.463	1.000	$ 767.46	Yes!		
FINE_GRADE_AREA	Charge per square yard (over 5000 square yards)		PER	6900	$ 1.466	1.000	$ 10,115.40	Yes!		
OTHER_RATES	Labor and equipment rate, $ per man hour	Supervision	PER	16	$ 96.600	1.000	$ 1,545.60	Yes!		

ASPHALT_CONCRETE_OVERLAY	Mobilization Charge		PER	1	$ 1,160.000	1.000	$ 1,160.00	Yes!		
ASPHALT_CONCRETE_OVERLAY	Charge per square foot 2 inch depth (over 50,000 sq ft)		PER	62100	$ 1.033	1.000	$ 64,149.30	Yes!		
ASPHALT_CONCRETE_OVERLAY	Charge per square foot 2 inch depth (over 50,000 sq ft)	Additional 1/4 inch for the 19mm min thickness	PER	7763	$ 1.033	1.000	$ 8,019.18	Yes!		
ASPHALT_CONCRETE_OVERLAY	Charge per square foot 4 inch depth	Thickened Edge	PER	2504	$ 2.084	1.000	$ 5,218.34	Yes!		
OTHER_RATES	Labor and equipment rate, $ per man hour	Supervision	PER	8	$ 96.600	1.000	$ 772.80	Yes!		
ASPHALT_SURFACE_PATCH	Mobilization Charge	Electrical Trench	PER	1	$ 528.000	1.000	$ 528.00	Yes!		
ASPHALT_SURFACE_PATCH	Charge per square foot	Electrical Trench	PER	255	$ 1.353	1.000	$ 345.02	Yes!		
STRIPING	Mobilization Charge	First Coat	PER	1	$ 150.000	1.000	$ 150.00	Yes!		
STRIPING	4" line, charge per linear foot (new layout)		PER	3645	$ 0.169	1.000	$ 616.01	Yes!		
STRIPING	4" Misc. Hash - Out Striping (new layout)		PER	1510	$ 0.284	1.000	$ 428.84	Yes!		
STRIPING	Arrows, charge per each		PER	6	$ 9.538	1.000	$ 57.23	Yes!		
STRIPING	24 inch numbers/letters, charge per each		PER	24	$ 3.323	1.000	$ 79.75	Yes!		
STRIPING	Handicapped Sign & Post - Single Sided	Motorcycle	PER	4	$ 231.840	1.000	$ 927.36	Yes!		
STRIPING	Handicapped Sign & Post - Single Sided	3 ea 2 Sided H-cap	PER	4.5	$ 231.840	1.000	$ 1,043.28	Yes!		
ADDITIONAL SIGNS	2 Peds On Lite Poles, 2 Van Accessible	Pass Thru	PER	1	$ 425.000	1.000	$ 425.00	Yes!		
STRIPING	Mobilization Charge	Second Coat 30 days later	PER	1	$ 150.000	1.000	$ 150.00	Yes!		
STRIPING	4" line, charge per linear foot (restripe)		PER	3645	$ 0.131	1.000	$ 477.50	Yes!		
STRIPING	4" Misc. Hash - Out Striping (restripe)		PER	1510	$ 0.156	1.000	$ 235.56	Yes!		
STRIPING	Arrows, charge per each		PER	6	$ 9.538	1.000	$ 57.23	Yes!		
STRIPING	24 inch numbers/letters, charge per each		PER	24	$ 3.323	1.000	$ 79.75	Yes!		
Electric Contractor	Site Electric Package	Pass Thru	PER	1	$ 31,345.000	1.000	$ 31,345.00	Yes!		
OTHER_RATES	Labor and equipment rate, $ per man hour	Supervision	PER	32	$ 96.600	1.000	$ 3,091.20	Yes!		
Fence Subcontractor	Fence / Gate Arms / Loops	Pass Thru	PER	1	$ 28,699.000	1.000	$ 28,699.00	Yes!		
OTHER_RATES	Labor and equipment rate, $ per man hour	Supervision	PER	24	$ 96.600	1.000	$ 2,318.40	Yes!		
CONSTRUCTION_SURVEY	Non-Registered Surveyor (2 men and equipment), per hour rate		PER	40	$ 200.000	1.000	$ 8,000.00	Yes!		
Testing Allowance	Allowance	Pass Thru	PER	1	$ 5,000.000	1.000	$ 5,000.00	Yes!		
			PER							
SWWPP Subcontractor	Trackout and Biosock	Pass Thru	PER	1	$ 3,025.000	1.000	$ 3,025.00	Yes!		
Private Locator	Locate Utilities not marked publicly	Pass Thru	PER	12	$ 140.000	1.000	$ 1,680.00	Yes!		
Vac Truck for Pothole		Non Contract Pass Thru Item	PER	10	$ 250.000	1.000	$ 2,500.00	Yes!	$ 286,971.23	
						SUBTOTAL	$ 566,415.04			
						Payment & Performance Bond	1.3%	$ 7,363.40		
						TOTAL DUE	$ 573,778.44			

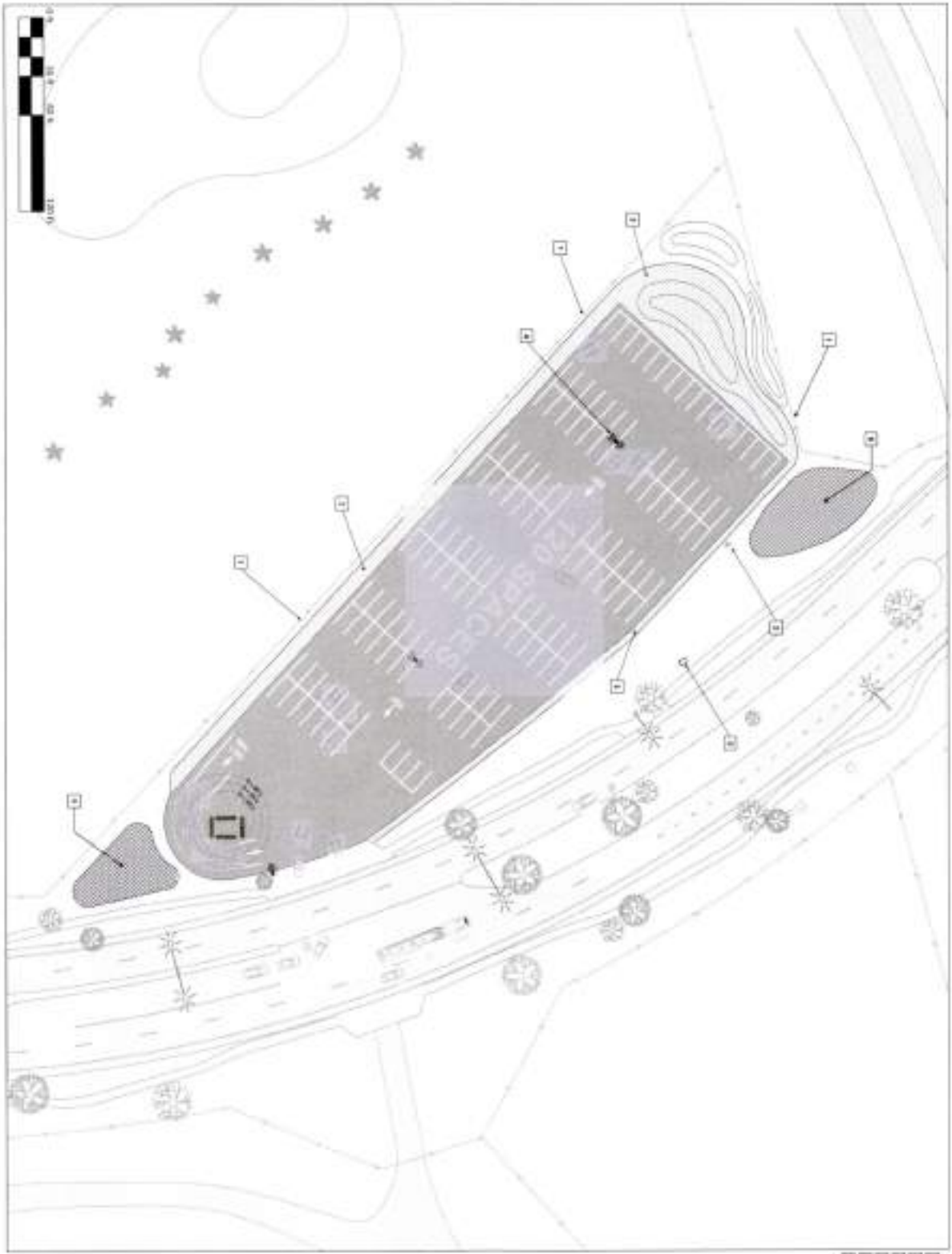

G102	PROJECT NAME	Phoenix-Mesa Gateway Airport	SCALE	FINAL	
	CELL / TNC / TAXICAB LOT	PHOENIX-MESA GATEWAY AIRPORT AUTHORITY	1" = 60'		
	SITE LAYOUT	5835 SOUTH SOSSAMAN ROAD	Date		
		MESA, ARIZONA 85212	Designed by		
		(480) 988-7600	Drawn by	MJH	
		www.gatewayairport.com	Reviewed by	RJA	

REV.	DATE	DESCRIPTION

Phoenix-Mesa Gateway Airport Authority
5835 S Sossaman Road
Mesa, Arizona 85212-6014
www.gatewayairport.com

Board Action Item

Re: Resolution 21-25

To:	**Board of Directors**
From:	**Matt Nebgen, Gateway Aviation Services Director**
Through:	**Scott Brownlee, Deputy Director/COO**
	J. Brian O'Neill, A.A.E., Executive Director/CEO
Subject:	**FY 22 Purchase of Jet-A and 100LL Avgas**
Date:	**June 15, 2021**

Proposed Motion
To authorize the purchase of Jet A fuel and 100LL Avgas from Ascent Aviation (World Fuel) for Airport Authority resale for Fiscal Year 2022 in the amount not to exceed $3,006,000.

Narrative
The Phoenix-Mesa Gateway Airport Authority (PMGAA) owns and operates Gateway Aviation Services, the airport's sole provider of retail aviation fuel.

Jet-A and 100LL Avgas are needed to provide aircraft fuel to tenant, transient, corporate, flight school, airline and military customers. Actual cost of fuel is based upon market price at time of order, therefore, staff is estimating the fuel purchase needed for FY22 will be $3,006,000.

Request for Proposals No. 2019-05 was issued in 2018, and World Fuel was selected as the airport's fuel provider. Board Resolution No. 19-10 approved a multi-year contract between PMGAA and World Fuel.

Fiscal Impact
This purchase was included in the FY22 operating budget and is funded under – CGS Jet-A and 100LL Avgas budgeted line items.

Attachment(s)
N/A

RESOLUTION NO. 21-25

WHEREAS, the Phoenix-Mesa Gateway Airport Authority ("Authority"), a joint powers airport authority formed pursuant to Arizona Revised Statute §28-8521 *et seq.* owns and operates the Phoenix-Mesa Gateway Airport ("Airport"); and

WHEREAS the Authority desires to authorize the purchase of Jet A fuel and 100LL Avgas from Ascent Aviation (World Fuel) for Airport Authority resale for Fiscal Year 2022 in the amount not to exceed $3,006,000.

NOW, THEREFORE, BE IT RESOLVED by the Board of Directors of the Authority as follows:

> **The Board of Directors of the Authority hereby authorizes the purchase of Jet A fuel and 100LL Avgas from Ascent Aviation (World Fuel) for Airport Authority resale for Fiscal Year 2022 in the amount not to exceed $3,006,000. This resolution also authorizes the Chair or Executive Director/CEO to make such additions, deletions, and changes as may be approved by the Chair or Executive Director/CEO, necessary to carry out the purposes and intent of this Resolution.**

Passed and adopted by the Authority this 15th day of June, 2021.

Gail Barney, Chair

ATTEST:

Misty Johnson, Clerk of the Board

APPROVED AS TO FORM:

Jill Casson Owen, Attorney

Phoenix-Mesa Gateway Airport Authority
5835 S Sossaman Road
Mesa, Arizona 85212-6014
www.gatewayairport.com

Management Information Report

To: Board of Directors
From: Chuck Odom, Chief Financial Officer
Through: J. Brian O'Neill, A.A.E., Executive Director/CEO
Re: February 2021 Financials
Date: June 15, 2021

Attached is the monthly Financials Report for April 2021.

Phoenix-Mesa Gateway Airport Authority
AIRPORT - All Operations P&L
April, 2021

	Month of April 2021				Y-T-D as of April 2021			
	Apr FY20 Actual	Apr FY21 Actual	YOY Variance	B/(W)	YTD FY20 Actual	YTD FY21 Actual	Y-T-D Variance	B/(W)
Aeronautical Operating Revenues								
Aircraft Parking	17,701	24,254	6,553	37%	173,546	190,728	17,182	10%
Fuel Flowage Fees	20,999	52,883	31,884	152%	506,747	568,881	62,134	12%
Landing Fees	35,791	139,767	103,976	291%	1,053,171	1,192,261	139,090	13%
Lease Income Aero	180,638	246,182	65,544	36%	2,506,241	2,257,740	(248,501)	-10%
Fuel Sales	307,089	455,294	148,205	48%	5,129,493	4,485,463	(644,030)	-13%
Services Sold - Aero	155,174	399,451	244,277	157%	3,840,462	4,682,707	842,245	22%
Sub-total Aero Operating Revenues	717,392	1,317,831	600,439	84%	13,209,660	13,377,780	168,120	1.3%
Non-Aeronautical Operating Revenues								
Concessions	9,005	87,950	78,945	877%	689,246	580,671	(108,575)	-16%
Lease Income Non-Aero	102,084	125,322	23,238	23%	996,554	1,082,799	86,245	9%
Parking	32,294	200,506	168,212	521%	2,780,592	2,077,180	(703,412)	-25%
Rental Car Fees	43,720	288,285	244,565	559%	1,641,848	1,218,446	(423,402)	-26%
Svcs Sold - Non Aero	129,479	129,062	(417)	0%	191,359	167,884	(23,475)	-12%
Sub-total Non-Aero Operating Revenues	316,582	831,125	514,543	163%	6,299,599	5,126,980	(1,172,619)	-19%
Total Operating Revenues	**1,033,974**	**2,148,956**	**1,114,982**	**108%**	**19,509,259**	**18,504,760**	**(1,004,499)**	**-5%**
Operating Expenses								
Costs of Goods Sold	91,818	269,200	(177,382)	-193%	3,032,632	2,481,370	551,262	18%
Personnel	717,838	680,050	37,788	5%	7,521,286	7,128,278	393,008	5%
Comm & Utilities	48,187	57,220	(9,033)	-19%	688,494	688,251	243	0%
Contractual Services	430,738	343,023	87,715	20%	4,055,877	3,851,755	204,122	5%
Insurance	35,395	42,742	(7,347)	-21%	440,908	447,858	(6,950)	-2%
Other	1,340	15,240	(13,900)	-1037%	290,229	119,807	170,422	59%
Repair & Maintenance	48,030	51,167	(3,137)	-7%	554,654	449,441	105,213	19%
Supplies & Materials	38,656	59,656	(21,000)	-54%	808,878	612,591	196,287	24%
Air Service Incentives [2,000,000]	0	0	0	0	0	0	0	0
Operating Contingency [2,313,872]	0	0	0	0	0	0	0	0
Total Operating Expenses	**1,412,002**	**1,518,298**	**(106,296)**	-8%	**17,392,958**	**15,779,351**	**1,613,607**	9%
Operating Income (Loss)	**(378,028)**	**630,658**	**1,008,686**	-267%	**2,116,301**	**2,725,409**	**609,108**	29%
	-36.6%	29.3%			10.8%	14.7%		

Depreciation	1,460,359	14,251,010
CARES Act Recovery	1,451,982	
Total-to-Date CARES Act Recovery	20,530,277	CARES Act Fully Drawn

Phoenix-Mesa Gateway Airport Authority
5835 S Sossaman Road
Mesa, Arizona 85212-6014
www.gatewayairport.com

Management Information Report

To: **Board of Directors**
From: **Chuck Odom, Chief Financial Officer**
Through: **J. Brian O'Neill, A.A.E., Executive Director/CEO**
Re: Solicitation Notification
Date: **June 15, 2021**

This report is to provide notification of the active and upcoming solicitations to help ensure compliance with the Phoenix-Mesa Gateway Airport Authority procurement transparency clause. The active activities include the following:

Active/Pending Solicitations

Type Solicitation	Number	Title	Anticipated Contract Award (Board Action)
Invitation for Bid	2021-022-IFB	ATC Communication Radios	June 2021
Request for Proposals	2021-021-RFP	Janitorial Services	July 2021
Request for Qualifications	2021-027-RFQ	Terminal Annex Modernization Design Services	July 2021
Invitation for Bid	2021-017-IFB	Alpha Apron Expansion Phase III	July 2021
Invitation for Bid	2021-025-IFB	Taxiway W Rehabilitation	July 2021
Request for Proposals	2022-001-RFP	Master Developer, Gateway*East*	October 2021

Future Solicitations

Type Solicitation	Number	Title	Scheduled for Release	Anticipated Contract Award (Board Action)
Request for Qualifications	2022-002-RFQ	CMAR for Terminal Annex Modernization	June 2021	September 2021
Request for Proposals	2022-003-RFP	Parking Access Revenue Control System	July 2021	October 2021
Request for Qualifications	2022-004-RFQ	Fabrication and Installation of Signs	August 2021	October 2021

Equipment Disposals

Fiscal year totals from sales of decommissioned / nonworking equipment total $32,406.

If you have any questions about the solicitations or the procurement process, please feel free to contact me at 480-988-7613.

NOTICE AND AGENDA OF MEETING OF THE
PHOENIX-MESA GATEWAY AIRPORT AUTHORITY
BOARD OF DIRECTORS

Pursuant to A.R.S. § 38-431.02, notice is hereby given to the members of the Phoenix-Mesa Gateway Airport Authority and to the public that the Phoenix-Mesa Gateway Airport Authority will hold a meeting open to the public on **Tuesday, July 20, 2021 beginning at 9:00 a.m.** in the Board Room (Saguaro A & B) of the Gateway Administration Building, 5835 South Sossaman Road, Mesa, Arizona. Members of the Phoenix-Mesa Gateway Airport Authority may attend either in person or by telephone. The Board may vote to hold an executive session for the purpose of obtaining legal advice from the Board's attorney on any matter listed on the agenda pursuant to A.R.S. § 38-431.03 (A)(3)&(4).

The agenda for the meeting is as follows:

1. **Call to Order** (Mayor John Giles, Chair)
   Members of the Phoenix-Mesa Gateway Airport Authority will attend either in person or via videoconference.

2. **Roll Call** (Mayor John Giles, Chair)

3. **Pledge of Allegiance**

4. **Call to the Public**
   Members of the Board may not discuss items that are not on the agenda. Therefore, action taken as a result of public comment will be limited to directing staff to study the matter or scheduling the matter for further consideration and decision at a later date. Maximum of three minutes per speaker.

5. **Executive Director's Report** - J. Brian O'Neill, A.A.E., Executive Director/CEO

6. **Consent Agenda**

   a) **Minutes** of the Board Meeting held on June 15, 2021.

   b) **Resolution No. 21-26 – Authorizing the purchase of janitorial supplies from Network Services Company** in partnership with **Waxie Sanitary Supply** for FY22, in an amount not to exceed $100,000.

   c) **Resolution No. 21-27 –** Authorizing a contract with **Flagship Airport Services, Inc. (Flagship**) for janitorial services, in an amount not to exceed $2,243,648.69 for three years with two (2) one-year renewal options not to exceed $789,388.37 and $811,096.55 respectively each year.

   d) **Resolution No. 21-28 –** Authorizing the purchase of one backhoe from **Bingham Equipment Company**, in an amount not to exceed $59,421.02.

   e) **Resolution No. 21-29 –** Authorizing additional paving services with **Ace Asphalt of Arizona, Inc**. **(Ace Asphalt)** be added to the previous Board Approved North Remote Aircraft Parking Apron Project under CIP 1229, in an amount not to exceed $53,721.

Consideration and Possible Approval of:

7. **Resolution No. 21-30 –** Approving a Construction Contract with **Combs Construction Company, Inc. (Combs Construction)** for the construction of the Alpha Apron Expansion Phase III utilizing

Passenger Facility Charge (PFC) funds in an amount not to exceed $8,512,421.73 under CIP 719 and approve an additional $2,900,000 increase to the FY22 Capital Budget due to increased construction costs.

8. **Resolution No. 21-31 –** Approving an Authorization of Services for Alpha Apron Expansion Phase III Construction Administration Services with **Kimley-Horn and Associates (KHA)** in an amount not to exceed $247,709.50 under CIP 719

9. **Resolution No. 21-32 –** Authorizing a contract with **DWL Architects + Planners, Inc. (DWL)** for Terminal Annex Modernization Design Services, in an amount not to exceed $948,243 under CIP 1201, and to approve bringing this Terminal Annex Modernization Design and Construction Project (CIP 1201) forward to be included in the FY22 Capital Budget in the amount of $12,122,000.

10. **Board Member Comments/Announcements**

11. **Next Meeting: Tuesday, September 21, 2021 at 9:00 a.m.**

12. **Adjournment**

Persons with a disability may request a reasonable accommodation, such as a sign language interpreter, by contacting Misty Johnson at 480-988-7607 or mrjohnson@gatewayairport.com. Requests should be made as early as possible to allow time to arrange the accommodation.

Phoenix-Mesa Gateway Airport

Executive Director's Report

July 2021

Financial Snapshot

OPERATING INCOME	May		Month Variance	FYTD Comparison		FYTD Variance
	FY20	FY21		FY20	FY21	
Revenues	$1,316,194	$2,082,068	$765,874	$20,825,452	$20,586,680	($238,772)
Less Expenses	$1,588,863	$2,185,087	$596,224	$18,981,821	$17,976,312	($1,005,509)
Operating Income *(before depreciation)*	**($272,669)**	**($103,019)**	**$169,650**	**$1,843,631**	**$2,610,368**	**$766,737**

Investment Fund Balances: As of May, Local Governmental Investment Pool (LGIP) 700 = $19,070,925; Wells Fargo; Collateralized Money Market = $7,645,110 and Collateralized CD's = $28,047,215; Total $54,763,250. PMGAA investments earned a net of $24,118 during the month.

Finance and Accounting

Phoenix-Mesa Gateway Airport Authority (PMGAA, Authority) reported a net operating loss of $103,019 for the month of May. While the May 2021 financials were an improvement over last May, the monthly results would have been much stronger without the impact of a commission paid to a commercial real estate broker for attracting a tenant that leased approximately 15-acres at the north end of Phoenix-Mesa Gateway Airport (Airport, Gateway Airport).

For fiscal-year-to-date (FYTD) 2021, PMGAA reported a net operating income of $2,610,368, a 42% increase compared to the same period last fiscal year.

FYTD21 operating revenues are within 1% of FYTD20 operating revenues, and expenditures for this fiscal year are down more than 5% due to cost-saving measures and tighter fiscal controls.

PMGAA completed all submissions for the $20.5 million Coronavirus Aid, Relief, and Economic Security (CARES) Act operating grant and has transitioned to the $4.2 million Coronavirus Response and Relief Supplemental Appropriations Act (CRRSAA) operating grant. The reimbursements are not reflected in PMGAA's operating results.

PMGAA Solicitations

Active/Pending Solicitations

TYPE OF SOLICITATION	Number	Title	Anticipated Contract Award
Request for Proposals	2021-021-RFP	Janitorial Services	July 2021
Request for Qualifications	2021-027-RFQ	Terminal Annex Modernization Design Services	July 2021
Invitation for Bid	2021-017-IFB	Alpha Apron Expansion Phase III	July 2021
Request for Qualifications	2022-002-RFQ	CMAR Terminal Annex Modernization	September 2021
Request for Proposals	2022-001-RFP	Master Developer for Gateway***East***	October 2021

Future Solicitations

TYPE OF SOLICITATION	Number	Title	Scheduled for Release
Invitation for Bid	2022-004-IFB	Taxiway W Rehabilitation	July 2021
Request for Proposals	2022-003-RFP	Parking Access Revenue Control System	July 2021
Request for Qualifications	2022-005-RFQ	Fabrication & Installation of Signs	August 2021

Airport Operations

It's Been a Busy Summer for the U.S. Forest Service's Mesa Base

Hot, dry, and breezy weather conditions have resulted in a significant number of large wildfires that continue to burn across Arizona. The dedicated men and women assigned to the U.S. Forest Service's (USFS) Mesa Base have been extremely active completing a record number of daily sorties to strategically deploy slurry retardant to stop the fires, protect property, and save lives.

PMGAA, through its Gateway Aviation Services (GAS) Department, is proud to be playing a small part in combatting these fires by providing aviation fuel for the numerous firefighting aircraft stationed at Gateway Airport. In June alone, GAS pumped almost one million gallons of fuel into USFS aircraft.

PMGAA, and its Member Communities of Mesa, Phoenix, Gilbert, Queen Creek, Gila River Indian Community, and Apache Junction would like to thank the brave men and women of the USFS and their contractors for their tireless commitment during this year's very active fire season!

Welcome Back to our Canadian Airline Partners Swoop and WestJet

Great News! Low-cost Canadian airlines Swoop and WestJet are returning to Gateway Airport this winter. Many second homes in greater Phoenix are owned by Canadians who spend their winters in the Valley and summers up in Canada. Swoop plans to begin nonstop service to Edmonton in September, and Winnipeg and Toronto in early November. WestJet will launch its nonstop Calgary service at the end of October.

Operations Statistics

PASSENGER COUNTS		May		% Change	FYTD		% Change
		FY20	FY21		FY20	FY21	
Passengers	TOTAL	**51,635**	**111,959**	**117%**	**1,338,571**	**1,105,288**	**-17%**
	Deplaned	24,102	53,550	122%	670,388	555,559	-17%
	Enplaned	27,533	58,409	112%	668,183	549,729	-18%
Allegiant	Scheduled	51,635	107,606	108%	1,305,276	1,095,630	-16%
WestJet	Scheduled	0	0	0%	8,763	0	-100%
Swoop	Scheduled	0	0	0%	23,892	1,698	-93%
Avelo	Scheduled	0	3,493	100%	0	3,493	100%
Elite/Swift	Charter	0	860	100%	640	4,467	597%

OPERATIONS	May		% Change	FYTD		% Change
	FY20	FY21		FY20	FY21	
Air Carrier	614	1,020	66%	10,878	11,271	4%
Military	187	567	203%	2,948	4,303	46%
General Aviation	18,640	19,046	2%	241,726	224,140	-7%
TOTAL	**19,441**	**20,633**	**6%**	**255,552**	**239,714**	**-6%**

PMGAA Team Member Spotlight

Employee Name: John Linton

Employee Title: Line Services Specialist

PMGAA Department: Gateway Aviation Services (FBO)

Years with PMGAA: 15+

What are your job responsibilities for PMGAA? I perform a wide variety of aircraft fueling, ground handling, and other aviation-related services. I provide safe, efficient, and high-quality support to aircrews, passengers, airport tenants, corporate customers, and others. I complete daily equipment checks and cover for supervisors when needed.

What is your most memorable Gateway Airport moment? Not sure where to start. I've seen a lot of cool stuff and met some really nice people over the last 15 years! Other than having the Blue Angels stop in for fuel or being an extra in a movie with Jamie Foxx (The Kingdom), I think my most memorable moment is when I was invited to fly in a Boeing 707 Air Tanker to meet up with some Marine Harriers that needed fuel. It's something I'll always remember, and if I forget, I have pictures on my home computer. Lol!

What is something people may not know about you? The only thing I can think of is that I'm very uncomfortable speaking to large groups, but if you put me behind a drum kit with one of my favorite bands, I know without a doubt that I could play in front of 10,000 people!

Engineering and Planning

New Air Traffic Control Tower Becoming More Visible Across Phoenix East Valley

Gateway Airport's new Air Traffic Control Tower (ATCT) now reaches more than 150 feet into the sky and, at this point of construction, has surpassed the existing ATCT by 10%. The 14 levels of precast concrete exterior walls have been completed and work continues on the elevator shaft and interior stairwell. By mid-July, a huge crane will hoist a three-story steel structure weighing 225,000 pounds into place atop the tower. This structure will eventually house various offices, training facilities, and mechanical/electrical rooms. Once the steel structure is securely in place, a tower cab, where the air traffic controllers perform their duties, will then be lifted into place. When finished, the new ATCT will be an impressive 190 feet tall.

PMGAA Terminal Modernization Project Will Add Capacity and Improve Airside Facilities

For more than a decade, Gateway Airport has experienced a period of tremendous growth and change. To stay ahead of the increasing popularity of the Airport, PMGAA is planning infrastructure and facility improvement projects designed to ensure that its customers will continue to have a positive travel experience. The next project under consideration is the replacement of the terminal annex, a temporary four-gate structure (Gates 1-4) that has served the Airport since 2007. PMGAA is proposing to replace the current annex with a new, 4-5 gate facility offering more space and modern amenities. The project also includes the development of an 11th aircraft parking position on the ramp in front of the terminal.

Gateway Aviation Services

FUEL (Gallons)	May			FYTD		
	FY20	FY21	% Change	FY20	FY21	% Change
AvGas	48,413	43,744	-10%	632,455	568,798	-10%
Retail Jet A	36,842	37,216	1%	441,144	426,852	-3%
Contract	270,689	479,178	77%	3,406,526	4,146,857	22%
Commercial	777,807	1,163,525	50%	11,580,188	12,673,270	9%
TOTAL	1,133,751	1,723,663	52%	16,060,313	17,815,777	11%

During the month of May 2021, GAS, the PMGAA-operated FBO, pumped more than 1.7MM gallons of aviation fuel. FYTD, GAS has pumped almost 18 million gallons of aviation fuel.

Community Noise Report

During the month of May 2021, PMGAA received aircraft noise calls from a total of 13 area residents, compared to seven callers during May last year. Noise calls typically decrease during the hot summer months when area residents spend more time indoors with the air conditioning on.

CALLERS	May		FYTD	
	FY20	FY21	FY20	FY21
Total	**7**	**13**	**144**	**158**

AIRCRAFT TYPE	May		FYTD	
	FY20	FY21	FY20	FY21
	Callers	Callers	Callers	Callers
Commercial	2	11	102	74
GA Total	5	1	22	32
Helicopter	0	0	4	30
Military	0	1	16	22
Total	**7**	**13**	**144**	**158**

LOCATION	May		FYTD	
	FY20	FY21	FY20	FY21
Mesa	2	7	68	53
Gilbert	3	4	54	55
Gold Canyon	1	0	3	12
Queen Creek	1	2	8	22
Queen Valley	0	0	5	9
San Tan Valley	0	0	4	1
Apache Junction	0	0	2	0
Chandler	0	0	0	6
TOTAL	**7**	**13**	**144**	**158**

Business Development

Gateway*East* Master Developer Solicitation Process Enters Next Phase

Gateway***East*** is a 400-acre mixed-used development opportunity located on the east side of Gateway Airport adjacent to the expanding State Route 24, Loop 202 San Tan Freeway, and Ellsworth Road. In the first phase of the solicitation process, PMGAA received 12 qualified submittals to a Request for Qualifications (RFQ). The Authority then developed a short list of those submitters that PMGAA felt were the "best fit" for this project. Those four companies (or team of companies) are now participating in a Request for Proposals (RFP) designed to give each submitter the opportunity to articulate and share their vision for overall product mix, timing and phasing of development, and their proposed monetary investment. PMGAA plans to have a master developer selected by the end of 2021.

New Retail Concession Coming to Gateway Airport

In 2019, Paradies Lagadere (Paradies) was awarded the retail concession contract at Gateway Airport. Included in their winning package were several new, upscale retail brands they plan to develop in the Airport's terminal. In 2020, Paradies opened the new Saguaro Mercantile retail store between Gates 7 and 8. This Arizona-themed news and gift shop has been extremely popular with Gateway's customers. Their next project includes replacing The Phoenix with a new Tripadvisor branded establishment. Construction is scheduled for mid-July.

Marketing and Community Relations

PMGAA Board Announces Leadership for FY22

Mayor Giles
Chairman

Councilmember Waring
Vice Chairman

Mayor Peterson
Secretary

Mayor Wilson
Treasurer

PMGAA is a joint-powers authority comprised of the Cities of Mesa, Phoenix, and Apache Junction; the Towns of Gilbert and Queen Creek; and the Gila River Indian Community. An elected official from each Member Community serves on the PMGAA Board of Directors. Leadership of the Board is rotated annually among its six members. For FY22, Mesa Mayor John Giles has been selected Chairman, Phoenix Councilmember Jim Waring Vice Chairman, Gilbert Mayor Bridgette Peterson Secretary, and Apache Junction Mayor Chip Wilson Treasurer.

New Airport Advertising Company Brings National Focus to Gateway Airport

PMGAA recently entered into an agreement with Lamar Airports, an industry leader in airport terminal advertising. Lamar brings a national focus and creative new opportunities to expand traditional airport advertising with a strategic mix of large print formats and interactive displays. Next time you're in the terminal, be sure to check out all the new advertisers at Gateway Airport. Welcome to the family Lamar!

Recent Social Media Posts Promoting Allegiant and Avelo Service at Gateway Airport

MINUTES OF PUBLIC MEETING OF THE
PHOENIX-MESA GATEWAY AIRPORT AUTHORITY
BOARD OF DIRECTORS | June 15, 2021

A public meeting of the Phoenix-Mesa Gateway Airport Authority (PMGAA) was convened on Tuesday, June 15, 2021, beginning at 9:00 a.m. in the Board Room (Saguaro A&B) of the Gateway Administration Building, 5835 S Sossaman Road, Mesa, Arizona.

Members Present

Mayor Gail Barney, Queen Creek
Councilmember Jim Waring, Phoenix (*via videoconference*)
Mayor John Giles, Mesa
Mayor Brigette Peterson, Gilbert (*via videoconference*)
Mayor Chip Wilson, Apache Junction
Lt. Governor Monica Antone, Gila River Indian Community (*via videoconference*)

** Neither present nor represented*

Airport Staff Present

J. Brian O'Neill, Executive Director/CEO
Scott Brownlee, Deputy Director/COO
Chuck Odom, CFO
Misty Johnson, Clerk of the Board
Jill Casson Owen, Attorney

1. **Call to Order** at 9:00 a.m. (Mayor Barney)

2. **Roll Call**

3. **Pledge of Allegiance**

4. **Call to the Public**
   There were no public comments.

5. **Executive Director's Report** J. Brian O'Neill, A.A.E., Executive Director/CEO

   Executive Director O'Neill provided a briefing on PMGAA financial performance, passenger activity, the community noise report, and various Airport projects.
   - Fiscal Year-to-Date (FYTD) Net Operating Income is $2,725,409.
   - Commercial passenger activity at Gateway Airport continues to recover from the COVID-19 pandemic. FYTD21 Gateway Airport is down 23% compared to the same time in FYTD20.
   - Allegiant Air celebrated the inaugural flights of their two newest destinations. The inaugural flight to San Diego, California was on May 27th and the Jackson Hole, Wyoming inaugural flight was on June 2nd. Allegiant has also announced nonstop service to Pittsburgh, Pennsylvania beginning on August 19th.
   - Swoop is planning to return to Gateway Airport for the winter season with nonstop service to Edmonton, Winnipeg and Toronto, Canada beginning in September and continuing through the end of April.
   - WestJet Airlines is planning to return to Gateway Airport for the winter season with nonstop service to Calgary, Canada beginning October 31st and continuing through the end of April.

DRAFT

- Sitework continues for the Gateway Executive Airpark's 183,000 SF hangar complex. This impressive three-hangar project is comprised of both multi-tenant and single tenant lease opportunities. The first two hangars should be operational by the beginning of next year.
- SkyBridge Arizona is progressing with the design phase for its 127-room Wyndham dual-brand hotel along Sossaman Road. The new hotel is scheduled to open during the third quarter of 2022.
- Last week, the second in command for Mexican Customs visited Gateway Airport to learn more about the Unified Cargo Processing Program and to meet with U.S. Customs and Border Protection regarding joint inspection of cargo.
- The U.S. Forest Service-Mesa Base has been actively fighting the Telegraph and Mescal fires east of the airport. They have purchased over 500,000 gallons of aviation fuel during the first two weeks of June. To ensure fulfillment of the anticipated needs of the Airport's commercial, private, and government aviation customers, PMGAA is working with its fuel supplier to increase daily truckload deliveries of aviation fuel.
- The Gateway***East*** Master Developer Solicitation continues. The RFQ process had 12 highly qualified submissions. The top four submissions have been invited to participate in an RFP process. Gateway***East*** is a 400-acre mixed use non-aeronautical master development opportunity located on the east side of the Airport. PMGAA hopes to have a master developer selected by the end of 2021.
- The air traffic control tower contractor has completed the pre-cast concrete exterior walls and is currently working on finishing the elevator shaft and interior walls. The next big milestone will be to lift the 225,000-pound steel structure over the elevator shaft and onto the concrete wall panels. A live link showing a time-lapse of the construction is available on at www.gatewayairport.com/towerconstruction. The tower is scheduled to be operational in Summer of 2022.
- The design phase is currently underway for the Terminal Modernization Project. This 4-5 gate terminal will replace the temporary terminal annex building developed in 2007 when Allegiant Air arrived in Arizona.
- PMGAA is preparing to expand aircraft parking opportunities at the south end of the airfield. Alpha Apron Phase III will begin construction at the end of this year's fire season. Phase IV is in the design process.
- PMGAA is constructing a new remain overnight (RON) pad for four aircraft across the ramp from the commercial passenger terminal. This project will be completed in August.

6. Consent Agenda

a) Minutes of the Board Meeting held on **May 18, 2021.**

b) Resolution No. 21-16 Authorizing the **Denver Series of Lockton Companies, LLC (Lockton)** under the terms of its existing Insurance Broker / Risk Management Consulting Agreement with the Phoenix-Mesa Gateway Airport Authority to purchase specific lines of insurance on behalf of the Authority beginning July 1, 2021 at an aggregate premium cost of $562,585.

c) Resolution No. 21-17 – Authorizing the purchase of radios and ancillary equipment for Air Traffic Control purposes from **Robinson Aviation, Inc**. in an amount not to exceed $359,354.18.

d) Resolution No. 21-18 – Authorizing the purchase of the following equipment from **Frequentis USA, Inc. (Frequentis)** for the new Air Traffic Control Tower (ATCT) in an amount not to exceed

$500,959.55: Voice Switch (iPosa), Voice Recorder (DIVOS), ATIS (Smart ATIS), Back-up Wind/Temp/DP (Wind Display) and GPS NTP Time Source.

e) **Resolution No. 21-19 –** Authorizing an agreement for financial participation between the **City of Mesa** and Phoenix-Mesa Gateway Airport Authority to share state and federal lobbyist and consulting services effective July 1, 2021 in the amount of $106,406.40.

f) **Resolution No. 21-20 –** Authorizing the purchase of international waste management services from **Stericycle, Inc. (Stericycle)** in an amount not to exceed $70,000.00 for fiscal year 2022.

g) **Resolution No. 21-21 –** Authorizing the purchase of Unleaded and Diesel fuel from the lowest priced **State contract vendor** at market prices for Airport Authority use and resale in an amount not to exceed $328,468 to provide fuel for the 2022 fiscal year.

h) **Resolution No. 21-22 –** Approving an Authorization of Services for Alpha Apron Expansion Phase IV Design Engineering Services with **Kimley-Horn & Associates** in an amount not to exceed $294,828.55 under CIP 1231.

i) **Resolution No. 21-23 –** Authorizing a 5-year contract with **Amadeus Airport IT Americas, Inc. (Amadeus)** for PROPworks Support and Maintenance in an amount not to exceed $46,057.53 for three years with (2) one-year renewal options not to exceed $16,282.73 and $16,771.22 each year respectively.

j) **Resolution No. 21-24 –** Authorizing paving services with **Ace Asphalt of Arizona**, **Inc**. for the new Cell Phone-TNC and Terminal Employee Parking Lots Project CIP 1098 in an amount not to exceed $604,733.79.

Mayor John Giles moved to approve the Consent Agenda.
Mayor Brigette Peterson seconded the motion.
The motion was carried unanimously

Consideration and Possible Approval of:

7. **Resolution No. 21-25 –** Authorizing the purchase of Jet A fuel and 100LL Avgas from **Ascent Aviation (World Fuel)** for Airport Authority resale for Fiscal Year 2022 in the amount not to exceed $3,006,000.

Mayor Chip Wilson moved to approve Resolution No. 21-25.
Mayor John Giles seconded the motion.
The motion was carried unanimously

8. **Election of Chair and Vice Chair**

Mayor Chip Wilson motioned to nominate Mayor John Giles to become Chair and Councilmember Jim Waring, to become Vice Chair.
Mayor Brigette Peterson seconded the motion.
The motion was carried unanimously.

9. **Election of Secretary and Treasurer**

Mayor John Giles motioned to nominate Mayor Brigette Peterson to become Secretary and Mayor Chip Wilson, to become Treasurer. Lt. Governor Monica Antone seconded the motion. The motion was carried unanimously.

10. **Board Member Comments/Announcements.**

On behalf of the entire PMGAA Board of Directors, Mayor Wilson presented Mayor Barney with a Chairman's Gift for his leadership as Chairman during FY21.

Mayor Barney said it was a pleasure serving as Chairman this past year and thanked PMGAA Board members and staff for their support and efforts during the challenges of the past twelve months.

Mayor Giles thanked Mayor Barney for his leadership as PMGAA's Chairman of the Board of Directors during FY21 and welcomed the opportunity to become the PMGAA Board Chairman for FY22.

11. **Next Meeting: Tuesday, July 20, 2021** at 9:00 a.m. in the Board Room (Saguaro A&B) of the Gateway Administration Building, 5835 S Sossaman Road, Mesa, Arizona. Members of the Phoenix-Mesa Gateway Airport Authority may attend either in person or by telephone/videoconference.

12. **Adjournment.**
The meeting adjourned at 9:42 a.m.

Dated this _____ day of _____ 2021.

_____
Misty Johnson, Clerk of the Board

Phoenix-Mesa Gateway Airport Authority
5835 S Sossaman Road
Mesa, Arizona 85212-6014
www.gatewayairport.com

Board Action Item

Re: Resolution 21-26

To:	**Board of Directors**
From:	**Margi EvanSon, Operations & Maintenance Director**
Through:	**Scott Brownlee, Deputy Director/COO**
	J. Brian O'Neill, A.A.E., Executive Director/CEO
Subject:	**Network Services Company in partnership with Waxie Sanitary Supply**
Date:	**July 20, 2021**

Proposed Motion
To authorize the purchase of janitorial supplies from Network Services Company in partnership with Waxie Sanitary Supply for FY22, in an amount not to exceed $100,000.

Narrative
Phoenix-Mesa Gateway Airport Authority maintains facilities hosting commercial airline passengers and over 100 employees, as well as general aviation operations and various tenant and office space. Although the passenger activity is not at pre-pandemic levels, it is increasing compared to last year. As part of a health and safety plan to reduce the spread and exposure of COVID-19 for our employees and passengers, the cleaning and frequency has increased, and the cost of janitorial supplies have increased as well. A primary function of the Operations and Maintenance Department is to ensure Airport facilities provide a clean, sanitary, and aesthetically pleasing environment for passengers, visitors, tenants, and staff. Janitorial and sanitary supplies, such as paper products, cleaning solutions, and cleaning tools, are required for health, safety, and satisfaction of customers, visitors, tenants, and employees.

Authorization to purchase janitorial supplies from Network Services Company in partnership with Waxie Sanitary Supply will allow PMGAA to utilize the unit pricing that was competitively bid for janitorial supplies.

PMGAA is a participating member of the Omnia Partners, allowing it to utilize the contract #202329-01 executed by City of Tucson with Network Services Company in partnership with Waxie Sanitary Supply for Janitorial Supplies. This contract is available upon request.

Fiscal Impact
This expenditure was included in the FY22 operating budget and is funded under OPM Supplies & Maintenance: Operating Supplies.

Attachment(s)
Agreement to Use

RESOLUTION NO. 21-26

WHEREAS, the Phoenix-Mesa Gateway Airport Authority ("Authority"), a joint powers airport authority formed pursuant to Arizona Revised Statute §28-8521 *et seq.* owns and operates the Phoenix-Mesa Gateway Airport ("Airport"); and

WHEREAS the Authority desires to authorize the purchase janitorial supplies from Network Services Company in partnership with Waxie Sanitary Supply for FY22, in an amount not to exceed $100,000.

NOW, THEREFORE, BE IT RESOLVED by the Board of Directors of the Authority as follows:

> **The Board of Directors of the Authority hereby authorizes the purchase of janitorial supplies from Network Services Company in partnership with Waxie Sanitary Supply for FY22, in an amount not to exceed $100,000. This resolution also authorizes the Chair or Executive Director/CEO to make such additions, deletions, and changes as may be approved by the Chair or Executive Director/CEO, necessary to carry out the purposes and intent of this Resolution.**

Passed and adopted by the Authority this 20th day of July, 2021.

John Giles, Chair

ATTEST:

Misty Johnson, Clerk of the Board

APPROVED AS TO FORM:

Jill Casson Owen, Attorney

Agreement to Use
City of Tucson Contract #202329-01
via Cooperative Purchasing Agreement #2020 0080

Whereas, the Phoenix-Mesa Gateway Airport Authority (PMGAA) is a member of the OMNIA Partners allowing it to utilize existing contracts entered into by other OMNIA Partners members; and

Whereas, City of Tucson has executed contract 202329-01 with NETWORK Services Company in partnership with WAXIE Sanitary Supply for Comprehensive Operational and Janitorial Supplies Solutions; and

Whereas, PMGAA and NETWORK Services Company in partnership with WAXIE Sanitary Supply desire to utilize the terms and conditions of City of Tucson contract 202329-01, including pricing that was competitively bid.

NOW THEREFORE, in consideration of the payment of fees and the performance by the parties of the mutual covenants and conditions set forth herein, the parties hereby agree as follows:

A. **CONTRACT:** This Agreement incorporates by reference and attachment all the terms and conditions of that certain cooperative purchasing contract 202329-01, between City of Tucson and NETWORK Services Company in partnership with WAXIE Sanitary Supply, except:
   1. All references to City of Tucson shall be replaced with Phoenix-Mesa Gateway Airport Authority;
   2. The contract between NETWORK Services Company in partnership with WAXIE Sanitary Supply and Phoenix-Mesa Gateway Airport Authority is independent of the City of Tucson contract 202329-01.
   3. Billing and Delivery information shall be stated on PMGAA's purchase order(s).
   4. This Agreement to Use shall not obligate PMGAA to purchase goods and/or services until PMGAA issues a purchase order to NETWORK Services Company in partnership with WAXIE Sanitary Supply for such goods/and or services.

   To the extent applicable under Arizona Revised Statutes § 41-4401, the Contractor and its Subcontractors warrant compliance with all federal immigration laws and regulations that relate to their employees and compliance with the E-verify requirements under A.R.S. § 23-214(A). Contractor's or its Subcontractor's failure to comply with such warranty shall be deemed a material breach of this Contract and may result in the termination of this Contract by the Authority.

B. **FEE FOR SERVICES:** The fees to be utilized for this contract shall be as per original bid with City of Tucson, with the following exceptions:
   1. Quantities shall be adjusted to reflect the actual needs of PMGAA and detailed in PMGAA's purchase order issued to NETWORK Services Company in partnership with WAXIE Sanitary Supply.

C. **CONTRACT TERM**

   This Agreement is effective as of June 11, 2020 and shall terminate on May 31, 2023, unless terminated, cancelled, or extended as provided in the original contract between City of Tucson and NETWORK Services Company in partnership with WAXIE Sanitary Supply.

   The approval and continuation of this contract is subject to the availability of funds either provided to, made available to, or appropriated by the Phoenix-Mesa Gateway Airport Authority for this purpose. In the event that funds are not available or appropriated for Phoenix-Mesa Gateway Airport Authority's payment requirements under this contract for the goods and/or services to be provided hereunder the Phoenix-Mesa

Gateway Airport Authority may terminate this contract by providing notice to the contractor of the lack of the availability of funds.

Executed as of the Effective Date.

NETWORK Services Company in partnership with WAXIE Sanitary Supply

By: _____

Name: Amanda Parent

Title: Corporate Account Director

Date: 6/22/2020

PMGAA
PHOENIX MESA GATEWAY AIRPORT AUTHORITY, a joint powers airport authority authorized by the State of Arizona

By: _____

Name: Chuck Odom

Title: CFO

Date: 7/7/2020

Phoenix-Mesa Gateway Airport Authority
5835 S Sossaman Road
Mesa, Arizona 85212-6014
www.gatewayairport.com

Board Action Item

Re: Resolution 21-27

To:	**Board of Directors**
From:	**Margi EvanSon, Operations & Maintenance Director**
Through:	**Scott Brownlee, Deputy Director/COO**
	J. Brian O'Neill, A.A.E., Executive Director/CEO
Subject:	**Airport Janitorial Cleaning Services**
Date:	**July 20, 2021**

Proposed Motion

To authorize a contract with Flagship Airport Services, Inc. (Flagship) for janitorial services, in an amount not to exceed $2,243,648.69 for three years with two (2) one-year renewal options not to exceed $789,388.37 and $811,096.55 respectively each year.

Narrative

The current janitorial services contract will expire as of September 30, 2021.

Authorization of the contract will provide janitorial cleaning services in the Terminal and Airport campus buildings to maintain a clean, sanitary, and safe environment in a cost-effective manner. The janitorial service will provide a high level of customer service in a timely and professional manner using industry standards for janitorial cleaning services.

Request for Proposals 2021-021-RFP for janitorial services for the Airport was issued on March 29, 2021 and advertised in the Arizona Business Gazette on 4/1, 4/8, 4/15 and 4/22/21. In addition, the solicitation was posted on Arizona Airports Association, Southwest American Association of Airport Executives, Airports Council International North America and the Airport's website. It was also emailed to a list of over 30 prospective respondents. The RFP provided for two separate scopes of work to submit proposals for: the terminal building and all other Airport campus buildings. The Airport received eight individual proposals from a total of five companies. Three individual proposals were deemed nonresponsive for not including required information. The Evaluation Panel reviewed and determined the submittal from Flagship best satisfied the requirements for the Airport. Flagship's experience and qualifications in the Janitorial Services industry surpass those of all other submittals received and was unanimously ranked number one by the Panel.

Fiscal Impact

The annual Year 1 is budgeted in the FY22 OPM Operating Budget. Years 2-5 operating costs will be budgeted in the appropriate year.

Attachment(s)

Contract

RESOLUTION NO. 21-27

WHEREAS, the Phoenix-Mesa Gateway Airport Authority ("Authority"), a joint powers airport authority formed pursuant to Arizona Revised Statute §28-8521 *et seq.* owns and operates the Phoenix-Mesa Gateway Airport ("Airport"); and

WHEREAS the Authority desires to authorize a contract with Flagship Airport Services, Inc. (Flagship) for janitorial services, in an amount not to exceed $2,243,648.69 for three years with two (2) one-year renewal options not to exceed $789,388.37 and $811,096.55 respectively each year.

NOW, THEREFORE, BE IT RESOLVED by the Board of Directors of the Authority as follows:

> **The Board of Directors of the Authority hereby authorizes a contract with Flagship Airport Services, Inc. (Flagship) for janitorial services, in an amount not to exceed $2,243,648.69 for three years with two (2) one-year renewal options not to exceed $789,388.37 and $811,096.55 respectively each year. This resolution also authorizes the Chair or Executive Director/CEO to execute such Contract, with such insertions, deletions, and changes as may be approved by the Chair or Executive Director/CEO, necessary to carry out the purposes and intent of this Resolution.**

Passed and adopted by the Authority this 20th day of July, 2021.

John Giles, Chair

ATTEST:

Misty Johnson, Clerk of the Board

APPROVED AS TO FORM:

Jill Casson Owen, Attorney

PHOENIX-MESA GATEWAY AIRPORT AUTHORITY

AND

Flagship Airport Services, Inc.

FOR

JANITORIAL SERVICES

CONTRACT NUMBER 20210200

The Phoenix-Mesa Gateway Airport is owned and operated by the Phoenix-Mesa Gateway Airport Authority (PMGAA), a joint powers airport authority authorized by the State of Arizona and consisting of the City of Mesa, City of Phoenix, City of Apache Junction, Town of Gilbert, Town of Queen Creek and the Gila River Indian Community.

Table of Contents

Section I - Contractor Services	3
Section II - PMGAA Responsibilities	3
Section III - Period of Service	3
Section IV – Key Personnel	4
Section V – Payments to the Contractor	4
Section VI – Alteration in Scope of Services	4
Section VII – Work Assignment Completion	4
Section VIII – Ownership of Documents	4
Section IX – Compliance with Laws	4
Section X – General Considerations	5
Section XI – No Kick-back Certification	5
Section XII – Suspension of Services	5
Section XIII – Times of Payments	5
Section XIV – Timely Review	5
Section XV – Dispute Resolution	5
Section XVI – Liability of Contractor	5
Section XVII – Laws and Regulations	6
Section XVIII – Insurance Requirements	6
Section XIX – Notices	7
Section XX – Lost and Found Items	7
Section XXI – Items Requiring Repair	7
Section XXII – Storage Areas	7
Section XXIII – Liquidated Damages	7
Section XXIV – Security	9
Section XXV – Payroll Records and Labor Certification Report	10

EXHIBIT A - Scope of Services & Fee Schedule	11
EXHIBIT B – Staffing Requirements	25
EXHIBIT C - Compensation	28
EXHIBIT D - Special Provisions	29
EXHIBIT E - PMGAA Standard Terms and Conditions	33
EXHIBIT F - Overview Map of Facilities	38
EXHIBIT G - Minimum Cleaning Frequencies by Facility	39
EXHIBIT H – Contractor's RFP Submittal	42

Phoenix-Mesa Gateway Airport Authority, a joint powers airport authority authorized by the State of Arizona ("PMGAA") desires performance of the services more fully described in this **Contract Number 20210200** ("Contract") and the attached exhibits. Flagship Airport Services, Inc., a California S-Corporation ("Contractor"), with its principal offices located at 2650 south 46th Street, suite 103, Phoenix, Arizona, 85034, desires to perform these services.

Recitals

A. PMGAA requires the services as described in this Contract, including any and all exhibits and amendments, and Contractor is willing to provide these and other services under this Contract; and

B. PMGAA desires to contract with Contractor to provide services as noted herein.

Now therefore, in consideration of the recitals and the mutual covenants set forth below, PMGAA and Contractor agree as follows.

SECTION I – CONTRACTOR SERVICES

The services to be performed by Contractor are specified in this Contract. PMGAA will not pay Contractor for any services that have not been authorized under the Contract. There is no guarantee of a minimum purchase of services.

The anticipated services to be provided by Contractor under this Contract shall generally include, but not be limited to, the following: Janitorial Services, as more specifically described in the detailed scope of services attached as **EXHIBIT A**, "Scope of Services & Fee Schedule."

PMGAA's authorized representative shall be the PMGAA Operations and Maintenance Director, or his/her duly authorized representative, and that he/she shall be the sole contact for administering this Contract.

All services provided by Contractor under this Contract must be performed in a manner consistent with that degree of care and skill ordinarily exercised by members of the same profession currently practicing under similar circumstances in Arizona. Contractor makes no other warranty, expressed or implied.

SECTION II – PMGAA RESPONSIBILITIES

PMGAA shall furnish Contractor, at no cost to Contractor, the following information or services for this Contract:

A. Access to copies of readily available maps, records, as-built drawings, benchmarks or other data pertinent to work assignments affiliated with this Contract. This does not, however, relieve Contractor of the responsibility of searching records for additional information, for requesting specific information or for verification of that information provided. PMGAA does not warrant the accuracy or comprehensiveness of any information or documents provided to Contractor.

B. In PMGAA's discretion and upon Contractor's reasonable request, access to staff for consultation with Contractor during the performance of this contract in order to identify the problems, needs, and other functional aspects of the work.

C. Prompt review of and feedback on Contractor's deliverables. PMGAA will advise Contractor concerning progress of PMGAA's review of the work, as needed.

SECTION III - PERIOD OF SERVICE

Contractor shall complete all work in accordance with the provisions of this Contract as amended.

All work initiated under this Contract must be completed on or before the expiration date of the Contract as amended.

The term of this Contract shall commence on October 1, 2021 and ends on September 30, 2024 ("Base Term") unless terminated, canceled or extended as provided in this Contract.

This Contract has two (2) optional one-year extensions that PMGAA may exercise as its sole discretion. Prior to the expiration of the Contract Base Term, PMGAA may elect to extend the Contract. If PMGAA exercises such right, all terms, conditions and provisions of the original Contract shall remain the same and apply during the extended

period with the possible exception of price. All fees for the optional renewal terms are provided for in **EXHIBIT A**, "Scope of Services & Fee Schedule.". Any extension of this Contract shall require an Amendment signed by both parties.

Contractor shall perform its services in a diligent manner and in accordance with this Contract.

SECTION IV – KEY PERSONNEL

The Contractor itself shall provide all services to be performed under this Contract. If Sub-Contractors are required by Contractor to perform any services listed under this contract, Contractor shall notify PMGAA prior to authorizing work by said Sub-Contractors. PMGAA may, at its sole discretion, accept or reject proposed Sub-Contractors.

SECTION V - PAYMENTS TO THE CONTRACTOR

Contractor will be paid for work performed under this Contract plus any adjustments that have been approved in writing by PMGAA in accordance with PMGAA's Procurement Policy. Payments will be made in accordance with **EXHIBIT C**, "Compensation."

All services to be rendered by Contractor are subject to the terms of **EXHIBIT C**, "Compensation" attached hereto.

PMGAA does not guarantee any minimum or maximum fee during the Term of this Contract, and Contractor, in executing this Contract, shall not anticipate or require any minimum or maximum fee.

SECTION VI - ALTERATION IN SCOPE OF SERVICES

For any alteration in the Scope of Services that would materially increase or decrease the Contract fee, the parties shall negotiate an amendment to the Contract to be executed by PMGAA and Contractor. No work shall commence on any amendment or change until the amendment has been approved by PMGAA and Contractor has been notified to proceed by PMGAA. No claim for extra work done or materials furnished by Contractor will be allowed by PMGAA, except as provided herein, nor shall Contractor do any work or furnish any materials not covered by this Contract unless the work is first authorized in writing by PMGAA and the change complies with PMGAA's Procurement Policy. Any work or materials furnished by Contractor without advance, written authorization will be at Contractor's own risk, cost, and expense. Without written authorization, Contractor shall make no claim for compensation for such work or materials furnished.

SECTION VII - WORK ASSIGNMENT COMPLETION

If, during the Term of this Contract, situations arise which prevent work completion within the allotted time, PMGAA may grant an appropriate time extension.

SECTION VIII - OWNERSHIP OF DOCUMENTS

Any documents, including all electronic copies thereof, prepared under or as a result of this Contract, shall be the property of PMGAA. To the extent necessary to effectuate such ownership, Contractor hereby assigns all right, title and interests to such documents to PMGAA. Contractor shall execute any separate contracts or documents, if any, which may be necessary to implement the terms of this Section.

All of Contractor's documents prepared under this Contract, including electronic files, are instruments of service. All of these documents become the property of PMGAA upon completion of the services and payment in full to Contractor. PMGAA may reuse or modify the documents, as it deems necessary, without Contractor's prior written authorization. PMGAA shall indemnify and hold harmless Contractor, its officers, directors, employees and subcontractors (collectively, the "Contractor") against any and all damages, liabilities or costs arising from PMGAA's modification of documents produced by Contractor under this Contract unless Contractor authorizes the modification in writing.

SECTION IX - COMPLIANCE WITH LAWS

Contractor shall comply with all federal, state and local laws, local ordinances and regulations throughout the Term.

Contractor's signature on this Contract certifies compliance with the provisions of the I-9 requirements of the *Immigration Reform and Control Act of 1986* for all personnel that Contractor and any subcontractors employ to complete any work assignment.

PMGAA shall administer this Contract in accordance with PMGAA's Procurement Policy.

SECTION X - GENERAL CONSIDERATIONS

A. The failure of either party to enforce any of the provisions of this Contract or require performance of the other party of any of the provisions hereof shall not be construed to be a waiver of the provisions, nor shall it affect the validity of this Contract or the right of either party to enforce each and every provision.

B. The fact that PMGAA has accepted or approved Contractor's work shall in no way relieve Contractor of responsibility for the work under this Contract.

C. This Contract shall be governed by the laws of the state of Arizona, both as to interpretation and performance. Any action at law, suit in equity, or judicial proceeding for the enforcement of this Contract, or any provision thereof, shall be instituted only in the courts of the state of Arizona.

D. All exhibits to this Contract and any amendments to the Contract are incorporated into it.

SECTION XI - NO KICK-BACK CERTIFICATION

Contractor warrants that no person has been employed or retained to solicit or secure this Contract upon any agreement or understanding for a commission, percentage, brokerage, or contingent fee and that no member of the PMGAA Board of Directors or any employee of PMGAA has any interest, financially or otherwise, in Contractor's firm.

For breach or violation of this warranty, PMGAA may annul this Contract without liability.

SECTION XII – SUSPENSION OF SERVICES

Contractor shall, within five (5) business days upon receiving written notice from PMGAA, suspend, delay, or interrupt all or a part of the Scope of Services. Contractor shall resume the Scope of Services within five (5) business days of receiving written notice from PMGAA.

SECTION XIII – TIMES OF PAYMENTS

Contractor shall submit monthly invoices for services actually completed. Charges on invoices must be detailed by facility each month. PMGAA shall review, certify, and approve or reject each invoice in whole or in part. PMGAA shall pay each approved invoice within 30 calendar days of the date that PMGAA approves the invoice. If Contractor offers any payment discounts, PMGAA shall be entitled to take, at its sole option, any prompt payment discounts as specified in **EXHIBIT C.**

SECTION XIV – TIMELY REVIEW

PMGAA will review Contractor's studies, reports, proposals, and other related documents and render any decisions required by Contractor in a timely manner. Notwithstanding these reviews, Contractor remains solely responsible for all of its deliverables and services under this Contract. By PMGAA's reviews, PMGAA does not assume any liability for or retained control over Contractor's work or Contractor's responsibility for the safety of its employees.

SECTION XV – DISPUTE RESOLUTION

All disputes between PMGAA and Contractor arising out of or relating to this Contract will be subject to the Dispute Resolution provisions as set forth in **EXHIBIT E**, "PMGAA Standard Terms and Conditions", attached hereto and incorporated herein by reference.

PMGAA and Contractor shall include a similar dispute resolution provision in all contracts with other contractors and Contractors retained for the Project and shall require all other independent contractors and Contractors to include a similar dispute resolution provision in all contracts with subcontractors, subContractors, suppliers or fabricators retained by them.

SECTION XVI - LIABILITY OF CONTRACTOR

To the fullest extent permitted by law, Contractor shall defend, save, indemnify, and hold harmless PMGAA, its member governments, departments, officers, employees, and agents from and against damages arising out of any act, error, or omission of Contractor relating to its services under this Contract.

SECTION XVII - LAWS AND REGULATIONS

All federal, state, and local laws and regulations that relate to Contractor's services apply to Contractor's performance of this Contract throughout. These laws and regulations are deemed included in this Contract the same as though written out in full, especially the current applicable Federal Aviation Administration (FAA) rules and regulations associated with airport projects; pertinent Airport engineering standards; and local rules, regulations, and industry standards.

SECTION XVIII – INSURANCE REQUIREMENTS

A. Contractor shall procure and maintain for the duration of the contract insurance against claims for injuries to persons or damages to property which may arise from or in connection with the performance of the work hereunder by the Contractor, its agents, representatives, or employees.

B. All insurance policies required by this Contact, except *Workers Compensation*, shall name PMGAA, its agents, representatives, officers, directors, officials and employees as Additional Insured.

C. Minimum Scope and Limits of Insurance. Coverage shall be at least as broad as:

a) Commercial General Liability: Insurance Services Office Form CG 00 01 covering Bodily Injury and Property Damage on an "occurrence" basis, including personal & advertising injury with limits no less than $5,000,000 per occurrence, $5,000,000 General Aggregate.

b) Auto Liability: ISO Form CA 00 01 covering any auto (Symbol 1), or if Contractor has no owned autos, hired, (Symbol 8) and non-owned autos (Symbol 9), with limit no less than $5,000,000 Combined Single limit per accident for bodily injury and property damage.

c) Workers' Compensation: Statutory Limits as required by the state of Arizona, and Employer's Liability Insurance with limit of no less than $1,000,000 per accident for bodily injury or disease.

D. If the Contractor maintains higher limits than the minimums shown above, PMGAA requires and shall be entitled to coverage for the higher limits maintained by the Contractor. Any available insurance proceeds in excess of the specified minimum limits of insurance and coverage shall be available to PMGAA.

E. Additional insurance provisions. The insurance policies shall provide, or be endorsed to include, the following provisions:

i. Notice of Cancellation: Each insurance policy required above shall provide that coverage shall not be canceled, except with notice to PMGAA.

ii. Waiver of Subrogation: Contractor waives any right to subrogation. Contractor shall obtain an endorsement necessary to affect this waiver of subrogation from the insurer for all lines of coverage required by this Contract, except *Workers Compensation* and *Professional Liability,* for claims arising out of the Contractor's work or service.

iii. Primary Coverage: For all claims related to this Contract, all of Contractor's insurance policies will be primary and non-contributory. Any insurance or self-insurance maintained by PMGAA, its officers, officials, employees, or volunteers will be in excess of Contractor's insurance and will not contribute with it.

iv. Deductibles and Self-Insured Retentions: Any deductibles or self-insured retentions must be declared to and approved by PMGAA. PMGAA may require the Contractor to provide proof of ability to pay losses and related investigations, claim administration, and defense expenses within the retention.

v. Acceptability of Insurers: Insurance is to be placed with insurers with a current A.M. Best's rating of no less than A, VII, unless otherwise acceptable to PMGAA.

vi. Claims Made Policies: No Claims Made policies (other than Professional Liability) will be accepted. For policies that provide claims-made coverage:

a) The Retroactive Date must be shown and must be before the date of the contract or the beginning of contract work.

b) Insurance must be maintained, and evidence of insurance must be provided for at least five (5) years after completion of the contract of work.

c) If coverage is canceled or non-renewed, and not replaced with another claims-made policy form with a Retroactive Date prior to the contract effective date, the Contractor must purchase "extended reporting" coverage for a minimum of five (5) years after completion of work.

vii. Verification of Coverage: Contractor shall furnish PMGAA with original certificates and amendatory endorsements or copies of the applicable policy language effecting coverage required by this clause. All certificates and endorsements are to be received and approved by PMGAA before work commences. However, failure to obtain the required documents prior to the work beginning shall not waive the Contractor's obligation to provide the required insurance. PMGAA reserves the right to require complete, certified copies of all required insurance policies, including endorsements required by these specifications, at any time.

viii. Subcontractors: Contractor shall require and verify that all subcontractors maintain insurance meeting all the requirements stated herein, and Contractor shall ensure that PMGAA is an additional insured on insurance required from subcontractors.

ix. Special Risks or Circumstances: PMGAA reserves the right to modify these requirements, including limits, based on the nature of the risk, scope of services, prior experience, insurer, coverage, or other special circumstances.

SECTION XIX NOTICES

Any notice, report or information which may be or is required to be given under this Contract will be in writing and shall be sent by registered or certified mail, return receipt requested, postage prepaid, addressed as follows:

TO PMGAA: Phoenix-Mesa Gateway Airport Authority
Attn: Operations and Maintenance Director
5835 South Sossaman Road
Mesa, Arizona 85212

TO CONTRACTOR: Flagship Airport Services, Inc.
Attn: Jim Mikacich
1050 5th Street
San Jose, CA 95112

or to such other person(s) or address(es) as any such Party may designate from time to time by notice to the other Parties in accordance with this Section.

SECTION XX LOST AND FOUND ITEMS

The Contractor must call the Airport Operations Center immediately at 480-988-7570 to report unattended or found items. Contractor employees must remain with the found items until appropriate Airport Operations staff responds to take custody of the items.

SECTION XXI ITEMS REQUIRING REPAIR

Contractor's employees shall report daily, through the Supervisor, all conditions requiring attention of PMGAA, such as broken fixtures, broken dispensers, leaking pipes, defective equipment, etc. Unusual conditions shall also be reported to PMGAA staff, such as unlocked doors, non-routine occupancy, etc.

SECTION XXII STORAGE AREAS

PMGAA, at its sole discretion, may provide storage area(s) to be used by Contractor for storage of materials and equipment. The Contractor shall keep such storage places neat, clean, and sanitary. Contractor shall not utilize storage areas for non-operating equipment, expired or unusable materials or supplies.

SECTION XXIII LIQUIDATED DAMAGES

For the purposes of this section, "employee" shall mean the same as "worker" or "subcontractor".

A. PMGAA reserves the right, at its sole and absolute discretion, to temporarily suspend, deny or permanently revoke Contractor's operating privileges under this Contract in the event of extended failure to meet the requirements of this Contract or failure to correct deficiencies in performance.

In addition to any other remedy available to PMGAA at law or in equity, the Contractor will be liable for and must pay to PMGAA the amounts listed below for each violation by the Contractor. The parties further agree that the amounts are reasonable and approximate the actual or anticipated loss to PMGAA at the time and making of this Contract in the event that the Contractor commits a breach. The parties acknowledge and agree to the fixed amounts set forth below because of the difficulty of proving PMGAA's actual damages in the event that the Contractor commits a breach. PMGAA may impose liquidated damages as follows:

Insufficient employees to staff minimum weekly staff hours.	$150 per every 12 hours short
Recurring deficiencies of the same nature that exceeds three (3) instances in any 90-day period.	$500 per violation
Failure to meet response times stated in this Contract for: emergency calls; bio fluid and spill clean-up; and unsatisfactory cleaning performance.	$200 per violation
Failure to comply with Airport Security policies.	$500 per violation
Contractor employees not in uniform.	$50 per violation
Wastewater from cleaning equipment not filtered/strained prior to dumping into Airport sanitary system.	$100 per violation
Failure to keep coin operated tampon and sanitary napkin vending machines stocked.	$50 per violation
Failure to submit monthly staff payroll report as specified herein	$100 per violation
Failure to dispose of trash, garbage, refuse, or any other solid/liquid waste (to include biohazards) in an approved manner	$150 per violation
Possessing a deadly weapon as defined by Arizona law (A.R.S. § 13-3101(A)(1)).	$500 per violation

B. Prior to the imposition of liquidated damages, the Contractor will be notified in writing by PMGAA. PMGAA's notice will include a brief narrative apprising the Contractor of the time, place, and nature of the violation(s). The notice will set forth those facts substantiating the violation. The Contractor will be afforded an opportunity to respond, in writing, within twenty-four (24) hours from date and time of the notice.

C. The Contractor must agree to properly cure any default within three (3) business days from the date the notice of default is sent by PMGAA. If the unsatisfactory condition is not corrected within three (3) business days, then liquidated damages may be applied at the discretion of PMGAA.

D. All amounts owed by the Contractor are due and payable to PMGAA within thirty (30) calendar days after the notice of violation. The amount payable will be deducted from the Contractor's invoice on the next month's invoice statement.

E. The above list may be adjusted/added to/deleted to by PMGAA at any time with written notice to Contractor.

F. Contractor agrees all of the deficiencies listed in this section shall result in PMGAA incurring damages that are impractical or impossible to determine. Contractor agrees the monetary assessments set forth in this section are reasonable approximations of such damages. The parties intend that Contractor's payment of the Liquidated Damages amount would serve to compensate PMGAA for any breach by Contractor of its obligations under this section, and they do not intend for it to serve as punishment for any such breach by Contractor, but rather a reasonable measure of damages.

SECTION XXIV SECURITY

For the purposes of this section, "employee" shall mean the same as "worker" or "subcontractor".

A. The Contractor acknowledges that the employees it provides pursuant to this Contract must be at Contractor's expense and subject to background and security checks and screening at the request of PMGAA. The Contractor must make the results of checks and screening available to PMGAA for all employees considered for performing work, including supervision and oversight, under this Contract. PMGAA may make further security inquiries and checks. PMGAA may, in its sole discretion, accept or reject any or all of the employees proposed by the Contractor for performing work under this Contract.

B. If Contractor's employee's background check is unsatisfactory, whether an initial or subsequent periodic background check, such employee shall not be permitted to work at or from PMGAA and such employee shall immediately deliver his/her SIDA identification badge to the PMGAA Badging Office.

C. Neither Contractor nor Contractor's staff shall permit any other individual to have access to secure areas of buildings, rooms, nor grounds as the same may be designated by PMGAA, without prior approval from PMGAA Management. Permitting or allowing unauthorized persons, such as friends, visitors, children or any other family members, access to such secure areas shall be cause for termination of the Contract.

D. The Contractor shall comply with the Airport's Security Plan, and actions directed by PMGAA to comply with security directives issued by the Transportation Security Administration, and any amendments hereto.

E. Contractor shall comply with and if necessary assist PMGAA with the Airport Emergency Plan as approved by the Federal Aviation Administration (FAA).

F. The Contractor acknowledges and agrees that the access control, badge, and key requirements in this Section are necessary to preserve and protect public health, safety, and welfare. Accordingly, the Contractor agrees to properly cure any default under this Section within three (3) business days from the date notice of default is sent by PMGAA.

Contractor's default under this Section shall include the following, all of which constitute a material breach of the Contract:

1. Contractor's employee gains access to an Airport facility without the proper badge or key;
2. Contractor's employee uses another person's badge or key to gain access to an Airport facility;
3. Contractor's employee commences services under this Contract without the proper badge, key, or Background Screening;
4. Contractor's employee or the Contractor submits false, incomplete, or misleading information or negligently submits incorrect information to PMGAA to obtain a badge, key, or applicable Background Screening; or

5. The Contractor fails to collect and timely return an employee's badge or key upon termination of the employee's employment, reassignment of the employee to another airport facility, or upon the expiration, cancellation, or termination of this Contract.

SECTION XXV PAYROLL RECORDS AND LABOR CERTIFICATION REPORT

Contractor shall submit, no later than the fourth day of each month for the preceding month, payroll records for employees working under this Contract at any PMGAA facility.

Contractor shall complete a Monthly Labor Certification form, provided by PMGAA, and submit with the above payroll records, no later than the fourth day of each month for the preceding month.

Executed as of the Commencement Date.

CONTRACTOR
FLAGSHIP AIRPORT SERVICES, INC.,
a California S-Corporation

By: James M. Mikacich

Name: James M. Mikacich

Title: NVP, Aviation Sales

Date: June 25, 2021

PMGAA
PHOENIX MESA GATEWAY AIRPORT AUTHORITY, a joint powers airport authority authorized by the state of Arizona

By: _____

Name: J. Brian O'Neill, A.A.E.

Title: Executive Director/CEO

Date: _____

EXHIBIT A – SCOPE OF SERVICES & FEE SCHEDULE

The services to be performed by Contractor and the completion of related efforts are specified in the following Scope of Services & Fee Schedule agreed to by the parties.

SCOPE OF SERVICES

Contractor shall provide the labor, supervision, materials, equipment, cleaning supplies, and incidentals, except as provided for in herein, for complete janitorial cleaning services required to maintain a clean, sanitary, and safe environment in the locations on Airport property. The Contractor must, at a minimum, meet the following standards in performing janitorial service.

There are two Scopes of Services for this Contract:

1. Airport Terminal Building
2. Airport Campus Buildings

All services, conditions, and requirements listed herein shall be performed and adhered to by Contractor performing services at the Airport Terminal Building and all Campus Buildings unless specified otherwise

CLEANING/MAINTENANCE:

1. **Day Porter Services – Airport Terminal Building Only**
   a. Day porter personnel will continuously monitor the Terminal Complex to identify needed custodial activities to maintain a clean and orderly facility.
   b. Staff shall utilize the *General Cleaning*, *Emptying Trash & Recycle Receptacles*, and *Restroom Maintenance tasks* as detailed herein, while on duty.
2. **Facility Porter – Airport Campus Buildings Only**
   a. Facility porter personnel will continuously monitor the Airport Campus Buildings to identify needed custodial activities to maintain clean and orderly facilities.
   b. Staff shall utilize the *General Cleaning*, *Emptying Trash & Recycle Receptacles*, and *Restroom Maintenance tasks* as detailed herein, while on duty.
   c. Position shall be on-site at PMGAA Campus Buildings Monday – Friday, 8:00 am to 5:00 pm
3. **General Cleaning**
   a. Dusting and/or wet washing/wiping
      i. All surfaces up to sixteen (16) must be dusted and/or wet washed/wiped to remove all dirt, debris, lint etc.
      ii. All sensitive and electronic surfaces shall be avoided.
   b. Brightwork (Stainless Steel, Chrome, Brass)
      i. All cleaned metal surfaces must be free from deposits or tarnish. These items must have a uniformly bright appearance, free from spots, smudges, and streaks. Cleaning agents must be removed from all adjacent surfaces.
   c. Cigarette Urns
      i. Each receptacle shall be emptied of all butts, ash, and other debris.
      ii. Urns shall be kept clean by washing or other means as necessary to keep them looking clean and as sanitary as reasonable.
   d. Curb areas, sidewalks, and courtyards
      i. Each area shall be swept and/or washed to remove dust, dirt, trash, and debris of all types.

e. Floor Care
   i. Hard surfaces shall be swept
   ii. Carpet shall be vacuumed to remove all visible debris.
f. Glass Cleaning
   i. Door glass, sidelights, glass display cases, partition glass & Plexiglas, information display monitors and mirrors shall be cleaned with the appropriate chemicals and in a manner that ensure the surface is free of streaks, film, deposits, and has a uniform surface.
g. Sweeping
   i. All hard floors (indoor and outdoor) must be swept each night. This includes sweeping under all furniture, behind plants, machines, and waste receptacles.
h. Vacuuming
   i. Vacuum to remove all visible debris. Vacuuming must be completed at a frequency that protects the integrity of the carpet and prolong wear.
i. Carpet Spot Cleaning
   i. Proper spot cleaning techniques shall be utilized to maintain the appearance of the carpet.

4. Emptying Trash & Recycle Receptacles

a. Trash and Recycle receptacles must be emptied and spot cleaned as needed to maintain safe and sanitary conditions. Liners must be replaced at each emptying of the receptacle.
b. Periodically, all receptacles must be thoroughly cleaned, inside and out as needed with germicidal detergent.

5. Restroom Maintenance

a. Use a disinfectant cleaning solution to clean and wipe down the following surfaces every cleaning day. All surfaces shall be wiped dry. Cleaning cloths used for toilets and urinals shall not be used for any other purpose.
   i. Toilets (all surfaces and handles)
   ii. Urinals (all surfaces and handles)
   iii. Wash basins and counters
   iv. Divider and stall partitions
   v. Doors and kick plates
   vi. Light switches and switch covers
   vii. Handles, doorknobs, chrome fixtures
   viii. Dispensers and hand dryers
   ix. Sanitary napkin/tampon receptacles
   x. Trash receptacle exterior surfaces
   xi. Baby changing stations
   xii. Tile wainscot
b. Use appropriate chemicals, brushes, and pumice stone to remove stains, streaks, film, mildew and other deposits from toilet, urinal, wash basin and partition surfaces. This shall be done to continuously maintain a very clean appearance and a sanitary, odor-free condition. All surfaces shall be wiped dry to help avoid streaks and spotting from hard water deposits.
c. Empty trash receptacles and install new plastic liners.
d. Empty sanitary napkin/tampon receptacles and install new plastic liners.
e. Clean mirrors with glass cleaner until free of streaks and spots.
f. Sweep and wet mop all floors and baseboards with a solution of clean water and a disinfectant. 'Wet floor' signs are required while the floors dry. Rinse mops often and again after the job is complete. Mops shall be wrung out and hung in the air to dry between cleanings. Dirty or stinking mops are not permitted. Mops and buckets will be frequently inspected to determine their suitability for cleaning in restrooms and all other areas.

g. The Contractor shall maintain all new and existing dispensers for these products at a quantity level that will ensure facility users have a constant supply. The Contractor shall respond within 30 minutes to correct outages of any:
   i. Paper products
   ii. Lotion soap packaged to fit dispensers
   iii. Air freshener fillers
   iv. Sanitary napkins and tampons
   v. Urinal screens
   vi. Facial quality toilet tissue
   vii. Paper toilet seat covers
   viii. Paper towels to fit dispensers
   iv. Baby changing station liners
   x. Foaming hand sanitizers
   xi. Sanitary napkin and tampon disposal bags

6. Restock Supplies

a. Contractor shall be responsible for pick-up, check-out and transporting by means of a street legal vehicle, of bulk expendable supplies from the PMGAA warehouse to the subject facilities and restocking all dispensers of such supplies.

7. Floor Maintenance

a. General
   i. Unless noted otherwise, all floors shall be checked and maintained for cleanliness and appearance each day that basic cleaning tasks are scheduled to be performed.
b. Sweep & Mop/Scrub
   i. Remove all loose dirt, dust, debris, etc. by sweeping all hard surfaces
   ii. Wet mop or auto scrub the surface to remove all dust, dirt, liquids, debris, or other substances from all hard surfaces.
c. Hard floors – Concrete
   i. Burnish and Scrubbing
      a) Floors must be burnished and scrubbed as needed to sufficiently maintain maximum gloss.
   ii. Striping and Refinishing
      a) Follow manufacturer guidance for application, installation, and on-going maintenance of PMGAA's floor finishes.
         1) Terminal Floor Finish: Scotchgard™ Stone Floor Protector
d. Hard floors – Linoleum
   i. Burnish
      a) Floors must be burnished and scrubbed per the manufacturer's recommendation to sufficiently maintain maximum gloss.
   ii. Striping and Refinishing
      a) Follow manufacturer guidance for application, installation, and on-going maintenance of PMGAA's floor finishes.
         1) Gateway Aviation Services Building Floor Finish: Signature by Diversey
e. Hard floors – Tile
   i. Scrubbing
      a) Tile floors shall be scrubbed to ensure a uniformly clean surface free of any soiling. A tile specific floor cleaner shall be utilized to remove excessive soiling and ensure all grout maintains a uniformly clean appearance.
f. Carpet
   i. Extraction Cleaning shall be performed as follows:
      a) All loose dirt, sticky substances, trash, debris and other unwanted deposits shall be vacuumed from the carpet in preparation for carpet extraction cleaning.

b) The carpet shall be inspected for stains, gum, and other discolorations before the extraction cleaning begins, and an effort shall be made to remove all of the blemishes that are located.

c) The carpets shall be cleaned using truck-mounted, (except where prohibited by physical restrictions) hot water extraction equipment capable of operating with two suction hoses up to 600 feet in combined length. Cleaning chemicals, approved by the equipment and carpet manufacturer shall always be utilized. The chemical cleaning solution shall be mixed at the weakest strength recommended to minimize foaming and residue problems.

d) The extraction procedure, once started, shall continue until 100 percent of the exposed carpet at that contract site is cleaned and until the solution being extracted appears to be clean and mostly clear, having a color close to that of clean water.

e) Only the minimum amount of water necessary for cleaning shall be used to ensure that the carpet can dry as rapidly as possible. When it is necessary to speed the drying of cleaned carpet areas, so that users may have access to areas without walking on wet carpet, the Contractor shall supply a sufficient number of carpet drying blowers so that carpet is dry before the building opens at regular hours. With this requirement in mind, carpeting shall not be cleaned late into the morning of a day the building will be open for business.

8. **High Reach Cleaning**
   a. Dusting and/or wet washing/wiping of high-reach area items beyond 16' height requiring a mechanical lift shall be performed using appropriate hand tools and cleaning chemicals for the type of surface being dusted or washed.
   b. No streaking or chemical residues shall be left on any surface.
   c. The following high- reach/ceiling building surfaces shall be checked and dusted or wet washed/wiped to remove accumulated dust particles, dirt, debris, lint, cobwebs, grime, stains, smears, film or other deposits and residues:
      i. Fire alarms
      ii. Smoke detectors
      iii. Ceiling corners
      iv. Window ledges
9. **HVAC Cleaning**
   a. Dusting and/or wet washing/wiping of HVAC Louvers and Registers shall be performed using appropriate hand tools and cleaning chemicals for the type of surface being dusted, vacuumed or washed to remove accumulated dust particles, dirt, debris, lint, cobwebs or other deposits and residues.
   b. No streaking or chemical residues shall be left on any surface.
10. **Pet Relief Areas – Airport Terminal Building Only**
    a. Empty pet waste container and restock the "FIDO" bags at each "FIDO Station"
    b. Sanitize, wet wipe, and clean as applicable.
11. **Electrostatic Spraying – Airport Terminal Building Only**
    PMGAA may, at its sole discretion, request Contractor to perform Electrostatic Spraying of the Airport Terminal Building on an as needed basis. Pricing for this option is separate from the above Scope of Services and provided for separately in Exhibit A.
    a. Contractor shall disinfect high touch point areas within the Terminal Complex, including but not limited to, seating, hand rails, door handles, etc., utilizing an electrostatically applied disinfectant. Tenant lease spaces shall be excluded.
    b. The disinfection solution shall meet regulatory standards and be registered with the Food & Drug Administration (FDA).
    c. All required equipment and supplies shall be provided by the Contractor.
    d. Disinfection shall be completed on a daily basis, during off-hours so as to not affect terminal passenger activities.

MANAGERIAL/SUPERVISORY RESPONSIBLITIES

1. On-site manager/supervisors will be responsible for operational decisions to meet the stated cleaning standards. Manager/Supervisors must ensure that all work is adequately performed, satisfies all required specifications, communicates potential problems, and identifies and reports all building maintenance issues as soon as possible to the Airport Operations Center (AOC) at (480) 988-7570.

   On-site shall mean that manager/supervisors are at PMGAA at all times that work is being completed. All janitorial employees must receive close and continuing front-line supervision by Contractor.

2. The on-duty supervisor will be the primary person(s) in charge of self-inspection in compliance with the quality assurance program and shall ensure that:
   a. Contractor's employees wear the approved uniform.
   b. Contractor's employees will not use or tamper with office machines, equipment, or PMGAA employee's personal property at any time.
   c. Contractor's employees will not open desk drawers, cabinets, or refrigerators at any time with the exception that refrigerators may be opened when cleaned.
   d. Contractor's employees will not use personal cell phones or other such personal electronic devices while performing janitorial duties except for emergencies or business related work.
   e. Contractor's employees will be provided with communication devices and shall have such device on their person while performing work duties.
   f. Sufficient staff and resources to complete janitorial scope of work are allocated to PMGAA. This includes the maintenance of an equipment program compliant with the terms and conditions of this Contract.
   g. Hallway access doors, to secured areas, offices, office suites, or AOA gates, and trash enclosure gates, will, unless otherwise specified by PMGAA, be kept locked at all times, for security reasons, even when Contractor's employees are in these areas cleaning.
   h. Assure that Contractor's staff does not bring guests, family members, children or others into secure or restricted areas.

STAFF APPEARANCE AND BEHAVIOR

1. Appearance

   a. Contractor shall establish and enforce dress code policies as approved by PMGAA. All Contractor's personnel shall adhere to the following at all times while on duty at PMGAA:
   b. Uniforms shall consist of a top with company logo and approved pants. If jackets or sweaters are worn, they shall coordinate with the uniform and clearly bear the company logo. Employees shall be in an approved uniform that is clean, neat, and free from tears, holes, frayed edges, and body odor. Open-toed shoes, shorts, and non-company logo hats are not acceptable. All uniforms shall be the same for all employees and must be different in both design and color, from those worn by PMGAA employees. Uniforms shall be approved by PMGAA.
   c. Contractor's employees must always wear PMGAA issued ID badge/access card at all times during work hours, the same to be worn on the outermost garment and above the waist.
   d. Staff shall be clean, well-groomed, and neatly dressed
   e. Contractor's employees' hair and beards must be clean and neatly trimmed. Extreme hairstyles and colors are not appropriate. Excessive or offensive tattoos must be covered while working. Extreme piercings are not appropriate and must be covered while working.

2. Behavior

a. Contractor shall be responsible for the conduct, demeanor, and appearance of its employees while on or about PMGAA subject facilities and while acting in the course and scope of employment.
b. Contractor's employees are to be attentive, alert, and responsive to all customer issues, needs, comments, or complaints. At no time shall a Contractor's employee make a customer feel threatened, insecure, or ignored on and around the subject facilities. Issues should be reported to a Supervisor whenever an employee needs support and guidance.
c. Contractor's employees are prohibited from receiving and soliciting tips under any circumstances.
d. Contractor's employees shall not use profanity, engage in any loud, boisterous or otherwise offensive or disturbing behavior, nor display rudeness to any person at PMGAA.
e. The use, consumption, or storage of alcohol or controlled substances on PMGAA property is not allowed. Contractor's employees that appear to be under the influence of alcohol or drugs shall not be permitted into the subject facilities. Contractor shall have a written drug and alcohol testing policy in place for all staff assigned to PMGAA. Such plan shall be made available to PMGAA upon request.
f. Contractor's employees shall not open any desk, file drawer or cabinets.
g. Contractor's employees shall not use personal cell phones except in emergencies or work related business.
h. Contractor's employees shall not use PMGAA office equipment under any circumstances.

EQUIPMENT AND SUPPLIES

1. Unless otherwise noted, all supplies and equipment required to carry out the janitorial/cleaning operations within the scope of the Contract shall be provided by the Contractor and shall meet the standards of the Federal Occupational Safety and Health Act and the State of Arizona safety codes.

2. Cleaning Equipment

a. Cleaning equipment utilized in the performance at the startup of this Contract must be either new or have been in service no more than 12 months and must currently be operating within manufacturer's specifications. Contractor agrees to utilize the equipment and supplies listed in Contractor's proposals submitted in response to PMGAA's Solicitation 2020-021-RFP.
b. All cleaning equipment must be replaced when equipment does not meet Original Equipment Manufacturer (OEM) performance standards. Equipment must be of the size and type customarily used in work of this nature, equipped with gel batteries and safeguards such as rollers or rubber bumpers to reduce potential damage to building surfaces, and visibly labeled with Contractor's company name and permanently identified with a unique number.
c. Equipment that will not be placed back in service must not be stored onsite. All small tools, such as brooms and dustpans, must be replaced as needed so as to ensure maximum functionality and appearance. PMGAA will approve any equipment replacements or additions. An updated equipment list must be submitted to PMGAA. Contractor equipment, signs, carts, barrels, and tools used within the view of the public must be kept clean and free of accumulated dirt, grime, grease, stickers, tape, and markings. All identification labels, names or markings must be professionally designed and applied.

3. The following are requirements for all cleaning equipment used by custodial service Contractors at PMGAA:

a. Vacuums - Contractor must use commercial grade vacuums with HEPA filtration or equipment that meet these standards along with a bristle beater bar to be used exclusively in all carpeted areas. Backpack and canister vacuum cleaners must be allowed for hard to reach places. Vacuum cleaners

must meet the requirements of the Carpet & Rug institute's "Green Label" Testing Program and operate at less than 70 dBA.

b. Carpet extraction equipment used for restorative deep cleaning must meet the requirements of the Carpet and Rug Institute's "Seal of Approval" Testing Program for deep-cleaning extractors.

c. Powered floor maintenance equipment, including electric and battery- powered floor buffers and burnishers must be equipped with vacuums, guards and/or other devices for capturing fine particulates and operate with a sound level of less than 70 dBA.

d. Propane-powered cleaning equipment may not be used.

4. Contractor must have a repair program in place for preventative maintenance and repair of broken equipment. Contractor must ensure that an appropriate number of machines are in working order each night to perform the cleaning tasks required. In the event that a piece of equipment has a down time of more than two (2) days, the Contractor must lease or rent equipment and inform PMGAA. Lack of equipment will not be accepted as a reason for services not to be performed.

5. Corded equipment shall not be plugged into charging station courtesy outlets in the public areas of PMGAA. Contractor's employees shall not connect multiple extension cords together (daisy-chain) when operating corded equipment. Contractor may be responsible for any damage incurred to electrical outlets and outlet covers caused by the improper disconnection of equipment. De-energized outlets must be reported to the Airport Operations Center immediately.

6. Contractor shall comply with OSHA Hazard Community Standards, 29 CFR 1910.1200. Contractor's staff must follow all aspects of the OSHA Right to Know Program on Hazardous Materials. Material Safety Data Sheets (MSDS) shall be made readily available to PMGAA.

7. Contractor shall submit a written list of all supplies with attached MSDS intended for use at/within the subject facilities. This list shall be submitted no later than one week prior to start of the Contract unless otherwise mutually agreed.

8. Adequate quantities and properly labeled supplies (minimum of two weeks inventory) must be on hand to perform janitorial/cleaning duties at all times. Within 10 days of contract effective date, Contractor shall have all staff trained and resources available to meet PMGAA Pandemic Plan responsibilities.

9. Consumable Supplies

a. Consumable supplies such as toilet tissue, paper towels, soap for dispensers, scented urinal screens, trash liners, hand sanitizer and bathroom air fresheners shall be furnished by PMGAA. The Contractor shall be responsible for transporting, by means of a street legal vehicle, bulk expendable supplies from PMGAA warehouse to the subject facilities and for servicing all dispensers of such supplies per the established cleaning schedule using PMGAA furnished supplies. The PMGAA Warehouse is located at 6263 S. Taxiway Circle, Mesa, AZ, 85212.

b. Expendable supplies shall be utilized exclusively for PMGAA locations and facilities.

c. The Contractor will be responsible for the inventory of expendable supplies in each subject facility and for restocking supplies as needed. Contractor shall accurately and promptly record the removal of supplies from the warehouse in the manner directed by PMGAA. Contractor shall immediately notify PMGAA personnel of a shortage of warehouse supplies, or other supply issues.

10. Radios

PMGAA shall supply Contractor with one (1) 800 MHZ radio for use by designated on-duty employees of Contractor. Each radio will be programmed by PMGAA to function on the PMGAA

radio network. Radio may never leave Airport Property and shall be surrendered to PMGAA for inspection and program updates, or program removal without prior notice.

RESPONSE TIME PLAN AND REQUIREMENTS

1. Contractor must monitor, answer, and respond to all handheld radio calls, cell phone calls, and other communication devices immediately.

a. **Call for Service:** Upon request of Airport Operations, or in an emergency, the Contractor shall respond to the requested location within 15 minutes of notification.

b. **Unsatisfactory Cleaning Performance:** The Contractor will have 24 hours from time of notification to correct unsatisfactory cleaning performance.

c. **Biological Clean-up**: Maintain training and equipment to clean up biological materials.

CLEANING PLANS – HARD FLOOR, HIGH REACH, AND CARPET

1. Contractor, within 30 days of contract execution, shall provide PMGAA with cleaning plans for Hard Floor, High Reach, and Carpet. These cleaning plans shall be reviewed and are subject to approval by PMGAA.

Once approved by PMGAA, these cleaning plans shall become part of this Contract and are incorporated herein, and subject to all terms and conditions of the Contract.

There are no additional charges to PMGAA for the cleaning plans.

QUALITY ASSURANCE AND QUALITY CONTROL APPLICATION

1. Contractor, within 30 days of contract execution, shall work with PMGAA to document, plan, and deploy Contractor's Quality Assurance and Quality Control application. The application shall follow all prescribed features, function, reports, etc. as delineated in the Contractor's proposals submitted to PMGAA under Solicitation 2021-021-RFP.

Once completed, the application shall become part of this Contract and is incorporated herein, and subject to all terms and conditions of the Contract.

There is no additional charge to PMGAA for this application.

FEE SCHEDULE

For the services provided herein, PMGAA agrees to pay Contractor the following amounts:

CAMPUS BUILIDNGS:

FlagShip

Tab F - Price Proposal

2. Complete Attachment F (if proposing for the Airport Campus Buildings Scope of Work)

Phoenix-Mesa Gateway Airport

Attachment F
Price Proposal, Airport Campus Buildings

Complete if submitting a proposal for the Airport Campus Buildings Scope of Work

Offeror agrees to perform all services as detailed in this RFP for the Airport Campus Buildings for the following prices:

YEAR ONE:

Facility	Monthly Price	Annual Price
General Aviation Center	$ $3,038.32	$ $36,459.88
GAC, Customs and Border Protection	$ $303.83	$ $3,645.99
GAC, Badging Office	$ $75.96	$ $911.50
Airport Administration Building, Public	$ $1,519.16	$ $18,229.94
Airport Administration Building, Secure	$ $1,139.37	$ $13,672.46
Air Traffic Control Tower	$ $398.78	$ $4,785.36
Maintenance Building	$ $303.83	$ $3,645.99
Fuel Storage Facility	$ $56.97	$ $683.62
Hangar 46	$ $227.87	$ $2,734.49
Hangar 32	$ $151.92	$ $1,822.99
Car Care Facility	$ $151.92	$ $1,822.99
Lynn Kusy Park	$ $227.87	$ $2,734.49
TOTAL YEAR ONE	**$** $7,595.81	**$** $91,149.71

Solicitation 2021-021-RFP 39

Proposal to Provide Janitorial Service to Phoenix Mesa Gateway Airport Page 26

YEAR TWO:

Facility	Monthly Price	Annual Price
General Aviation Center	$ $3,121.88	$ $37,462.53
GAC, Customs and Border Protection	$ $312.19	$ $3,746.25
GAC, Badging Office	$ $78.05	$ $936.56
Airport Administration Building, Public	$ $1,560.94	$ $18,731.27
Airport Administration Building, Secure	$ $1,170.70	$ $14,048.45
Air Traffic Control Tower	$ $409.75	$ $4,916.96
Maintenance Building	$ $312.19	$ $3,746.25
Fuel Storage Facility	$ $58.54	$ $702.42
Hangar 46	$ $234.14	$ $2,809.69
Hangar 32	$ $156.09	$ $1,873.13
Car Care Facility	$ $156.09	$ $1,873.13
Lynn Kusy Park	$ $234.14	$ $2,809.69
TOTAL YEAR TWO	**$** $7,804.69	**$** $93,656.33

YEAR THREE:

Facility	Monthly Price	Annual Price
General Aviation Center	$ $3,207.73	$ $38,492.75
GAC, Customs and Border Protection	$ $320.77	$ $3,849.27
GAC, Badging Office	$ $80.19	$ $962.32
Airport Administration Building, Public	$ $1,603.86	$ $19,246.37
Airport Administration Building, Secure	$ $1,202.90	$ $14,434.78
Air Traffic Control Tower	$ $421.01	$ $5,052.17
Maintenance Building	$ $320.77	$ $3,849.27
Fuel Storage Facility	$ $60.14	$ $721.74
Hangar 46	$ $240.58	$ $2,886.96
Hangar 32	$ $160.39	$ $1,924.64
Car Care Facility	$ $160.39	$ $1,924.64
Lynn Kusy Park	$ $240.58	$ $2,886.96
TOTAL YEAR THREE	**$** $8,019.32	**$** $96,231.87

Solicitation 2021-401-RFP

YEAR FOUR (optional extension):

Facility	Monthly Price	Annual Price
General Aviation Center	$ $3,295.94	$ $39,551.30
GAC, Customs and Border Protection	$ $329.59	$ $3,955.13
GAC, Badging Office	$ $82.40	$ $988.78
Airport Administration Building, Public	$ $1,647.97	$ $19,775.65
Airport Administration Building, Secure	$ $1,235.98	$ $14,831.74
Air Traffic Control Tower	$ $432.59	$ $5,191.11
Maintenance Building	$ $329.59	$ $3,955.13
Fuel Storage Facility	$ $61.80	$ $741.59
Hangar 46	$ $247.20	$ $2,966.35
Hangar 32	$ $164.80	$ $1,977.57
Car Care Facility	$ $164.80	$ $1,977.57
Lynn Kusy Park	$ $247.20	$ $2,966.35
TOTAL YEAR FOUR	**$** $8,239.85	**$** $98,878.25

YEAR FIVE (optional extension):

Facility	Monthly Price	Annual Price
General Aviation Center	$ $3,386.58	$ $40,638.96
GAC, Customs and Border Protection	$ $338.66	$ $4,063.90
GAC, Badging Office	$ $84.66	$ $1,015.97
Airport Administration Building, Public	$ $1,693.29	$ $20,319.48
Airport Administration Building, Secure	$ $1,269.97	$ $15,239.61
Air Traffic Control Tower	$ $444.49	$ $5,333.86
Maintenance Building	$ $338.66	$ $4,063.90
Fuel Storage Facility	$ $63.50	$ $761.98
Hangar 46	$ $253.99	$ $3,047.92
Hangar 32	$ $169.33	$ $2,031.95
Car Care Facility	$ $169.33	$ $2,031.95
Lynn Kusy Park	$ $253.99	$ $3,047.92
TOTAL YEAR FIVE	**$** $8,466.45	**$** $101,597.40

Solicitation 2021-001-RFP 40

1. **Grand Total (All Campus Buildings, years 1 – 5)**

Facility	Annual Price
TOTAL YEAR ONE	$ $91,149.71
TOTAL YEAR TWO	$ $93,656.33
TOTAL YEAR THREE	$ $96,231.87
TOTAL YEAR FOUR (optional extension)	$ $98,878.25
TOTAL YEAR FIVE (optional extension)	$ $101,597.40

2. **Hourly Rates for Staff for Additional Services:**

Supervisor: $ $31.69
Facility Porter: $ $21.63
Janitorial Staff: $ $22.17

3. **Prompt Payment Discount**

The price(s) quoted herein can be discounted by 0 % if payment is made within 30 days.

Exceptions / Clarifications

Hourly Rates for Staff for Additional Services:
Lead $25.50
Floor Detail Utility Crew $24.68

Jim Mikacich — Digitally signed by Jim Mikacich Date: 2021.04.23 09:65:29 -07'00'
Signature

April 23, 2021
Date

Jim Mikacich
Printed Name

NVP of Sales
Title

Solicitation 2021-01-RFP 41

TERMINAL BUILIDNG:

FlagShip™ Tab F - Price Proposal

Tab F - Price Proposal

1. Complete Attachment E (if proposing for the Airport Terminal Building Scope of Work)

Phoenix-Mesa Gateway Airport

Attachment E
Price Proposal, Airport Terminal Building

Complete if submitting a proposal for the Airport Terminal Building Scope of Work

Offeror agrees to perform all services as detailed in this RFP for the Airport Terminal Building (including the TSA Space within the building) for the following prices:

Contract Year	Monthly Price	Annual Price
Year 1 (one)	$ 53,044.86	$ 636,538.33
Year 2 (two)	$ 54,503.59	$ 654,043.13
Year 3 (three)	$ 56,002.44	$ 672,029.32
Year 4 (four), optional extension	$ 57,542.51	$ 690,510.12
Year 5 (five), optional extension	$ 59,124.93	$ 709,499.15
TOTAL 5 (FIVE) YEARS	**$ 280,218.34**	**$ 3,362,620.05**

1. **Hourly Rates for Staff for Additional Services:**

Supervisor $ 31.69
Day Porter $ 23.63
Janitorial Staff $ 22.17

2. **Prompt Payment Discount**

The price(s) quoted herein can be discounted by 0 % if payment is made within 30 days.

Exceptions / Clarifications

Hourly Rates for Staff for Additional Services:
Lead $25.30
Floor Detail Utility Crew $24.68

Jim Mikacich Digitally signed by Jim Mikacich Date: 2021.04.23 08:54:03 -05'00'
Signature

April 23, 2021
Date

Jim Mikacich
Printed Name

SVP of Sales
Title

Solicitation 2021-001 RFP 47

PMGAA may, at its sole discretion, request Contractor to perform Electrostatic Spraying at the Terminal. If requested, Contractor agrees to perform the service, as detailed in the Contract, for the following price:

3. Complete Attachment G - Add Alternate Option, Electrostatic Cleaning (if proposing for the Airport Terminal Building Scope of Work)

Phoenix-Mesa Gateway Airport

Attachment G
Price Proposal – Add Alternate Option

Submit only if submitting a proposal for the Airport Terminal Building Scope of Work

Offeror agrees to perform the Electrostatic Spraying, as detailed in the Scope of Work under Section Two C of this solicitation, for the following amounts. PMGAA is under no obligation to select this service.

	Monthly Price	Annual Price
YEAR ONE	$ $3,490.15	$ $41,881.85
YEAR TWO	$ $3,586.13	$ $43,033.60
YEAR THREE	$ $3,684.75	$ $44,217.03
YEAR FOUR (Optional Extension)	$ $3,786.08	$ $45,432.99
YEAR FIVE (Optional Extension)	$ $3,890.20	$ $46,682.40
TOTAL		$ $221,247.87

- If PMGAA chooses to have the successful Offeror perform Electrostatic Spraying, billing for this scope of work shall be separate from Offeror's monthly janitorial services invoice.
- If PMGAA chooses to have the successful Offeror perform Electrostatic Spraying, PMGAA may cancel this scope of work with 30 days written notice to Offeror.

Jim Mikacich — Digitally signed by Jim Mikacich Date: 2021.04.23 09:18:53 -05'00'
Signature

April 23, 2021
Date

Jim Mikacich
Printed Name

NVP of Sales
Title

Solicitation 2021-021-RFP 42

EXHIBIT B – STAFFING REQUIREMENTS

Contractor agrees to provide the following staffing, at a minimum, throughout the Contract duration.

FlagShip™ Tab G – Staffing Breakdown

Campus Buildings

Attachment H
STAFFING BREAKDOWN

Complete only the Position Title & Weekly Scheduled Hours fields for all positions proposed as part of Offeror's submittal

Include supervisor position(s) but do NOT include manager position(s)
PMGAA defines a FTE as 40 hours per week

Number	Position Title	Weekly Scheduled Hours	Yearly Hours	FTE
1	Day Porter	40	2080	1
2	Night Cleaner	40	2080	1
3	Floor Utility Detail Crew	10	520	0.25
4			0	0
5			0	0
6			0	0
7			0	0
8			0	0
9			0	0
10			0	0
11			0	0
12			0	0
13			0	0
14			0	0
15			0	0
16			0	0
17			0	0
18			0	0
19			0	0
20			0	0
21			0	0
22			0	0
23			0	0
24			0	0
25			0	0
26			0	0
27			0	0
28			0	0
29			0	0
30			0	0
	Totals	90	4680	2.25

Solicitation 2021-035 RFP 42

Tab G – Staffing Breakdown

1. Complete Attachment H, Staffing Breakdown

Terminal Building

Attachment H
STAFFING BREAKDOWN

Complete only the Position Title & Weekly Scheduled Hours fields for all positions proposed as part of Offeror's submittal

Include supervisor position(s) but do NOT include manager position(s)
PMGAA defines a FTE as 40 hours per week

Number	Position Title	Weekly Scheduled Hours	Yearly Hours	FTE
1	Site Supervisor	40	2080	1
2	Day Lead - Shift 1	56	2912	1.4
3	Day Porters - Shift 1	84	4368	2.1
4	Day Porters - Shift 2	84	4368	2.1
5	Night Lead - Shift 3	40	2080	1
6	Night Janitors - Shift 3	168	8736	4.2
7	Floor Utility Detail Crew - Shift 3	112	5824	2.8
8			0	0
9			0	0
10			0	0
11			0	0
12			0	0
13			0	0
14			0	0
15			0	0
16			0	0
17			0	0
18			0	0
19			0	0
20			0	0
21			0	0
22			0	0
23			0	0
24			0	0
25			0	0
26			0	0
27			0	0
28			0	0
29			0	0
30			0	0
	Totals	584	30368	14.6

Solicitation 2021-020 RFP 43

Electrostatic Spraying

Attachment H
STAFFING BREAKDOWN

Complete only the Position Title & Weekly Scheduled Hours fields for all positions proposed as part of Offeror's submittal

Include supervisor position(s) but do NOT include manager position(s)
PMGAA defines a FTE as 40 hours per week

Number	Position Title	Weekly Scheduled Hours	Yearly Hours	FTE
1	Electrostatic Spraying Tech	42	2184	1.05
2			0	0
3			0	0
4			0	0
5			0	0
6			0	0
7			0	0
8			0	0
9			0	0
10			0	0
11			0	0
12			0	0
13			0	0
14			0	0
15			0	0
16			0	0
17			0	0
18			0	0
19			0	0
20			0	0
21			0	0
22			0	0
23			0	0
24			0	0
25			0	0
26			0	0
27			0	0
28			0	0
29			0	0
30			0	0
	Totals	**42**	**2184**	**1.05**

EXHIBIT C - COMPENSATION

All compensation for services rendered by Contractor shall be based upon criteria established below. All services must be billed through the Contractor.

1. Fees to be Specified in Contract

Any and all services to be performed under this Contract require approval. All compensation for services shall be identified in writing. The Contract shall describe the scope of services to be performed (by tasks and subtasks, where appropriate), the fees associated with that performance, and any applicable special provisions. Contractor's compensation for services included in this Contract is totaled and set forth in **EXHIBIT A**, "Scope of Services and Fee Schedule".

2. Method of Payment

Subject to the terms of this Contract, PMGAA shall pay Contractor the appropriate rate or fixed price amount for services rendered as described in the Contract only after Contractor has submitted an invoice for services performed and PMGAA has certified and approved each invoice.

For services rendered in accordance with the Contract, Contractor shall submit to PMGAA an invoice depicting tasks performed and/or hours spent for services performed. Invoices must be based on the actual hours and/or expenses incurred for the services completed during the billing period. Charges on invoices must be detailed by facility each period. Contractor's invoices must specify that Contractor has performed the services, and PMGAA must certify and approve each invoice as a condition to payment.

3. Contractor Responsibilities for Compensation

Contractor shall prepare monthly invoices and/or progress reports in accordance with terms specified in the Contract. Progress reports will clearly indicate the progress to date and the amount of compensation due by virtue of that progress. All invoices for payment shall be for work completed unless otherwise agreed to by PMGAA. Invoices/requisitions for payment for services subject to funding by the FAA and/or ADOT shall include the documentation requirements of the FAA and/or ADOT, which are outlined in the *Airport Improvement Program (AIP) Handbook* dated September 30, 2014, or most current version.

4. PMGAA Responsibilities for Compensation

PMGAA agrees to pay Contractor's invoices for payment within 30 calendar days after the invoice is approved. PMGAA may withhold payment on any invoice if it believes that Contractor has not performed the work in a satisfactory manner. If PMGAA withholds payment to Contractor, PMGAA shall promptly notify Contractor and explain the reasons for the decision to withhold payment.

5. Billing Address

All invoices submitted to PMGAA for payment shall be submitted to:

Phoenix-Mesa Gateway Airport Authority
Attn: Operations and Maintenance Director
5835 S. Sossaman Road
Mesa, Arizona 85212

EXHIBIT D - SPECIAL PROVISIONS

1. Civil Rights Act of 1964, Title VI – General

The contractor agrees to comply with pertinent statues, Executive Orders and such rules as are promulgated to ensure that no person shall, on the grounds of race, creed, color or national origin, sex, age or disability be excluded from participating in any activity conducted with or benefiting from Federal assistance.

2. Civil Rights Act of 1964, Title VI – Assurances

During the performance of this Contract, the contractor, for itself, its assignees and successors in interest agrees as follows:

a. Compliance with Regulations – Compliance with Regulations: The contractor (hereinafter includes Contractors) will comply with the Title VI List of Pertinent Nondiscrimination Acts And Authorities, as they may be amended from time to time, which are herein incorporated by reference and made a part of this contract.

b. Nondiscrimination – The contractor, with regard to the work performed by it during the contract, will not discriminate on the grounds of race, color, or national origin in the selection and retention of subcontractors, including procurements of materials and leases of equipment. The contractor will not participate directly or indirectly in the discrimination prohibited by the Nondiscrimination Acts and Authorities, including employment practices when the contract covers any activity, project, or program set forth in Appendix B of 49 CFR Part 21.

c. Solicitations for Subcontracts, including Procurements of Materials and Equipment – In all solicitations, either by competitive bidding, or negotiation made by the contractor for work to be performed under a subcontract, including procurements of materials, or leases of equipment, each potential subcontractor or supplier will be notified by the contractor of the contractor's obligations under this contract and the Non-discrimination Acts And Authorities on the grounds of race, color, or national origin.

d. Information and Reports – The contractor will provide all information and reports required by the Acts, the Regulations and directives issued pursuant thereto and will permit access to its books, records, accounts, other sources of information, and its facilities as may be determined by PMGAA or the FAA to be pertinent to ascertain compliance with such Nondiscrimination Acts And Authorities and instructions. Where any information required of a contractor is in the exclusive possession of another who fails or refuses to furnish the information, the contractor will so certify to PMGAA or the FAA as appropriate, and will set forth what efforts it has made to obtain the information.

e. Sanctions for Noncompliance – In the event of a contractor's noncompliance with the Nondiscrimination provisions of this contract, the Recipient will impose such contract sanctions as it or the FAA may determine to be appropriate, including, but not limited to:

i) Withholding of payments to the contractor under the contract until the contractor complies, and/or;
ii) Cancellation, termination, or suspension of the Contract, in whole or in part.

f. Incorporation of Provisions – The contractor will include the provisions of paragraphs one through six of this **EXHIBIT D** in every subcontract, including procurements of materials and leases of equipment, unless exempt by the Acts, the Regulations and directives issued pursuant thereto. The contractor will take action with respect to any subcontract or procurement as PMGAA or the FAA may direct as a means of enforcing such provisions including sanctions for noncompliance. Provided, that if the contractor becomes involved in, or is threatened with litigation by a subcontractor, or supplier because of such direction, the contractor may request PMGAA to enter into any litigation to protect the interests of PMGAA. In addition, the contractor may request the United States to enter into the litigation to protect the interests of the United States.

3. Civil Rights – Title VI List of Pertinent Nondiscrimination Acts and Authorities

During the performance of this contract, the contractor, for itself, its assignees, and successors in interest (hereinafter referred to as the "contractor") agrees to comply with the following non-discrimination statutes and authorities; including but not limited to:

- Title VI of the Civil Rights Act of 1964 (42 U.S.C. § 2000d *et seq*., 78 stat. 252), (prohibits discrimination on the basis of race, color, national origin);
- 49 CFR part 21 (Non-discrimination In Federally-Assisted Programs of The Department of Transportation—Effectuation of Title VI of The Civil Rights Act of 1964);
- The Uniform Relocation Assistance and Real Property Acquisition Policies Act of 1970, (42 U.S.C. § 4601), (prohibits unfair treatment of persons displaced or whose property has been acquired because of Federal or Federal-aid programs and projects);
- Section 504 of the Rehabilitation Act of 1973, (29 U.S.C. § 794 *et seq*.), as amended, (prohibits discrimination on the basis of disability); and 49 CFR part 27;
- The Age Discrimination Act of 1975, as amended, (42 U.S.C. § 6101 *et seq*.), (prohibits discrimination on the basis of age);
- Airport and Airway Improvement Act of 1982, (49 USC § 471, Section 47123), as amended, (prohibits discrimination based on race, creed, color, national origin, or sex);
- The Civil Rights Restoration Act of 1987, (PL 100-209), (Broadened the scope, coverage and applicability of Title VI of the Civil Rights Act of 1964, The Age Discrimination Act of 1975 and Section 504 of the Rehabilitation Act of 1973, by expanding the definition of the terms "programs or activities" to include all of the programs or activities of the Federal-aid recipients, sub-recipients and contractors, whether such programs or activities are Federally funded or not);
- Titles II and III of the Americans with Disabilities Act of 1990, which prohibit discrimination on the basis of disability in the operation of public entities, public and private transportation systems, places of public accommodation, and certain testing entities (42 U.S.C. §§ 12131 – 12189) as implemented by Department of Transportation regulations at 49 CFR parts 37 and 38;
- The FAA's Non-discrimination statute (49 U.S.C. § 47123) (prohibits discrimination on the basis of race, color, national origin, and sex);
- Executive Order 12898, Federal Actions to Address Environmental Justice in Minority Populations and Low-Income Populations, which ensures non-discrimination against minority populations by discouraging programs, policies, and activities with disproportionately high and adverse human health or environmental effects on minority and low-income populations;
- Executive Order 13166, Improving Access to Services for Persons with Limited English Proficiency, and resulting agency guidance, national origin discrimination includes discrimination because of limited English proficiency (LEP). To ensure compliance with Title VI, you must take reasonable steps to ensure that LEP persons have meaningful access to your programs (70 Fed. Reg. at 74087 to 74100);
- Title IX of the Education Amendments of 1972, as amended, which prohibits you from discriminating because of sex in education programs or activities (20 U.S.C. 1681 et seq).

4. <u>Certification Regarding Debarment, Suspension, Ineligibility and Voluntary Exclusion</u>

Contractor, by accepting this Contract, certifies that neither it nor its principals is presently debarred, suspended, proposed for debarment, declared ineligible, or voluntarily excluded from participation in this transaction by any government department or agency.

5. <u>Security Badges</u>

Contractor's adherence to and familiarity with federal security regulations is essential. Contractor shall be responsible for fulfilling the security requirements described herein.

a. <u>Secured Area Access</u> – Contractor's employees will have access to the Security Identification Display Area (SIDA) at the Airport. Such access requires issuance of an identification badge and pursuant to the rules and requirements of the Transportation Security Administration; PMGAA must conduct a background check on each of Contractor's employees working at PMGAA. The background check, for SIDA identification badging, includes an individual FBI Criminal History Check. Further, all persons

requesting unescorted access to secure areas of the Airport must independently complete a PMGAA sponsored security class prior to obtaining an identification badge.

b. Authorized Signers - Contractor will be required to establish no more than two Authorized Signers who have the authority to request badging on behalf of the Contractor. Authorized Signers shall comply with PMGAA Authority Badge Application rules.

c. Employee Security Badges – All Contractor and subcontractor personnel performing work functions in accordance with this Contract shall obtain and properly display an Airport security badge. Contractor shall submit a Security Badge Application form to the PMGAA security office for each employee requiring unescorted access.

i. The cost of the initial background checks and any subsequent periodic background checks, , identification badges, and Contractor employee's attendance at any required security classes shall be paid by the Contractor. Payment is due at time of services. Badge fees are identified on the current *Airport Fees, Services and Rental Rates* available via the Airport website at www.gatewayairport.com and are subject to change.
ii. Contractor shall immediately notify the PMGAA Badging Office of any Contractor personnel whose employment status has changed.
iii. Upon Contractor's employee no longer working at PMGAA, Contractor shall retrieve all security badges and keys from employee and return them to the PMGAA Badging Office. A fee, as indicated on the most current *Airport Rates and Charges Schedule*, will be charged for each badge that is damaged, lost or not returned.
iv. An authorized representative of Contractor must also obtain and submit a Security Media Authorization form, which is to be submitted to the PMGAA badging office. The Security Media Authorization form and instructions are available via the Airport website at www.gatewairport.com.
v. A training class on aviation security must be successfully completed before individuals are issued a badge. Fees for the security badge include attendance for the necessary training classes.
vi. Under certain circumstances and out of control of PMGAA, security measures may change on short notice. No deviations from any security measure shall be allowed at any time.
vii. Airport Security Badge Application forms and instructions are available via the Airport website at www.gatewayairport.com.

d. Fines – Due to both the safety and security precautions necessary at the Airport, any failure of the Contractor to adhere to prescribed Airport requirements/regulations has consequences that may jeopardize the health, welfare and lives of Airport customers and employees, as well as the Contractor's own employees. Therefore, if Contractor is found to be in non-compliance with any security, airfield badging/licensing and airfield safety requirement, a Notice of Violations (NOV) may be issued. A current listing of fines is available by contacting the PMGAA Badging Office.

6. Standard Terms & Conditions

PMGAA's Standard Terms & Conditions (in **EXHIBIT E** attached) include clauses that pertain to both construction and professional services. For such, the term "Consultant" is to be considered same as "Contractor." If a clause implies construction service then it is waived for a professional services contract. PMGAA reserves the right to make that determination if there is a conflict.

7. Federal and State Guidelines and Regulations

All work performed under this Contract must satisfy FAA and applicable agency standards, and be accomplished in accordance with applicable federal, state and local guidelines and regulations, including FAA Advisory Circulars, NEPA and Arizona environmental statutes.

Contractor shall perform the services as described in approved Contract in accordance with the applicable requirements imposed by PMGAA, ADOT, FAA and any other applicable sponsoring agencies. Contractor and its subconsultants/subcontractors, if any, shall comply with any and all applicable laws, regulations, executive orders,

policies, guidelines, and any other requirements for FAA Airport Improvement Program (AIP) projects. Contractor shall provide PMGAA all information, reports, documents, and/or certifications requested by PMGAA for the satisfaction of any grant requirements for the reimbursement of services, including, without limitation, identifying the specific services provided by Contractor and the billing period(s) during which services were or are to be provided. Nothing herein shall be construed as making the FAA or ADOT a party to this Contract.

8. Right to Contract With Other Firms

PMGAA shall have the right to contract with other firms and/or persons and/or to self-perform additional services, which may be the subject of this Contract. Contractor shall conduct its operations and perform any services authorized under the Contract so as not to interfere with or hinder the progress of completion of the work being performed by PMGAA and/or other firms and/or persons. Contractors working on the same project shall cooperate with each other in the performance, scheduling, and, if applicable, the integration of their respective services.

EXHIBIT E – PMGAA STANDARD TERMS & CONDITIONS

1. **Certification.** Contractor certifies:
   a. The award of this Contract did not involve collusion or other anti-competitive practices.
   b. It shall not discriminate against any employee or applicant for employment in violation of Federal Executive Order 11246, or A.R.S. Section 31-1461, et. seq.
   c. It has not given, offered to give, nor intends to give at any time hereafter, any economic opportunity, future employment, gift, loan, gratuity, special discount, trip, favor, or service to a public servant in connection with this Contract; and Contractor hereby certifies that the individual signing this Contract is an authorized agent for Contractor and has the authority to bind the Contractor to the Contract.

2. **Termination of Contract.**

   a. PMGAA reserves the right to cancel this Contract in whole or in part due to failure of Contractor to carry out any term, promise, or condition of the Contract. At least ten (10) business days before terminating the Contract, PMGAA will issue a written notice of default specifying one of the following reasons. PMGAA shall, at all times during the term of the Contract or any extension term thereto, have the sole authority to determine if the default has been cured to its satisfaction.

      (1) Contractor has provided personnel that do not meet the requirements of the Contract.

      (2) Contractor has failed to perform adequately the stipulations, conditions or services/specifications required in this Contract.

      (3) Contractor has attempted to impose on PMGAA personnel or materials, products, or workmanship of unacceptable quality.

      (4) Contractor has failed to furnish the required service(s) and/or product(s) within the time stipulated in the Contract or associated Authorization of Services.

      (5) Contractor has failed to make progress in the performance of the requirements of the Contract or Authorization of Services, or Contractor fails to give PMGAA adequate assurance the Contractor will perform the Contract in full and on time.

      (6) Each payment obligation of PMGAA created hereby is conditioned on the availability of PMGAA, state, or federal funds appropriated for payment of the obligation. If funds are not available or allocated by PMGAA for continuance of service under this Contract, then PMGAA may terminate the Contract. PMGAA shall promptly notify Contractor regarding the service that may be affected by a shortage of funds. No penalty accrues to PMGAA if this provision is exercised, and PMGAA shall not be liable for any future payments due or for any damages as a result of termination under this paragraph.

   b. This Contract may be terminated at any time by PMGAA or Contractor - with or without cause - provided the terminating party gives ninety (90) calendar days' advance written notice to the other party. PMGAA may terminate this Contract, in whole or in part, for PMGAA's convenience and with ninety (90) days' written notice.

   c. If this Contract is terminated, then PMGAA is liable only for services rendered and material received, certified, and approved by PMGAA under the Contract before the termination effective date.

3. **Dispute Resolution**.

   a. **Negotiations**. If a dispute arises out of or relates to this Contract or its breach, the parties to this Contract shall endeavor to settle the dispute through direct discussions as a condition precedent to mediation or binding dispute resolution.

   b. **Mediation**. Should the parties to this Contract be unable to resolve their dispute through direct negotiations, the parties to this Contract, upon the written request of either, shall engage in mediation, to be administered privately by a mediator and according to rules mutually agreed upon by the parties to

this Contract, or, the absence of such mutual agreement, by a mediator appointed by JAMS and administered by JAMS in accordance with its then-current mediation rules. The fees and costs of mediation shall be split equally by the parties to this Contract, but subject to reallocation following binding dispute resolution.

c. **Binding Dispute Resolution**. Should the parties to this Contract be unable to resolve their dispute through direct negotiations or mediation, either party may, within the time limitations for bringing claims under Arizona law and this Contract, commence formal dispute resolution proceedings. Both parties to this Contract consent to binding arbitration administered by JAMS according to its then current arbitration rules, provided, however, that (i) in the event both parties agree, the arbitration may be administered privately by an arbitrator and according to rules mutually agreed upon by the parties to this Contract, and (ii) in the event any party seeks relief against the other party or against a non-party which cannot fully be granted in arbitration, by reason of non-joinder or otherwise, the parties to this Contract are excused from this arbitration requirement and the parties to this Contract shall proceed in the state or federal courts of competent jurisdiction and located in Maricopa County, Arizona. In any arbitration or litigation, the prevailing party shall be entitled to an award of its reasonable attorneys' fees and costs as determined by the arbitrator or court as applicable.

4. **Independent Contractor.** At all times, each party acts in its individual capacity not as agent, employee, partner, joint venturer, or associate of the other party. An employee or agent of one party may not be deemed or construed to be the employee or agent of the other party for any purpose whatsoever. Neither Contractor nor any of its employees are entitled to compensation from PMGAA in the form of salaries, paid vacation, or sick days. PMGAA will not provide any insurance to Contractor, including *Workers' Compensation* coverage. PMGAA will not withhold FICA, taxes, or any similar deductions from PMGAA's payments under this Contract.

5. **Affirmative Action.** Contractor shall abide by all the federal and state of Arizona provisions for equal opportunity in the work place.

6. **Human Relations**. Contractor shall abide by all the federal and state of Arizona provisions against discrimination of disadvantaged business enterprises in applicable PMGAA contracts.

7. **Non-Exclusive Contract**. This Contract is for the sole convenience of PMGAA. PMGAA reserves the right in its discretion to obtain the same or similar goods or services from any other source.

8. **Americans with Disabilities Act.** Contractor shall comply with all applicable provisions of the *Americans with Disabilities Act* (Public Law 101-336, 42 U.S.C. 12101-12213) and applicable federal regulations under the *Act*.

9. **Confidentiality of Records**. Contractor shall establish and maintain procedures and controls that are acceptable to PMGAA for the purpose of assuring that no information contained in its records or obtained from PMGAA or from others in carrying out its functions under the Contract shall be used by or disclosed by it, its agents, officers, or employees, except as required to efficiently perform duties under this Contract. Persons requesting such information should be referred to PMGAA. Contractor also agrees that any information pertaining to individual persons shall not be divulged other than to employees or officers of Contractor as needed for the performance of duties under the Contract, unless otherwise agreed to in writing by PMGAA.

10. **Gratuities.** PMGAA may, by written notice to the Contractor, cancel this Contract if it is found that gratuities, in the form of entertainment, gifts or otherwise, were offered or given by Contractor or any agent or representative of Contractor, to any officer or employee of PMGAA involved in the amending, or the making of any determinations with respect to the performing of such Contract. If this Contract is canceled by PMGAA under this provision, PMGAA shall, in addition to any other rights and remedies, repay to the Contractor the amount of the gratuity.

11. **Applicable Law.** This Contract shall be governed by, and PMGAA and Contractor shall have, all remedies afforded each by the *Uniform Commercial Code*, as adopted in the state of Arizona, except as otherwise provided in this Contract or in laws pertaining specifically to PMGAA. This Contract shall be governed by

the laws of the state of Arizona, and suits pertaining to this Contract shall be brought only in federal or state courts in the state of Arizona.

12. **Contract**. This Contract is based on and the result of a negotiated Scope of Work/Services and Proposal, Bid or Statement of Qualifications submitted by Contractor under this RFP, IFB or RFQ. The Contract contains the entire agreement between PMGAA and Contractor. No prior oral or written agreements, contracts, proposals, negotiations, purchase orders, or master agreements (in any form) are enforceable between the parties.

13. **Contract Amendments**. This Contract shall be modified only by a written amendment signed by the PMGAA Executive Director or his/her designee, and persons duly authorized to enter into contracts on behalf of Contractor.

14. **Provisions Required by Law**. Each and every provision of law and any clause required by law to be in the Contract shall be read and enforced as though it were included herein, and if through mistake or otherwise any such provision is not inserted, or is not correctly inserted, then upon the application of either party the Contract shall forthwith be physically amended to make such insertion or correction.

15. **Severability.** The provisions of this Contract are severable to the extent that any provision or application held to be invalid shall not affect any other provision or application of the Contract, which may remain in effect without the valid provision, or application.

16. **Protection of Government Property.** Contractor shall use reasonable care to avoid damaging all PMGAA property, including buildings, equipment, and vegetation (such as trees, shrubs, and grass). If Contractor damages PMGAA's property in any way, Contractor shall immediately report such damage to PMGAA and repair or replace the damage at no cost to PMGAA, as directed by the PMGAA Executive Director. If Contractor fails or refuses to repair or replace the damage, then PMGAA may terminate the Contract, and PMGAA shall deduct the repair or replacement cost from money due Contractor under the Contract.

17. **Interpretation – Parol Evidence.** This Contract is intended by the parties as a final expression of their agreement and is intended also as a complete and exclusive statement of the terms thereof. No course of prior dealings between the parties and no usage of the trade shall be relevant to supplement or explain any term used in this Contract. Acceptance or acquiescence in a course of performance rendered under this Contract shall not be relevant to determine the meaning of this Contract even though the accepting or acquiescing party has knowledge of the nature of the performance and opportunity to object.

18. **Subcontracts.** Contractor shall not assign any rights or interest nor enter into any subcontract with any other party to furnish any of the materials, goods or services specified herein without the prior written permission of PMGAA. PMGAA may, at its sole discretion, accept or reject proposed subcontractors or assignment. PMGAA shall notify Contractor of its acceptance or rejection within forty-five (45) days or written request by Contractor. All subcontracts shall comply with federal and state laws and regulations applicable to the materials, goods or services covered by the subcontract and shall include all the terms and conditions set forth herein, which shall apply with equal force to the subcontract, as if the subcontractor were the Contractor referred to herein. Contractor is responsible for Contract performance whether subcontractors are used.

19. **No Waiver.** No provision in this Contract shall be construed, expressly or by implication, to waive either party's existing or future claim, right, or remedy available by law for breach of contract. The failure of either party to insist on strict performance of any Contract term or condition; to exercise or delay exercising any right or remedy provided in the Contract or by law; or to accept materials, services, or Contractor's services under this Contract or imposed by law, shall not be deemed a waiver of any right of either party to insist upon strict performance of the Contract.

20. **Warranties.** Contractor warrants that all materials and services delivered under this Contract shall conform to the specifications thereof. Mere receipt of shipment of the material or service specified and any inspection incidental thereto by PMGAA, shall not alter or affect the obligations of Contractor or the rights of PMGAA under the foregoing warranties. Additional warranty requirements may be set forth in this Contract.

21. **Indemnification.** To the fullest extent permitted by law, Contractor shall defend, save, indemnify, and hold harmless PMGAA, its agents, representatives, officers, directors, officials, and employees (collectively the "Indemnitees"), for, from and against all claims, damages, losses and expenses, including but not limited to attorney fees, court costs, expert witness fees, and the cost of appellate proceedings, relating to, arising out of, or alleged to have resulted from the Contractor's acts, errors, omissions, or mistakes relating to Contractor's services under this Contract.

22. **Right to Assurance.** Whenever one party to this Contract in good faith has reason to question the other party's intent to perform, the former party may demand that the other party give a written assurance of this intent to perform. If a demand is made and no written assurance is given within five (5) business days, the demanding party may treat this failure as an anticipatory repudiation with this Contract.

23. **Advertising.** Contractor shall not advertise or publish information concerning this Contract without prior written consent of PMGAA.

24. **Right to Inspect.** PMGAA may, at reasonable times, and at PMGAA's expense, inspect the place of Contractor's or any of Contractor's subcontractor's business, which is related to the performance of this Contract or related subcontract.

25. **Force Majeure.** In the event either party shall be delayed or hindered in or prevented from the performance of any covenant, agreement, work, service, or other act required under this Contract to be performed by such party ("Required Act"), and such delay or hindrance is due to causes entirely beyond its control such as riots, insurrections, martial law, civil commotion, war, fire, flood, earthquake, or other casualty or acts of God ("Force Majeure Event"), then the performance of such Required Act shall be excused for the period of delay and the time period for performance of the Required Act shall be extended by the same number of days in the period of delay. For purposes of this Contract, the financial inability of Contractor to perform any Required Act, including, without limitation, failure to obtain adequate or other financing shall not be deemed to constitute a Force Majeure Event. A Force Majeure Event shall not be deemed to commence until ten (10) days before the date on which the party who asserts some right, defense, or remedy arising from or based upon such Force Majeure Event gives written notice thereof to the other party. If abnormal adverse weather conditions are the basis for a claim for an extension of time due to a Force Majeure Event, the written notice shall be accompanied by data substantiating (a) that the weather conditions were abnormal for the time and could not have been reasonably anticipated and (b) that the weather conditions complained of had a significant adverse effect on the performance of a Required Act. To establish the extent of any delay to the performance of a Required Act due to abnormal adverse weather, a comparison will be made of the weather for the time of performance of the Required Act with the average of the preceding ten (10) years' climatic range based on the National Weather Service statistics for the nearest weather reporting station to the Premises. No extension of time for or excuse for a delay in the performance of a Required Act will be granted for rain, snow, wind, cold temperatures, flood, or other natural phenomena of normal intensity for the locality where the Premises are located.

26. **Inspection.** All material or service is subject to final inspection and acceptance by PMGAA. Material or service failing to conform to the specifications of this Contract will be held at Contractor's risk and may be returned to Contractor. If so returned, all costs are the responsibility of Contractor. Noncompliance shall conform to the cancellation clause set forth in this Contract.

27. **Exclusive Possession.** All services, information, computer program elements, reports, and other deliverables, which may be created under this Contract, are the sole property of PMGAA and shall not be used or released by Contractor or any other person except with prior written permission by PMGAA.

28. **Title and Risk of Loss.** The title and risk of loss of materials or services shall not pass to PMGAA until PMGAA actually receives the material or service at the Airport, unless otherwise provided within this Contract.

29. **Liens.** All materials, services, and other deliverables supplied to PMGAA under this Contract must be free of all liens and other encumbrances. Upon request of PMGAA, Contractor shall provide a formal release of all liens.

30. **Licenses.** Contractor shall maintain in current status all federal, state, and local licenses and permits required for the operation of the business conducted by Contractor as applicable to this Contract.

31. **Subsequent Employment.** PMGAA may cancel this Contract without penalty or further obligation in accordance with A.R.S. Section 38-511 if any person significantly involved in initiating, negotiating, securing, drafting, or creating the contract, on behalf of the PMGAA is or becomes, at any time while the Contract or any extension of the contract is in effect, an employee of, or a contractor to any other party to this Contract with respect to the subject matter of the Contract. Such cancellation shall be effective when the parties to this Contract receive written notice from PMGAA, unless the notice specifies a later time.

32. **Clean Up.** Contractor shall at all times keep Contract performance areas, including storage areas used by the Contractor, free from accumulation of waste material or rubbish and, prior to completion of the work, remove any rubbish from the premises and all tools, scaffolding, equipment and materials not property of PMGAA. Upon completion of any repair, Contractor shall leave the work and premises in clean, neat, and workmanlike condition.

33. **Patents.** Contractor shall defend, indemnify, and hold harmless PMGAA, its officers and employees from all liabilities, claims, damages, costs, or expenses, including, but not limited to attorneys' fees, for any alleged infringement of any person's patent rights or copyrights in consequence of the use by PMGAA, its officers, employees, agents, and other duly authorized representatives of tangible or intellectual property supplied to PMGAA by Contractor under this Contract.

34. **Records and Audit Rights.** Contractor's and all of its approved subcontractors' books, records, correspondence, accounting procedures and practices, and any other supporting evidence relating to this Contract, including the papers of all Contractor and subcontractor employees that work on the Contract (all the foregoing collectively referred to as "Records"), must be open to inspection and subject to audit and/or reproduction during normal working hours by PMGAA. PMGAA is entitled to evaluate and verify all invoices, payments or claims based on Contractor's and its subcontractor's actual costs (including direct and indirect costs and overhead allocations) incurred or units expended directly in the performance of work under this Contract. For any audit under this Section, Contractor and its subcontractors hereby waive the right to keep such Records confidential. PMGAA is entitled to access to these Records from the effective date of this Contract for the duration of the work and until five years after the date of final payment by PMGAA to Contractor under the Contract. During normal working hours, PMGAA is entitled to access to all necessary Contractor and subcontractor facilities and shall be provided adequate and appropriate workspace, in order to conduct audits under this Section. PMGAA shall give Contractor or subcontractors reasonable advance notice of intended audits. Contractor shall require its subcontractors to comply with the provisions of this Section by including its requirements in all subcontracts related to this Contract.

35. **E-Verify Requirements.** To the extent applicable under A.R.S. § 41-4401, Contractor and its subcontractors warrant compliance with all federal immigration laws and regulations that relate to their employees, and compliance with the E-Verify requirements under A.R.S. §23-214(A). Contractor's or its subcontractors' failure to comply with such warranty shall be deemed a material breach of this Contract and may result in the termination of this Contract by PMGAA. PMGAA shall have the right to inspect the papers of Contractor's and any of Contractor's subcontractor's employee who works on this Contract to ensure the Contractor is complying with this paragraph.

EXHIBIT F – OVERVIEW MAP OF FACILITIES

EXHIBIT G – MINIMUM CLEANING FREQUENCIES BY FACILITY

Airport Terminal Building:

1. Charles L. Williams Terminal Complex (Airport Terminal Building)
   Approximate cleaning square footage: 89,000 square feet

Service Tasks	Frequency
General Cleaning	Daily
Emptying Trash & Recycle Receptacles	Daily
Restock Supplies	Daily
Restroom Maintenance	Daily
Floor Tasks	**Frequency**
Sweep & Mop/Scrub	Daily
Hard Floor – Burnish	Weekly
Hard Floor – Refinishing	Twice Annually
Carpet – Extraction	Quarterly
Carpet – Spot Cleaning	As needed
Specialty Tasks	**Frequency**
High Reach Cleaning	Annually
HVAC Cleaning	Quarterly
Pet Waste Stations	Daily

Day Porter Tasks	Frequency
General Cleaning	Continuous
Emptying Trash & Recycle Receptacles	Continuous
Restock Supplies	Continuous
Restroom Maintenance	Continuous

2. TSA Space (Within the Airport Terminal Building) – Service Window: Monday – Friday, 10pm to 3am
   Approximate cleaning square footage: 1,000 square feet (<u>included</u> in the overall 89,000 Terminal sq ft above)

Service Tasks	Frequency
General Cleaning	Daily
Emptying Trash & Recycle Receptacles	Daily
Restock Supplies	Daily
Restroom Maintenance	N/A
Floor Tasks	**Frequency**
Sweep & Mop/Scrub	Daily
Hard Floor – Burnish	Monthly
Hard Floor – Refinishing	Annually
Carpet – Extraction	Annually
Carpet – Spot Cleaning	As needed
Specialty Tasks	**Frequency**
High Reach Cleaning	N/A
HVAC Cleaning	Quarterly
Pet Waste Stations	N/A

3. TSA Bag Make-up (Terminal) – Service Window: Monday – Friday, 10pm to 3am
   Approximate service square footage: 2,500 square feet (included in the overall 89,000 Terminal sq ft above)

Service Tasks	**Frequency**
General Cleaning	N/A
Emptying Trash & Recycle Receptacles	Daily
Restock Supplies	N/A
Restroom Maintenance	N/A
Floor Tasks	**Frequency**
Sweep & Mop/Scrub	Daily
Hard Floor – Burnish	N/A
Hard Floor – Refinishing	N/A
Carpet – Extraction	N/A
Carpet – Spot Cleaning	N/A
Specialty Tasks	**Frequency**
High Reach Cleaning	N/A
HVAC Cleaning	Quarterly
Pet Waste Stations	N/A

Airport Campus Buildings:

	Gateway Aviation Center	CBP Office	Badging Office	Airport Admin - Public	Airport Admin - Secure	Air Traffic Control Tower	Airport Maintenance Building	Fuel Storage Facility	Hangar 46	Hangar 32	Car Care Facility	Lynn Kusy Park
Service Tasks												
General Cleaning	Daily	Daily	Weekly	Daily	Weekly	Daily	Daily	Daily	Daily	Weekly	Weekyl	N/A
Emptying Trash & Recycle Receptacles	Daily	Daily	Weekly	Daily	Weekly	Daily	Daily	Daily	Daily	Weekly	Daily	Daily
Restock Supplies	Daily	Daily	Weekly	Daily	N/A	Daily	Daily	Daily	Daily	Weekly	Daily	N/A
Restroom Maintenance	Daily	Daily	N/A	Daily	N/A	Daily	Daily	Daily	Daily	Weekly	Daily	N/A
Floor Tasks												
Sweep & Mop/Scrub	Daily	Daily	N/A	Daily	N/A	Daily	Daily	Weekly	Weekly	Weekly	Daily	N/A
Hard Floor – Burnish	Weekly	Weekly	N/A	N/A	N/A	N/A	N/A	N/A	N/A	N/A	N/A	N/A
Hard Floor - Striping and Refinishing	Annually	Annually	N/A	N/A	N/A	N/A	N/A	N/A	N/A	N/A	N/A	N/A
Carpet – Extraction	Quarterly	N/A	Semi-Annually	Semi-Annually	Annually	N/A	N/A	N/A	N/A	Annually	N/A	N/A
Carpet – Spot Cleaning	As needed	N/A	As needed	As needed	As needed	As needed	N/A	N/A	N/A	As needed	N/A	N/A
Specialty Tasks												
High Reach Cleaning	N/A	N/A	N/A	Annually	Annually	N/A	N/A	N/A	N/A	N/A	N/A	N/A
HVAC Cleaning	Quarterly	Quarterly	Quarterly	Quarterly	Quarterly	Quarterly	Quarterly	Quarterly	Quarterly	Quarterly	Quarterly	N/A
Pet Waste Stations	N/A	N/A	N/A	N/A	N/A	N/A	N/A	N/A	N/A	N/A	Daily	Daily
Facility Porter												
General Cleaning	Continuous	Continuous	Continuous	Continuous	Continuous	Continuous	Continuous	Continuous	Continuous	Continuous	Continuous	Continuous
Emptying Trash & Recycle Receptacles	Continuous	Continuous	Continuous	Continuous	Continuous	Continuous	Continuous	Continuous	Continuous	Continuous	Continuous	Continuous
Restock Supplies	Continuous	Continuous	Continuous	Continuous	Continuous	Continuous	Continuous	Continuous	Continuous	Continuous	Continuous	Continuous
Restroom Maintenance	Continuous	Continuous	Continuous	Continuous	Continuous	Continuous	Continuous	Continuous	Continuous	Continuous	Continuous	Continuous
Building Info												
Service Area Square Footage	10,600	660	600	3,250	10,000	1,300	3,550	400	440	5,000	60	N/A
Service Times due to facility restrictions	9pm - 5am	M,W,F (Business Hours)	7am-5pm M-Th		F-Su	12am - 5am						

EXHIBIT H – CONTRACTOR'S RFP SUBMITTAL

Contractor's Proposals, and the terms and conditions thereof, in response to Phoenix-Mesa Gateway Airport Authority's Solicitation 2021-021-RFP dated April 26, 2021, are incorporated herein by reference and made part of this Contract.

Phoenix-Mesa Gateway Airport Authority
5835 S Sossaman Road
Mesa, Arizona 85212-6014
www.gatewayairport.com

Board Action Item

Re: Resolution 21-28

To:	**Board of Directors**
From:	**Margi EvanSon, Operations & Maintenance Director**
Through:	**Scott Brownlee, Deputy Director/COO**
	J. Brian O'Neill, A.A.E., Executive Director/CEO
Subject:	**CIP 1022, Replacement Airfield Backhoe**
Date:	**July 20, 2021**

Proposed Motion
To authorize the purchase of one backhoe from Bingham Equipment Company, in an amount not to exceed $59,421.02

Narrative
FY22 approved capital plan includes replacement of one airfield backhoe.

This purchase replaces the existing 1997 Kubota backhoe, which is beyond the service life due to age and normal wear and tear. The backhoe is in need of upcoming repairs. The backhoe is utilized by the Airfield and Facilities Maintenance Departments for various projects and repairs.

PMGAA is a member of Sourcewell, a cooperative purchasing organization. Under Sourcewell, Bingham Equipment Company, in partnership with Kubota Tractor Company, was awarded Contract #062117-KBA and it is through this competitive selection that PMGAA will utilize Bingham Equipment Company to purchase the backhoe. This contract is available upon request.

Fiscal Impact
This purchase is included in the FY22 capital budget under project CIP 1022.

Attachment(s)
Quote

RESOLUTION NO. 21-28

WHEREAS, the Phoenix-Mesa Gateway Airport Authority ("Authority"), a joint powers airport authority formed pursuant to Arizona Revised Statute §28-8521 *et seq.* owns and operates the Phoenix-Mesa Gateway Airport ("Airport"); and

WHEREAS the Authority desires to authorize the purchase of one backhoe from Bingham Equipment Company, in an amount not to exceed $59,421.02.

NOW, THEREFORE, BE IT RESOLVED by the Board of Directors of the Authority as follows:

> **The Board of Directors of the Authority hereby authorizes the purchase of one backhoe from Bingham Equipment Company, in an amount not to exceed $59,421.02. This resolution also authorizes the Chair or Executive Director/CEO to make such additions, deletions, and changes as may be approved by the Chair or Executive Director/CEO, necessary to carry out the purposes and intent of this Resolution.**

Passed and adopted by the Authority this 20th day of July, 2021.

_____
John Giles, Chair

ATTEST:

_____
Misty Johnson, Clerk of the Board

APPROVED AS TO FORM:

_____
Jill Casson Owen, Attorney

Bingham
Bingham Equipment Company

1655 S. Country Club Drive
Mesa, Arizona 85210-6098
Phone (480) 969-5516
Fax (480) 969-0271
www.binghamequipment.com
Remit to: 1651 South Country Club Dr., Mesa, AZ 85210

Ship to: See Below

Invoice to: PHX-Mesa Gateway Airport
5835 S Sossaman Rd
Mesa AZ 85212

Branch		
01 - Mesa		
Date	Time	Page
06/18/2021	15:25:13 (O)	1
Account No.	Phone No.	Quote No.
WILLI023	4809887600	01 022935
Ship Via	Purchase Order	
Our Truck	QUOTE ONLY	
	999	
		Salesperson
Shaun Spilsbury		1SD

Sales Quote

Description ** Q U O T E ** EXPIRY DATE: 08/17/2021 Amount

Kubota L47TLB Tractor 4wd, 47.1 HP eng, 3 range high/low hydrotrans with backhoe craw model, 540 rpm rear pto, 4 postrops/fops canopy with frt and rear work light, horn, tilt wheel, backup buzzer, dlx. twist seat with swivel for backhoe operation, tool box, intellipanel gages, 27X10.5-15 6 ply (R4) frt. tires, 15-19.5 6ply (R4) , approx. 1 hrs,model year 2021, mfg. std. full warranty 24 mon. or 1500 hrs. 48326.46

****

LOADER
Kubota TL1300 loader attachment Rated Lift Capacity @ Bucket Center 2,200 lbs., Rated Breakout 4,531 lbs. Maximum Lift Height 113.9", Automatic Self Leveling Valve bucket level indicator rod, grill guard, SSL type Quick Coupler, Over All Weight 406 lbs mfg. std. 24 mon full warranty.

****

BACKHOE
Kubota BT1000B Backhoe attachment Heavy-duty, 4-Point Rigid Mount Quick-Attach Bucket Breakout Force 5,825 lbs., Dipper Stick Breakout Force 3,779 lbs., Dig Depth 10', (2 ft. SAE), Stabilizer spread-operating 89.3", Dedicated Boom Swing Pump, 2-Cylinder Trunion Type Swing, Backhoe auxiliary hydraulic kit (BT2383), mfg. std. 24 mon full warranty.

****

L47TLB	TLB	$53,674.00
ALR9192	F Tire 27X10.50-15R4	.00
ALR9195	R-Tire 15-19.5 R	.00
K7874A	18" Q.A Trenching Bucket	$1,138.00
TL1748	Bolt On Cutting Edge	$238.00
L8045	(2) Work Lights	$330.00
L9554A	Top N Tilt Kit	$882.00
L9553A	Rear Remote Hydraulics	$1,343.00

THANK YOU

SIGNED X _____

SIGNED X _____

The buyer represents that he owns the above Trade-in equipment free and clear of any encumbrance except that indicated payable to:_____
_____,
in the amount of: _____

SIGNED X _____
If other than the purchaser, signer represents he is an agent of and authorized to sign for purchaser.

STATEMENT CONCERNING WARRANTIES
Except for expressed warranties made by the manufacturer of goods, THERE ARE NO WARRANTIES, EXPRESSED STATUTORY OR IMPLIED, INCLUDING ANY IMPLIED WARRANTY OF MECHANTABILITY, WHICH EXTEND BEYOND THE DESCRIPTION ON THE FACE THEREOF. No warranty whatsoever is made on any used, second-hand, altered or rebuilt goods. Such goods are sold "AS IS".

Bingham
Bingham Equipment Company

1655 S. Country Club Drive
Mesa, Arizona 85210-6098
Phone (480) 969-5516
Fax (480) 969-0271
www.binghamequipment.com
Remit to: 1651 South Country Club Dr., Mesa, AZ 85210

Ship to: See Below

Invoice to: PHX-Mesa Gateway Airport
5835 S Sossaman Rd
Mesa AZ 85212

Branch		
01 - Mesa		
Date	Time	Page
06/18/2021	15:25:13 (O)	2
Account No.	Phone No.	Quote No.
WILLI023	4809887600	01 022935
Ship Via	Purchase Order	
Our Truck	QUOTE ONLY	
	999	
		Salesperson
Shaun Spilsbury		1SD

Sales Quote

Description ** Q U O T E ** EXPIRY DATE: 08/17/2021 Amount

K7543	Quick Attach Coupler	$989.00
L9467	(2) Rubber Shoe	$260.00
BT2382	Hydraulic Cylinder Guard	$177.00
K9059	48" Pallet Forks	$530.00
TL1765A	72" QC HD 72" Bucket	$1,121.00
L3961	3 Point Hitch Kit	$547.00
M1809	Pallet Fork Frame	$728.00
TL1300	Front Loader	.00
BT1000B	Backhoe Attachment	.00
Sub Total		$61,957.00
Sourcewell Discount		<13,630.54>
Total		$48,326.46

****

Stock #: 075617 Serial #: 1578440 2797.50
New LP HR2572
New LANDPRIDE HR2572 Scraper Hyd
Landpride 72" Hydraulic Retractable Scraper
Hitch: Cat. 1 Clevis-type
Roll-Formed Moldboard - 201/2" High, Double Thickness
3/4" x 21/2" Heat Treated Spring Steel Shanks
Heat Treated Dimpled-on Tips
Two 1/2" x 6" High Carbon, Heat Treated
Cutting Edges; Reversible & Replaceable
Rear Back Fill Blade
3/8" End Panels
Self Locking Down Position
Cylinder: 23/8" x 4" with Hose
Fits Land Pride Quick-Hitch

****

HR2572	Scraper Hyd	$3,730.00
82	Kubota Orange	$0.00
Sourcewell Discount		<932.50>
Total		$2,797.50

THANK YOU

SIGNED X _____

SIGNED X _____

The buyer represents that he owns the above Trade-in equipment free and clear of any encumbrance except that indicated payable to:_____
_____,
in the amount of: _____

SIGNED X _____
If other than the purchaser, signer represents he is an agent of and authorized to sign for purchaser.

STATEMENT CONCERNING WARRANTIES
Except for expressed warranties made by the manufacturer of goods, THERE ARE NO WARRANTIES, EXPRESSED STATUTORY OR IMPLIED, INCLUDING ANY IMPLIED WARRANTY OF MECHANTABILITY, WHICH EXTEND BEYOND THE DESCRIPTION ON THE FACE THEREOF. No warranty whatsoever is made on any used, second-hand, altered or rebuilt goods. Such goods are sold "AS IS".

Bingham
Bingham Equipment Company

1655 S. Country Club Drive
Mesa, Arizona 85210-6098
Phone (480) 969-5516
Fax (480) 969-0271
www.binghamequipment.com
Remit to: 1651 South Country Club Dr., Mesa, AZ 85210

Ship to: See Below

Invoice to: PHX-Mesa Gateway Airport
5835 S Sossaman Rd
Mesa AZ 85212

Branch		
01 - Mesa		
Date	Time	Page
06/18/2021	15:25:13 (O)	3
Account No.	Phone No.	Quote No.
WILLI023	4809887600	01 022935
Ship Via	Purchase Order	
Our Truck	QUOTE ONLY	
	999	
		Salesperson
Shaun Spilsbury		1SD

Sales Quote

Description ** Q U O T E ** EXPIRY DATE: 08/17/2021 Amount

****
Extended Warranties are added below;
2 Year Extension for the Tractor, Loader and Backhoe.
Factory Assembly $530, Dealer Assembly $531.25, Freight
Cost $815.00 and PDI $250.00.
****
All Pricing Is In Accordance With Sourcewell Contract
#040319 Kubota. Web Quote #2062458. Please include Web
Quote #2062458 on the PO.
****
Thank You For The Opportunity
Shaun Spilsbury
Municipal/Government Sales
602-980-5671
****

Sale Total: 51123.96

Miscellaneous Charges/Credits
==========

EXTENDED WARRANTY	Qty:	1 Price:	2950.00	2950.00
LABOR SALES		1	1311.25	1311.25
EQUIPMENT FREIGHT CHARGE		1	815.00	815.00

Subtotal: 56200.21
MARICOPA COUNTY TAX: 3220.81
Quote Total: 59421.02

Authorization: _____

THANK YOU

SIGNED X _____

SIGNED X _____

The buyer represents that he owns the above Trade-in equipment free and clear of any encumbrance except that indicated payable to:_____
_____,
in the amount of: _____

SIGNED X _____
If other than the purchaser, signer represents he is an agent of and authorized to sign for purchaser.

STATEMENT CONCERNING WARRANTIES
Except for expressed warranties made by the manufacturer of goods, THERE ARE NO WARRANTIES, EXPRESSED STATUTORY OR IMPLIED, INCLUDING ANY IMPLIED WARRANTY OF MECHANTABILITY, WHICH EXTEND BEYOND THE DESCRIPTION ON THE FACE THEREOF. No warranty whatsoever is made on any used, second-hand, altered or rebuilt goods. Such goods are sold "AS IS".

Customer
Equipment Delivery and Acceptance Check List

1) Limited Warranty: (if applicable) This product is the written guarantee by the manufacturer of the product, promising to repair or replace parts which have a defect in materials or workmanship. "Limited" means the warranty is for a specific period of time, and has certain other restrictions.
I have received my equipment owner's manual, have had the safe operation of the equipment explained, and understand it is my responsibility to fully read the operators manual.
Initial:_____

2) Extended Warranty: This product is the written guarantee by the manufacturer of the product, promising to repair or replace parts which have a defect in materials or workmanship, for a specific period of time beyond the time period of any basic warranty. This promise may also be that offered by other than the manufacturer of the product. I have had the applicable equipment warranty (if any) explained and understand its conditions and limitations.
I have been offered an Extended Warranty coverage, a copy of which offer is attached and I;
Accept;_____
Decline:_____

3) Property Damage Insurance: This product is the agreement between the named insured and a company providing this insurance in return for the payment of premium for each Notice of Insurance issued under authority of said insurers Master policy to provide coverage for the named insured and the retail purchaser or one involved in extended credit secured by the property described in the security instrument, for property described in the Declarations, subject to the Conditions and Exclusions the Notice of Insurance.
I have been offered Property Damage Insurance coverage, a copy of which offer is attached and I;
Accept;_____
Decline;_____

4) Preventive Service Maintenance Agreement: This product is the agreement of Bingham Equipment Company to perform specific maintenance service functions as prescribed by the manufacturer's periodic maintenance schedule on the property described in the attached agreement, in return for payment for the services. This agreement is "Limited" which means the agreement is for a specific period of time, and has certain other restrictions.
I have been offered a Service Maintenance policy on the equipment, a copy of which offer is attached and I;
Accept;_____
Decline;_____

5) Revolving Credit Account: This product is the offer to establish a revolving account for the purpose of extending credit to me as the applicant, subject to the provisions of the revolving credit agreement of the lender.
I have been offered either the CNH or Kubota Commercial Revolving account, and I;
Accept:_____
Decline:_____

6) Lo Jack: This product is a silent transmitter security devise which will be attached to a specific piece of equipment, which becomes activated by a routine stolen vehicle police report. Once the Lo Jack is activated the police can begin tracking and potentially recovering the stolen equipment.
I have been offered this product, and I;
Accept:_____
Decline:_____

7) GPS: This product will enable online monitoring of equipment engine hours, equipment location and other reports for routine maintenance, usage and other security needs. The first 3 months of service are included with a website user name and password. At the end of the trial period the user will have the option to continue service at the agreed upon monthly rate or discontinue service.
Accept:_____
Decline:_____

Phoenix-Mesa Gateway Airport Authority
5835 S Sossaman Road
Mesa, Arizona 85212-6014
www.gatewayairport.com

Board Action Item

Re: Resolution 21-29

To:	**Board of Directors**
From:	**R. J. Draper, P.E., LEED AP, CM Engineering & Facilities Director**
Through:	**Scott Brownlee, Deputy Director/COO**
	J. Brian O'Neill, A.A.E., Executive Director/CEO
Subject:	**Expansion of North Remote Aircraft Parking Apron Project – CIP 1229 – Ace Asphalt**
Date:	**July 20, 2021**

Proposed Motion

To authorize additional paving services with Ace Asphalt of Arizona, Inc. (Ace Asphalt) be added to the previous Board Approved North Remote Aircraft Parking Apron Project under CIP 1229, in an amount not to exceed $53,721.

Narrative

Due to the deteriorated condition of the existing infield pavement of the South Remote Aircraft Parking Apron (RON), and the increased demand for RON Parking, the Phoenix-Mesa Gateway Airport Authority staff is recommending an expansion of the Board approved Asphalt Rehabilitation of the North Remote Aircraft Parking Apron Project.

The proposed area for this additional RON parking is approximately 21,000 square feet and is located in the infield just south of Taxiway Victor and east of Taxiway Whiskey. Staff is requesting to have this apron parking area paved in conjunction with the North Remote Parking Area Project, as it will net a significant monetary savings by combining the South RON area into the original scope of the North RON.

PMGAA and Ace Asphalt are both participants of the Mohave Educational Services Cooperative (MESC) Purchasing Group. Under MESC, Ace Asphalt was awarded the Paving Contract #19P-ACE-0318, and it is through this competitive selection that PMGAA will utilize Ace Asphalt for paving services. This contract is available upon request.

A quote was obtained utilizing the MESC pricing as noted below:

Ace Asphalt of Arizona, Inc.	$53,721

Fiscal Impact

The additional funds for this project are requested to be included in the FY22 capital budget under CIP 1229 using Non-Grant funding.

Attachment(s)

Proposal, Map

RESOLUTION NO. 21-29

WHEREAS, the Phoenix-Mesa Gateway Airport Authority ("Authority"), a joint powers airport authority formed pursuant to Arizona Revised Statute §28-8521 *et seq.* owns and operates the Phoenix-Mesa Gateway Airport ("Airport"); and

WHEREAS the Authority desires to authorize additional paving services with Ace Asphalt of Arizona, Inc. (Ace Asphalt) be added to the previous Board Approved North Remote Aircraft Parking Apron Project under CIP 1229, in an amount not to exceed $53,721.

NOW, THEREFORE, BE IT RESOLVED by the Board of Directors of the Authority as follows:

> **The Board of Directors of the Authority hereby authorizes additional paving services with Ace Asphalt of Arizona, Inc. (Ace Asphalt) be added to the previous Board Approved North Remote Aircraft Parking Apron Project under CIP 1229, in an amount not to exceed $53,721. This resolution also authorizes the Chair or Executive Director/CEO to make such additions, deletions, and changes as may be approved by the Chair or Executive Director/CEO, necessary to carry out the purposes and intent of this Resolution.**

Passed and adopted by the Authority this 20th day of July, 2021.

John Giles, Chair

ATTEST:

Misty Johnson, Clerk of the Board

APPROVED AS TO FORM:

Jill Casson Owen, Attorney

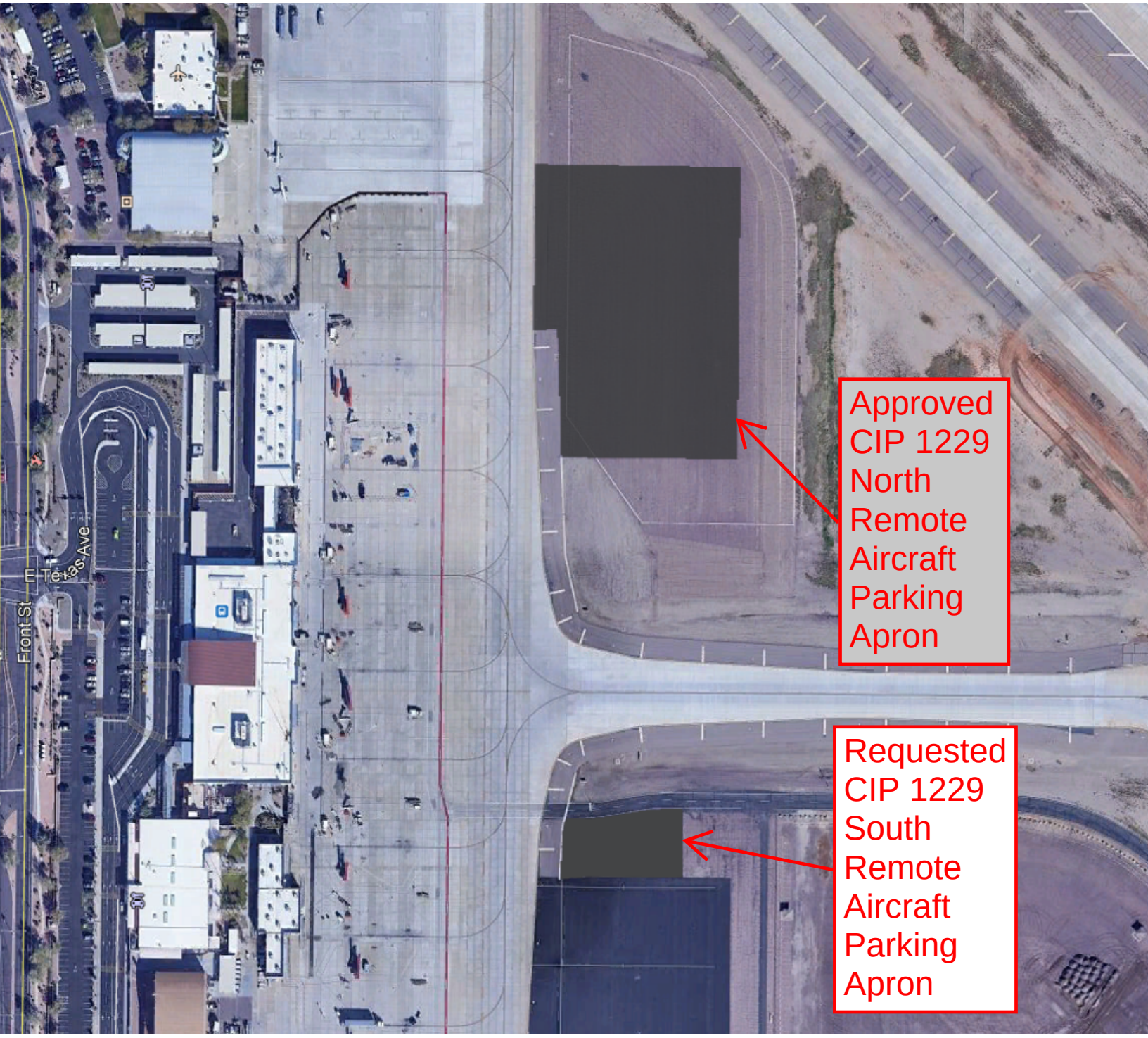
Front St
E Texas Ave
Approved CIP 1229 North Remote Aircraft Parking Apron
Requested CIP 1229 South Remote Aircraft Parking Apron

We're on it.

Arizona | California | Colorado | Nevada | New Mexico | Texas

May 18, 2021

SUBMITTED TO:
Phoenix Mesa Gateway Airport
Rich Adams

480-988-7520
6263 S Taxiway Cir
Mesa, AZ 85212

WORK TO BE PERFORMED AT:
Phx Mesa Gateway South Ramp
Aircraft Parking
6263 South Taxiway Circle
Mesa, AZ 85212

SUBMITTED BY:
Tad Peters
Account Executive

P: 602-320-6366
F:
E: peterst@aceasphalt.com

3030 South 7th St
Phoenix, AZ 85040

MOHAVE EDUCATIONAL SERVICE CO-OP BID

CONTRACT NUMBER: 19P-ACE-0318
SPECIAL NOTE:
The terms and conditions of Mohave Educational Services Co-Op Bid, Contract Number 19P-ACE-0318 will prevail over any and all terms and conditions stated in the proposal.
Prices are valid until July 31st, 2021.

SCOPE OF WORK

HEAVY MAINTENANCE OPT 1 21K

Bid Scope:

Move Ins: (1) Demo/Grade/Pave (1)

Dust Permit

Water Meter

Barricades (Ace Scope Only)

Saw Cut 3” Thick Asphalt as Necessary

Process Existing Grade (21,000 Square Feet)

Haul Off Demolished Material as Necessary

Fine Grade and Compact Existing Base Material (21,000 Square Feet)

Pave 2” Thick ½” Asphalt (21,000 Square Feet)

NOTE: This is for dust control only. Area being paved on native soil may hot withstand normal airfield traffic.

EXCLUSIONS, EXCEPT AS NOTED ABOVE: Bonds, Testing, Permits, Project Engineering, Survey and Layout Staking, Repair of Irrigation, Landscaping, Private Locators, Gate Loops, Weekend Work, Concrete, Subgrade Stabilization, Signs, Speed Bumps, Striping, Utility Adjustments, Wheel Stops, Asphalt Other than Described Above.

Proposal is valid only if signed and returned prior to 07/31/2021

Due to volatile materials pricing beyond our control, this scope of work is required to be completed by 9/30/2021. If for any reason this scope of work is not completed by 9/30/2021, then additional funds may be required.

Ace is not liable for drainage on projects with less than 1% fall. Due to existing conditions and matching elevations of concrete curbs, buildings and/or asphalt, we may not be able to raise or lower elevations in order to achieve proper slope to prevent standing water, therefore ponding of water may occur.

Ace Asphalt is not liable for damage to underground utilities not located by the owner prior to the start of work.

Due to the existing condition of asphalt on this project, it is reasonable to believe that wet subgrade soils may be present. The extent of this saturation (if any) cannot be completely assessed without removal of the existing asphalt surface. Should the subgrade be saturated, available solution alternatives will be proposed and additional funds and/or construction time may be required by the client to correct the saturation concerns.

Bid is based on existing asphalt being 2” thick, without fabric. If the existing asphalt varies from this thickness or fabric is encountered then the client may need to authorize additional funds.

Bid includes move-ins as listed above. Additional move-ins may require additional funds.

Work area is to be unobstructed prior to mobilization.

Quote is based on sales notes.

PAYMENT AND PERFORMANCE BOND

At Ace Asphalt, we don’t just build surfaces. We build trust. And we look forward to building yours.

PRICING

PHASES	
Heavy Maintenance Opt 1 21K	$50,317.17
Payment and Performance Bond	$654.12
SUBTOTAL	$50,971.29
Estimated Tax	$2,749.39
PROPOSAL TOTAL	**$53,720.68**

EXCLUSIONS, UNLESS NOTED ABOVE:
Bonds, testing, engineering. permits, taxes, soil sterilant, caulking/grouting, wire or fiber mesh, dowels, colored concrete, decorative finishes, utility adjustments, or landscaping/landscape irrigation repairs; Correction of drainage issues or pre-existing subgrade deficiencies; Crack seal adjacent to concrete sidewalks and curbing; Single coat sealing applications and cracks over 2" in width are excluded from warranty (per manufacturer specifications); Work performed on weekends may incur an additional charge.

NOTE: According to Arizona Law, any purchase order issued with an aggregate total over $100,000.00 will need to have a payment and performance bond issued for 100% of the work performed. For additional information, please contact Mike Jensen at 602-304-4023.
NOTE: When you decide to accept this proposal, please make your PO out directly to Ace Asphalt of Arizona, Inc., then fax your PO to Mohave Educational Services, Inc. at 928-718-3232 for verification of pricing and to Ace Asphalt at 602-304-2725. The Mohave contract number: 19P-ACE-0318, must appear on your PO. Once Mohave approves the PO for compliance, they will notify Ace Asphalt to proceed with the Work.
Sales Tax may vary based upon completion time of the project and any tax rate changes made by the state, city or county regulations.
TERMS: NET 30 DAYS AFTER COMPLETION OF WORK.
ACCEPTANCE: Ace Asphalt of Arizona, Inc., is authorized to proceed with the work as specified. Payment will be made according to the terms listed above.

Authorized Signature	Title
Print Name	Date
Legal Property Owner Name	Invoice Addressee
Scheduling Contact	Invoice Mailing Address

TERMS AND CONDITIONS

General Conditions

All surfaces to which material is to be applied shall be in a condition that is similar to the time at which the project was bid. Customer shall notify Ace in advance when the site will be ready for the work to be performed, and shall give free and unobstructed access so that the work to be performed hereunder can be commenced promptly, and that once begun, may be completed without delay. Customer agrees to pay Ace its reasonable charges for delays caused by Customer. Towing of vehicles, if necessary, shall be the responsibility of Customer.

Ace Asphalt is not responsible for making any site conditions or improvements ADA compliant unless directed by the customer to do so. If directed by the Customer, Ace Asphalt will make the recommended changes and additional charges may apply. Ace Asphalt also recommends the use of a certified ADA consultant for site evaluations and recommendations as required by Federal and State laws.

Customer is solely responsible for maintaining its properties in full compliance with the ADA and agrees to indemnify and hold Ace Asphalt harmless from and against any and all liability, claims, damages or expense, including attorneys fees, relating in any way to ADA requirements or issues.

Traffic control will be provided by Ace unless otherwise specified. It shall become the responsibility of Customer to maintain barricades and/or closures if required after Ace's personnel leave the site.

A water supply source shall be furnished by Customer for Ace’s use on this project.

Ace does not assume responsibility for any utility lines such as water, electric, sprinkler, etc., which may lie within eighteen inches (18") of the surface. Layouts of locations must be furnished to Ace if such lines are known to exist. Failure to furnish information in this regard will cause Customer to carry responsibility in case of any damage and repairs to such lines.

Customer shall be represented by one spokesperson, who shall have the authority to accept work performed, authorize and sign for any additions or changes desired, and will be available for consultation with Ace's representative.

Customer grants permission to Ace to create photos or videos of the site for use in promotion of its business services.

Taxes are computed for the locality in which the work is performed at the time the project is invoiced. Taxes can be waived, by law, only upon receipt of an exemption certificate that has been properly executed by responsible party to this contract.

Ace reserves the right to submit progress billings to Customer on a weekly, bi-weekly, or monthly basis. Customer agrees to pay progress billings in accordance to our terms and conditions.

Indemnification

Ace maintains adequate insurances and shall indemnify and hold harmless Customer, Owner, and agents and employees of any of them from any claims, damages, losses and expenses arising out of or resulting from performance of the Work to the extent caused by the negligent acts or omissions of Ace or anyone for whose acts Ace may be liable.

Warranty

The work proposed herein is covered by a 30 month warranty on workmanship. Normal wear and tear, abuse, accidental damage, and acts of God are excluded.

Disputes

If Customer objects to any portion of the work, Customer will so notify Ace within seven (7) calendar days, identify the cause of disagreement, and pay when due that portion of the invoice not in dispute. The parties will immediately make every effort to settle the disputed portion of the invoice.

The parties hereby agree that, in any legal action arising from this Agreement, venue for the action may properly be placed in the county of the Ace office that issued this contract. The parties acknowledge that they are hereby voluntarily and knowingly relinquishing and waiving any rights they may have to establishing venue in any other county. This Agreement shall be in accordance with and governed by the laws of the state of Arizona. If

a court finds that any provision of this Agreement is not valid or should not be enforced, that fact by itself will not mean that the rest of this Agreement will not be valid or enforced. Therefore, a court may enforce the rest of the provisions of this Agreement even if a provision of this Agreement may be found to be invalid or unenforceable.

Our Commitment to the Environment

Ace believes in employing sustainable practices that are both socially responsible and commercially sound. From material recycling strategies to pollution prevention initiatives, we are committed to minimizing our environmental impact while improving the well being of the communities we serve.

Confidentiality

The information in this document is privileged and confidential. No part of this document may be reproduced and/or distributed to anyone other than the recipient listed on this document without written permission from Ace.

Phoenix-Mesa Gateway Airport Authority
5835 S Sossaman Road
Mesa, Arizona 85212-6014
www.gatewayairport.com

Board Action Item

Re: Resolution 21-30

To: Board of Directors
From: R. J. Draper, P.E., LEED AP, CM Engineering & Facilities Director
Through: Scott Brownlee, Deputy Director/COO
J. Brian O'Neill, A.A.E., Executive Director/CEO
Subject: Alpha Apron Expansion Phase III Construction – Combs Construction
Date: July 20, 2021

Proposed Motion
To approve a Construction Contract with Combs Construction Company, Inc. (Combs Construction) for the construction of the Alpha Apron Expansion Phase III utilizing Passenger Facility Charge (PFC) funds in an amount not to exceed $8,512,421.73 under CIP 719 and approve an additional $2,900,000 increase to the FY22 Capital Budget due to increased construction costs.

Narrative
In FY2004 PMGAA completed a 37,800 square yard aircraft parking apron, which resulted in a private development along its edge. An expansion to that apron (Phase II) was constructed in FY2011 and is used for various federal government operations. Due to current demands, PMGAA needs additional apron space and is ready to move forward with the construction of the Alpha Apron Expansion Phase III.

The project will expand the existing Alpha Apron 480 feet to the North, while tying into adjacent Taxiways 'A' and 'V'. This project will include the construction of a Portland cement concrete apron pavement section, asphalt paved shoulders, taxiway/apron lighting, grading and drainage, pavement markings, utility design, and is anticipated to be constructed in multiple phases.

The Invitation for Bid (IFB), Solicitation 2021-017-IFB - Alpha Apron Expansion Phase III, was issued on May 13, 2021 and advertised in the Arizona Business Gazette on 5/13, 5/20, 5/27, 6/3 and 6/10/21. It was also posted on the AzAA, ACC, ACI-NA, and SWAAAE Websites as well as the Phoenix-Mesa Gateway Airport Authority Website. In addition, the IFB was emailed to a list of 95 prospective firms. The bid opening was held on June 17, 2021 and four (4) bids were received. Combs Construction submitted the lowest, responsive bid.

Bidder	Bid Amount ($) – Schedule I
Southwest Concrete Paving Company	$9,455,878.57
Combs Construction Company, Inc.	**$8,512,421.73**
J. Banicki Construction, Inc.	$9,312,532.09

Pulice Construction, Inc.	$8,675,309.00

Fiscal Impact

This CIP Project 719 was authorized as an amendment to the FY21 capital budget at the November 2020 Board meeting for $6,300,000 funded by PFC's. However, construction costs have increased, and additional PFC funds are requested. PMGAA is requesting that an additional $2,900,000 be added to the approved FY22 Capital Budget, bringing the grand total for this project to $9,200,000. The revised total project amount is included in the PFC program.

Attachment(s)

Construction Contract

RESOLUTION NO. 21-30

WHEREAS, the Phoenix-Mesa Gateway Airport Authority ("Authority"), a joint powers airport authority formed pursuant to Arizona Revised Statute §28-8521 *et seq.* owns and operates the Phoenix-Mesa Gateway Airport ("Airport"); and

WHEREAS the Authority desires to approve a Construction Contract with Combs Construction Company, Inc. (Combs Construction) for the construction of the Alpha Apron Expansion Phase III utilizing Passenger Facility Charge (PFC) funds in an amount not to exceed $8,512,421.73 under CIP 719 and approve an additional $2,900,000 increase to the FY22 Capital Budget due to increased construction costs.

NOW, THEREFORE, BE IT RESOLVED by the Board of Directors of the Authority as follows:

> **The Board of Directors of the Authority hereby approves a Construction Contract with Combs Construction Company, Inc. (Combs Construction) for the construction of the Alpha Apron Expansion Phase III utilizing Passenger Facility Charge (PFC) funds in an amount not to exceed $8,512,421.73 under CIP 719 and approve an additional $2,900,000 increase to the FY22 Capital Budget due to increased construction costs. This resolution also authorizes the Chair or Executive Director/CEO to make such additions, deletions, and changes as may be approved by the Chair or Executive Director/CEO, necessary to carry out the purposes and intent of this Resolution.**

Passed and adopted by the Authority this 20th day of July, 2021.

John Giles, Chair

ATTEST:

Misty Johnson, Clerk of the Board

APPROVED AS TO FORM:

Jill Casson Owen, Attorney

CONSTRUCTION CONTRACT

A. EFFECTIVE DATE:

This Contract is entered into by and between the Owner and the Contractor for construction of the Project and shall be effective as of _____, 20__.

B. OWNER:

PHOENIX-MESA GATEWAY AIRPORT AUTHORITY, a joint powers airport authority authorized by the State of Arizona
5835 South Sossaman Road
Mesa, Arizona 85212-6014
Phone: 480.988.7600
Fax: 480.988.7641

C. CONTRACTOR:

Combs Construction Company, Inc.
PO Box 10789
Glendale, AZ 85318
Phone: 602-237-4029
Fax: 602-237-4182

D. DESIGN ENGINEER:

Kimley-Horn and Associates,
7740 N. 16th St., Suite 300
Phoenix, AZ 85020
Phone: 602.944.5500
Fax: 602.944.7423

INSPECTION & MATERIAL TESTING

Consultant Engineering, Inc.
10625 N. 25th Ave, Suite 200,
Phoenix, AZ 85029
Phone: (602) 866-5090
Fax: (602) 866-5085

E. PROJECT:

Alpha Apron Expansion Phase III (Repackage)
Authority Solicitation No. 2021-017-IFB
Authority Project No. 719

F. WORK TO BE PERFORMED:

The intent of the Alpha Apron Phase III (Repackage) project is to expand the limits of the existing Alpha Apron to the northwest. The newly constructed apron will consist of an area 480-foot by 500-foot of Portland Cement Concrete pavement, with and adjacent Asphalt Concrete pavement shoulder, and tapered areas tying into Taxiway A (near the Taxiway A and Taxiway V intersection). Additionally, once the new apron area constructed there will be an issue of "direct access" from the new apron pavement to Runway 12R-30L (via existing Taxiway K). In order to mitigate this issue, as part of this project a portion of the existing Taxiway K (between Taxiway A and Taxiway B) will be abandoned and marked as un-useable, per current FAA Advisory Circular 150/5300- 13A Airport Design standards.

G. RECITALS:

The Owner intends to construct the Alpha Apron Phase III with airfield paving, lighting, drainage, structures, utilities, service roads and other items as necessary for the full and efficient use of the project in connection with Phoenix-Mesa Gateway Airport located in Mesa, Arizona. The Owner desires to contract for certain construction services and materials, and the Contractor desires to provide construction services and materials.

NOW, THEREFORE, intending to be legally bound and for valuable consideration, the receipt and sufficiency of which are acknowledged, the Owner and Contractor agree as follows:

H. AGREEMENTS:

ARTICLE 1 THE CONTRACT

The Contract consists of (1) this Construction Contract, (2) The Bidding Requirements and Agreement Documents, (3) the General Conditions to the Construction Contract, (4) General and Federal Provisions, (5) Special Provisions, (6) Drawings, Technical Specifications and other documents or amendments referenced in Article 7 of the Construction Contract, and (7) any amendments or modifications to the foregoing documents, including (a) a written amendment signed by both parties, (b) a Change Order, (c) a Change Directive, (d) Supplementary Instructions, or (e) a written order for a minor change in the work (collectively the "Contract").

ARTICLE 2 THE WORK

The Contractor shall execute the entire work described in the Contract and all work reasonably inferable as necessary to produce the results intended by the Contract.

ARTICLE 3 CONTRACT TIME

3.1 The Contractor and Owner recognize that time is of the essence of this Agreement and that Owner will suffer financial loss if the work is not Substantially Completed or Finally Completed within the times specified below.

3.2 The Contractor shall achieve Substantial Completion (as defined in Section 9.8.1 of the General Conditions of the Construction Contract and evidenced by a Certificate of Substantial Completion) of Schedule I no later than a total of **115 Calendar Days** from the date of issuance of the Notice to Proceed.

3.3 Final Acceptance of the work shall occur not more than thirty (30) calendar days after the Substantial Completion date.

3.4 The parties acknowledge and agree that it would be extremely difficult and impracticable to ascertain the damages that the Owner would incur should the Contractor fail to achieve, (1) Substantial Completion of the work by the milestone completion date(s), or (2) Final Acceptance of the work, as specified in this Article 3. Accordingly, if the Contractor fails to achieve (1) Partial Acceptance, (2) Substantial Completion, or (3) Final Acceptance of the work as specified in this Article 3, the Contractor shall be liable for and shall pay to the Owner liquidated damages for each calendar day of delay until the Contractor achieves (I) Partial Acceptance, (2) Substantial Completion, or (3) Final Acceptance of the work as the case may be. The liquidated damages shall be as follows:

The following Liquidated Damages apply:

1. Substantial Completion of Base Bid (All Phases, 115 Calendar Days) – $1,500 per Day

The following Liquidated Damages will also apply:

1. Final Completion within thirty (30) Calendar Days of Substantial Completion of the project – $1,500 per Day

The Owner shall have the right to retain any liquidated damages from payments due Contractor.

ARTICLE 4 CONTRACT SUM

4.1 The Owner shall pay the Contractor in current funds for the Contractor's performance of the Contract the Contract Sum of eight million five hundred twelve thousand four hundred twenty one and 73/100 Dollars ($8,512,421.73), subject to the additions and deductions as provided in the Contract.

4.2 Unit prices are set forth in the Bid Proposal attached hereto as Schedule I in Exhibit A. The unit prices include (I) all materials, equipment, labor, delivery, installation, overhead, profit, taxes, bond, insurance, and commissions, and (2) any other costs or expenses in connection with or incidental to the performance of that portion of the work to which such unit prices apply.

ARTICLE 5 PROGRESS PAYMENTS

Progress payments will be made in accordance with Article 9 of the *General Conditions* to the Construction Contract.

ARTICLE 6 FINAL PAYMENT

Final payment will be made in accordance with Article 9 of the *General Conditions* to the Construction Contract.

ARTICLE 7 CONTRACT DOCUMENTS

7.1 The Contract, except for modifications issued after the effective date of the Construction Contract, consists of the following documents:

7.1.1 The *Construction Contract*.
7.1.2 The Bidding Requirements and Agreement Documents
7.1.3 The *General Conditions* to the Construction Contract.
7.1.4 The *Special Provisions* to the Construction Contract
7.1.5 Plans, Specifications and Addenda attached.
7.1.6 All Exhibits to this Contract.
7.1.7 Bid Documents as follows:

A. Contractor Bid Proposal dated June 17, 2021.

B. Certified Copy of Resolution of Board of Directors dated January 6, 2021.

C. Contractor Statutory Bid Bond dated May 28, 2021.

D. Certificate of Insurability dated June 17, 2021.

E. Non-Collusion Bidding Certification signed by Ryan Combs and dated June 17, 2021.

F. Standard Certifications signed by Ryan Combs and dated June 17, 2021.

G. Bidders Qualification Statement dated June 17, 2021.

H. Subcontractor List dated June 21, 2021.

7.1.8 Amendments or modifications to the Contract, if any, to which the parties may agree during Contract performance.

7.2 There are no Contract Documents other than those listed above in this Article 7. The Contract Documents may only be amended, modified, or supplemented as provided in the *General Conditions*.

7.3 The Contract Documents are complementary, and a requirement called for by one is as binding as if called for by all. In resolving conflicts, if any, the Contract Documents shall be given the precedence that the Engineer determines is consistent with their intent and that will produce the intended result. When not in contradiction with this priority, the Contract Documents shall be given precedence in the order in which they are listed in this Article 7.

ARTICLE 8 MISCELLANEOUS

8.1 If any provision(s) of the Contract is/are invalid, illegal or unenforceable, all other provisions of the Contract shall nevertheless remain in full force and effect. If any Contract provision is inapplicable to any person or circumstance, that provision shall nevertheless remain applicable to all other persons and circumstances.

8.2 It is Contractor's and Owner's intent that all provisions of law required to be inserted or referenced in the Contract Documents shall be incorporated into them. If any provision of law is not inserted or referenced in the Contract Documents, or is inserted or referenced in improper form, the provision shall be considered inserted or referenced in proper form at no increase in Contract Price or Contract Time.

8.3 Contractor shall not sell, assign, transfer or otherwise convey any of its rights and shall not delegate any of its duties under this Contract without Owner's prior express written consent. In its sole discretion Owner may refuse to consent to any proposed assignment or delegation. Any attempted sale, assignment, transfer, conveyance or delegation in violation of this Paragraph 8.3 shall be void and shall relieve Owner of any further liability under the Contract Documents. If Owner consents in writing to an assignment, unless specifically stated to the contrary in the consent, the assignment shall not release or discharge Contractor from any duty or responsibility set forth in the Contract Documents.

8.4 Nothing contained in the Contract shall in any manner authorize, empower, or constitute Contractor, its subcontractors, or suppliers as agent(s) of Owner, authorize or empower Contractor, its subcontractors, or suppliers to assume or create any obligation or responsibility whatsoever, express or implied, on behalf of or in the name of Owner or authorize or empower Contractor, its subcontractors or suppliers to bind Owner in any manner or to make any representation, warranty, covenant, agreement, or commitment on Owner's behalf. Contractor shall perform all work under this Contract as an independent contractor. Only Owner of this Contract shall have rights to enforce any changes to this Contract.

8.5 This Contract shall be binding on Owner and Contractor and all of their respective successors, heirs, legal representatives, and, if Owner has consented to an assignment or delegation as provided in Paragraph 8.3, assigns and delegates.

8.6 This Contract supersedes all prior oral or written agreements, if any, between the parties and constitutes the entire, integrated agreement between the parties with respect to the work to be performed under the Contract Documents.

8.7 This Contract shall be governed by and construed in accordance with the laws of the state of Arizona, without giving effect to any rules governing conflict of laws.

8.8 The approval and continuation of this Contract is subject to the availability of funds either provided to, made available to, or appropriated by the Owner for this purpose. In the event that funds are not available or appropriated for the Owner's payment requirements under this contract for the goods and/or services to be provided hereunder, the Owner may terminate this contract by providing notice to the Contractor of the lack of the availability of funds.

Executed as of the Effective Date.

CONTRACTOR
COMBS CONSTRUCION COMPANY, INC

By: _____

Name: Ryan Combs

Title: President

Date: June 29, 2021

OWNER
PHOENIX-MESA GATEWAY AIRPORT AUTHORITY,
A joint powers airport authority authorized by the state of Arizona

By: _____

Name: J. Brian O'Neill, A.A.E.

Title: Executive Director/CEO

Date: _____

Phoenix-Mesa Gateway Airport Authority
5835 S Sossaman Road
Mesa, Arizona 85212-6014
www.gatewayairport.com

Board Action Item

Re: Resolution 21-31

To:	**Board of Directors**
From:	**R. J. Draper, P.E., LEED AP, CM Engineering & Facilities Director**
Through:	**Scott Brownlee, Deputy Director/COO** **J. Brian O'Neill, A.A.E., Executive Director/CEO**
Subject:	**Alpha Apron Expansion Phase III Construction – Construction Administration Services – Kimley-Horn & Associates – CIP 719**
Date:	**July 20, 2021**

Proposed Motion

To approve an Authorization of Services for Alpha Apron Expansion Phase III Construction Administration Services with Kimley-Horn and Associates (KHA) in an amount not to exceed $247,709.50 under CIP 719.

Narrative

In FY2004 PMGAA completed a 37,800 square yard aircraft parking apron, which resulted in a private development along its edge. An expansion to that apron (Phase II) was constructed in FY2011 and is used for various federal government operations. Due to current demands, PMGAA needs additional apron space and is ready to move forward with the construction of the Alpha Apron Expansion Phase III.

The project will expand the existing Alpha Apron 480 feet to the North, while tying into adjacent Taxiways 'A' and 'V'. This project will include the construction of a Portland cement concrete apron pavement section, asphalt paved shoulders, taxiway/apron lighting, grading and drainage, pavement markings, utility design, and is anticipated to be constructed in multiple phases.

In 2019, a Request for Qualifications, 2020-007-RFQ for On-Call Engineering Services was issued. Kimley-Horn and Associates (KHA) was one of two firms selected as the most qualified. In accordance with the terms of our agreement, C-2020007-A, KHA worked with Airport staff to refine a Scope of Work for Engineering Construction Administration Services for the Alpha Apron Expansion Phase III Construction. The cost for these services was negotiated based upon the contract fee schedule at a cost not-to-exceed $247,709.50.

Fiscal Impact

This CIP Project 719 was authorized as an amendment to the FY21 capital budget at the November 2020 Board meeting for $6,300,000 funded by PFC's. However, construction costs have increased, and additional PFC funds are requested. PMGAA is requesting that an additional $2,900,000 be added to the approved FY22 Capital Budget as part of the construction contract and will provide funding for these services. The revised total project amount is included in the PFC program.

Attachment(s)

Authorization of Services, Proposal

RESOLUTION NO. 21-31

WHEREAS, the Phoenix-Mesa Gateway Airport Authority ("Authority"), a joint powers airport authority formed pursuant to Arizona Revised Statute §28-8521 *et seq.* owns and operates the Phoenix-Mesa Gateway Airport ("Airport"); and

WHEREAS the Authority desires to approve an Authorization of Services for Alpha Apron Expansion Phase III Construction Administration Services with Kimley-Horn and Associates (KHA) in an amount not to exceed $247,709.50 under CIP 719.

NOW, THEREFORE, BE IT RESOLVED by the Board of Directors of the Authority as follows:

> **The Board of Directors of the Authority hereby approves an Authorization of Services for Alpha Apron Expansion Phase III Construction Administration Services with Kimley-Horn and Associates (KHA) in an amount not to exceed $247,709.50 under CIP 719. This resolution also authorizes the Chair or Executive Director/CEO to make such additions, deletions, and changes as may be approved by the Chair or Executive Director/CEO, necessary to carry out the purposes and intent of this Resolution.**

Passed and adopted by the Authority this 20th day of July, 2021.

John Giles, Chair

ATTEST:

Misty Johnson, Clerk of the Board

APPROVED AS TO FORM:

Jill Casson Owen, Attorney

EXHIBIT A

SCOPE OF WORK

Construction Support and Observation for Alpha Apron Expansion Phase III

A. PROJECT DESCRIPTION: Demand for aircraft-parking/hangar-buildings at the Phoenix-Mesa Gateway Airport (the Airport) created the need for additional apron areas to be constructed on the southwest side of the airfield. The "*Cargo Apron and Taxiway B*" project built the first phase of the current Alpha Apron area, followed by a second project which extended the apron to the south (referred to as the "*Alpha Apron Phase II*" project). Kimley-Horn provided the design of the Phase III apron expansion current FAA geometric standards, which included mitigating "direct access" from the new apron area to Runway 12R-30L, via existing Taxiway K, which is no longer allowed per current FAA design requirements.

The project will expand the existing Alpha Apron 480 feet to the North, while tying into adjacent Taxiways 'A' and 'V'. This project will include the construction of a Portland cement concrete apron pavement section, asphalt paved shoulders, taxiway/apron lighting, grading and drainage, pavement markings, utility improvements, and is anticipated to be constructed in two main phases. A general layout of the proposed Alpha Apron Expansion Phase III project is shown in the Figure **below**.

Construction is tentatively scheduled to start in September of 2021 with PFC funding and is anticipated to take **<u>115</u>** calendar days to construct. PMGAA will provide lead coordination and direction for Construction Administration services for the project.

General Project Layout

B. PROJECT SCOPE: the Kimley-Horn team will provide Construction Support and Observation for the construction of Alpha Apron Expansion Phase III and will perform the following specific tasks to complete this work:

1. **PROJECT ADMINISTRATION:** The following general tasks will be performed for the project:

   a) Provide project administrative tasks for support of our contract throughout the project.

   b) Provide monthly invoicing and attend general client meetings for the project.

   c) Will review, and coordinate activities, scheduling, and deliverables being performed by all sub-consultants.

2. **PRE-CONSTRUCTION:** The following general tasks will be performed for the project:

   a) The Kimley-Horn team will attend the pre-construction meeting and discuss items related to the contract, such as the items provided in the FAA Advisory Circular AC 150/5300-9A, Pre-Construction Conferences for Airport Grant Projects.

   b) Pre-Construction Submittal Review. Kimley-Horn will assist in the preparation of the initial Construction Management Plan (CMP). The contractor must submit his Quality Control Plan for inclusion into the Final CMP that will be reviewed and then submitted to FAA. Kimley-Horn will also review or take other appropriate action in respect to Contractor Quality Control plan and Contractor Airport Safety plan for compliance with project plans and specifications.

3. **CONSTRUCTION SUPPORT AND OBSERVATION:** The Kimley-Horn team will provide Construction Support and Observation services during construction of the project. Construction Support will be composed of site visits, weekly meeting participation, review of contractor submittals, review/respond to RFI's, review of contractor Change Orders requests and proposals. Observation will entail on-site observation/monitoring of construction materials, finishes, and workmanship and quality assurance materials testing. The Kimley-Horn team will also provide Quality Assurance Testing for the project.

   The following tasks will be performed for the project:

   a) *Review and Respond to Requests for Information (RFI's):* Kimley-Horn will respond to reasonable and appropriate Contractor requests for information and issue necessary clarifications and interpretations of the Contract Documents to PMGAA as appropriate to the orderly completion of Contractor's work. Any orders authorizing variations from the Contract Documents will be made by PMGAA.

   b) *Change Orders*. Kimley-Horn may recommend Change Orders to PMGAA, and will review and make recommendations related to Change Orders submitted or proposed by the Contractor or the PMGAA.

   c) *Shop Drawings and Samples*. Kimley-Horn will review or take other appropriate action in respect to submittals, shop drawings and samples and other data which Contractor is required to submit, but only for conformance with the information given in the Contract Documents. Such review or other action will not extend to means, methods, techniques, equipment choice and usage, sequences, schedules, or procedures of construction or to related safety precautions and programs.

   d) *Substitutes and "or-equal":* Kimley-Horn will, evaluate and determine the acceptability of substitute or "or-equal" materials and equipment proposed by Contractor in accordance with the Contract Documents, but subject to the provisions of applicable standards of state or local government entities.

   e) *Construction Observation:* The Kimley-Horn team will provide on-site review/monitoring of construction materials, finishes, and workmanship. Site visits and construction observation

are not intended to be exhaustive or to extend to every aspect of Contractor's work in progress. Observations are to be limited to spot checking, selective measurement, and similar methods of general observation of the Work based on the engineer's exercise of professional judgment. Based on information obtained during such visits and such observations, the engineer will evaluate whether the Contractor's work is generally proceeding in accordance with the Contract Documents. Kimley-Horn will keep the PMGAA informed verbally and by email of the general progress of the Work. Kimley-Horn shall notify the PMGAA as soon as practical, verbally and in a memorandum in electronic PDF format, of observed deviations and/or defects in materials, finish, equipment, systems, and workmanship. Kimley-Horn will not, during such meeting or on-site activities/visits or as a result of such observations of Contractor's work in progress, supervise, direct, or have control over Contractor's work, nor shall Kimley-Horn have authority over or responsibility for the means, methods, techniques, equipment choice and usage, sequences, schedules, or procedures of construction selected by Contractor, for safety precautions and programs incident to Contractor's work, nor for any failure of Contractor to comply with laws and regulations applicable to Contractor's furnishing and performing the Work. Accordingly, Kimley-Horn neither guarantees the performance of any Contractor nor assumes responsibility for any Contractor's failure to furnish and perform its work in accordance with the Contract Documents.

The Kimley-Horn team will complete daily observation logs documenting observed day-to-day construction activities, crews, weather conditions, subcontractors, quality control testing, quality assurance testing, and construction quantities. Daily observation logs will be kept on-site and distributed in electronic PDF format as requested by the PMGAA.

f) *Construction Progress Meetings:* Kimley-Horn team will attend up to **twenty-four (24)** weekly construction progress meetings for the duration of the construction season.

g) *Quality Acceptance Testing:* The Kimley-Horn team will provide materials quality acceptance testing in accordance with the Construction Management Program described herein, based on standards described in the project plans and specifications using ASTM or other approved standards, for the project.

h) *Review Quality Control Testing:* Kimley-Horn will review quality control testing results provided by the Contractor. The team will compare quality control test results against the project plans and specification standards and quality assurance test results and notify the PMGAA of any concerns.

i) *Disagreements between PMGAA and Contractor.* Kimley-Horn will, if requested by PMGAA, render written recommendation on a claim of PMGAA or Contractor relating to the acceptability of Contractor's work or the interpretation of the requirements of the Contract Documents pertaining to the progress of Contractor's work. In rendering such recommendation, Kimley-Horn shall be fair and not show partiality to PMGAA or Contractor.

j) *Substantial Completion.* The Construction Contract requires the Contractor to achieve Substantial completion of the Contract within 115 calendars days from the written notice to proceed. Kimley-Horn will attend a site visit to determine if the completed Work of the Contractor is generally in accordance with the Contract Documents.

k) *Final Notice of Acceptability of the Work.* Kimley-Horn will attend a final site visit to verify if the completed work of Contractor is generally in accordance with the Contract Documents.

l) *Record Drawings:* The Kimley Horn team will prepare record drawings in AutoCAD format for the project based on information provided by the Contractor regarding field changes recorded and will incorporate those changes into the construction plans. Kimley-Horn will prepare the record drawings in accordance with the Airports-GIS standards as identified in Chapters 3 and 5

of the FAA Advisory Circular 150/5300-18B and submit to the PMGAA in electronic AutoCAD format, PDF format, and one full size bound set of drawings.

m) *Limitation of Responsibilities.* Kimley-Horn shall not be responsible for the acts or omissions of any Contractor, or of any of their subcontractors, suppliers, or of any other individual or entity performing or furnishing the Work. Kimley-Horn shall not have the authority or responsibility to stop the work of any Contractor.

4. **POST CONSTRUCTION PHASE.** Kimley-Horn will provide assistance and consultation to the PMGAA for up to 30 calendar days following the project substantial completion. This will include site observation of any Contractor deficiencies in their work and assist the PMGAA in recommendations in correcting such Contractor deficiencies. Any assistance beyond the 30 days will be on a time and material basis.

C. CONTRACT TIME. Kimley-Horn will provide construction support and observation services as described above, during the designated construction contract period as approved and awarded by the Airport Authority. The services by Kimley-Horn shall include the base bid for a construction period of **115 calendar days** after the contract times commence to run as provided in the Contract Documents and all Work shall be finally completed and ready for final payment within **30 calendar days** thereafter. As-built (record drawings) will be completed two weeks after the approved red lines drawings have been received.

D. DELIVERABLES. Kimley-Horn will provide the following deliverables:

As-built (Record) Drawings:

- Review the contractor prepared redline record drawings; Review and incorporate field changes based on documented observations; As part of weekly site visits Conduct a field review to verify the completeness of the contractor prepared redline drawings and
- Prepare and submit one hardcopy full size set and one half size set of the final Record Drawings and electronic versions in both PDF and AutoCad formats.

E. KIMLEY-HORN'S COMPENSATION FOR SERVICES: Kimley-Horn shall be compensated for services according to a “NTE (Not to Exceed)" method of compensation with an allowance for expenses shall be used for this contract. Kimley-Horn’s total compensation for these construction Design Support Services shall be: **$ 247,710.**

The derivation of engineering fee for design services are attached to this authorization as Exhibits. Kimley-Horn shall not proceed with any additional requested services without written approval from the PMGAA.

F. ASSUMPTIONS: The estimated engineering fee is based on the assumptions attached hereto, see Exhibits attached. If the Contractor’s schedule requires additional hours or additional contract time, then additional man-hours and compensation will need to be negotiated.

ALPHA APRON EXPANSION PHASE III - CONSTRUCTION SUPPORT, OBSERVATION, AND QA TESTING
PHX-MESA GATEWAY AIRPORT
PHOENIX MESA GATEWAY AIRPORT AUTHORITY
DATE: June 2021

KIMLEY-HORN ASSOCIATES

Phoenix, Arizona

EXHIBIT I - DESIGN DOCUMENTS - ENGINEERING FEE
ALPHA APRON EXPANSION PHASE III - CONSTRUCTION SUPPORT

DERIVATION OF COST OF PROPOSAL FEE

1. DIRECT LABOR

TASK	DESCRIPTION	MANHOURS	TOTAL	EXTENDED TOTAL
001	Project Administration	64	3,420.80	
002	Pre-Construction	44	2,509.60	
003	Constrution Adminstration and Design Support	209	10,719.40	
004	Post Construction	84	3,804.00	
TOTAL DIRECT LABOR		401		$20,453.80

2. EXPENSES:

Expense (Printing and Mileage)		900.00	
TOTAL EXPENSES:			$900.00

3. CONSULTANTS:

CEI (Construction Administration/Inspection)		$95,055.00	
Quality Testing (QA Materials Testing)		$53,972.16	
Quality Testing (Lab Work and Expenses)		$30,977.00	
CR Engineers (Electrical Inspection)(DBE)		$0.00	
CR Engineers (Expenses)		$0.00	
Survey Verification (Trace, as needed)(DBE)		750.00	
TOTAL CONSULTANTS			$180,754.16

4. ENGINEERING FEE

TOTAL LABOR		20,453.80	
OVERHEAD (%)	193.59%	39,596.51	
FEE (% OF NET)	10%	6,005.03	
CONSULTANTS		180,754.16	
DIRECT EXPENSES		900.00	
TOTAL ENGINEERING FEE			**$247,709.50**

Estimated Construction Value	$	9,000,000.00
CA and Design Support Services % of Construction		2.75%
DBE Services as % of Total Fee		0.30%

ALPHA APRON EXPANSION PHASE III - CONSTRUCTION SUPPORT, OBSERVATION, AND QA TESTING
PHX-MESA GATEWAY AIRPORT
PHOENIX MESA GATEWAY AIRPORT AUTHORITY
DATE: June 2021

KIMLEY-HORN ASSOCIATES

Phoenix, Arizona

EXHIBIT II - DESIGN DOCUMENTS - ENGINEERING FEE
ALPHA APRON EXPANSION PHASE III - CONSTRUCTION SUPPORT

DERIVATION OF COST OF PROPOSAL FEE

1. DIRECT LABOR

TASK	DESCRIPTION	MANHOURS	TOTAL	EXTENDED TOTAL w/ OH
001	Project Administration	64	3,420.80	$11,047.44
002	Pre-Construction	44	2,509.60	$8,104.73
003	Constrution Adminstration and Design Support	209	10,719.40	$34,618.20
004	Post Construction	84	3,804.00	$12,284.98
TOTAL DIRECT LABOR		401	20,453.80	$66,055.34

2. EXPENSES:

Expense (Printing and Mileage)	900.00	
TOTAL EXPENSES:		$900.00

3. CONSULTANTS:

Sub-Consultants	
TOTAL CONSULTANTS	$180,754.16

4. ENGINEERING FEE

TOTAL ENGINEERING FEE	**$247,709.50**

ALPHA APRON EXPANSION PHASE III - CONSTRUCTION SUPPORT, OBSERVATION, AND QA TESTING
PHX-MESA GATEWAY AIRPORT
PHOENIX MESA GATEWAY AIRPORT AUTHORITY
DATE: June 2021

KIMLEY-HORN ASSOCIATES

Phoenix, Arizona

EXHIBIT III - DESIGN DOCUMENTS - ENGINEERING FEE
ALPHA APRON EXPANSION PHASE III - CONSTRUCTION SUPPORT

DERIVATION OF COST OF PROPOSAL FEE

1. Direct Salary Costs

Title	Hours	Labor Rate	Total Labor	EXTENDED TOTAL
Senior Project Manager (Steve Reeder)	119	68.60	7,065.80	
Principal Engineer (Mike Norby)		81.50		
Electrical Engineer (Dustin Colwell)	66	59.20	3,907.20	
Aviation Engineer (Jarrett Moore)	156	49.80	7,768.80	
CADD (Pat Crawford)	24	29.50	708.00	
Finance/Admin Manager (Andrew Hacker)	16	36.50	584.00	
Clerical (Jessica Jensen)	20	21.00	420.00	
Total Direct Salary Costs	401		$20,453.80	
2. Labor and General & Administrative Overhead				
Percentage of Direct Salary Costs By 193.59%			$39,596.51	
3. Subtotal of Items 1 and 2				**$60,050.31**
4. Fixed Payment				
10 % of Item No. 3:				**$6,005.03**
5. Direct Non-Salary Expenses				
Expense (Printing and Mileage)			900.00	
Total Direct Non-Salary Expenses				**$900.00**
6. Subcontract Costs				
Sub-Consultants				
Subtotal of subcontract Costs				**$180,754.16**
7. TOTAL ENGINEERING FEE				**$247,709.50**

ALPHA APRON EXPANSION PHASE III - CONSTRUCTION SUPPORT, OBSERVATION, AND QA TESTING
PHX-MESA GATEWAY AIRPORT
PHOENIX MESA GATEWAY AIRPORT AUTHORITY

ALPHA APRON EXPANSION PHASE III - CONSTRUCTION SUPPORT

DATE: June 2021

		Project Manager	Principal Engineer	Electrical Engineer	Aviation Engineer	CADD Tech	Finance/ Admin	Clerical	TOTAL MAN-HRS	TOTAL LABOR COST
001 Project Administration										
1	Project Administration-Client Coordination	8			2			4	14	$732
2	Contract Administration	6			2		4		12	$657
	- Office Administration Activities -Monthly accounting	12					8	4	24	$1,199
	- Sub-consultant coordination	10					4		14	$832
	Subtotal Task 001	36			4		16	8	64	$3,421
002 Pre-Construction										
1	Pre-Construction Conference	6		4	6				16	$947
2	~~Attend SRM review meeting~~	0								
3	Pre-Construction Activities	10		4	12			2	28	$1,562
	- Review Contractor's QC Program, Const. Mgt Plan, and Airport Safety Plan									
	Subtotal Task 002	16		8	18			2	44	$2,510
003 Constrution Adminstration and Design Support										
1	Submittal Review	12		20	24			2	58	$3,244
2	Attend Weekly Meetings /Site Visit (24 weeks)	25		12	50				87	$4,915
3	Attend Pre-Activity Meetings (4 max activities)	4			12				16	$872
4	Review/ Respond to RFI's	8		10	18				36	$1,488
5	QC/QA Testing results review	8			4				12	$199
	Subtotal Task 003	57		42	108			2	209	$10,719
004 Post Construction										
1	Final Close-out									
	- Final Change Order for Final Quantities	4		2	4			4	14	$676
	- Contract Close-out - Final Payment									
2	Record Drawings									
	- Production of As-Built Drawings	2		12	18	24		4	60	$2,536
3	Final Construction Report (review only)	4		2	4				10	$592
	Subtotal Task 004	10		16	26	24		8	84	$3,804
SUBTOTAL PHASE II DESIGN		119		66	156	24	16	20	401	20,454

AUTHORIZATION OF SERVICES
Kimley-Horn & Associates, AOS 20A-2105

The signing of this Authorization (Agreement) by Phoenix-Mesa Gateway Airport Authority (PMGAA) and Kimley-Horn & Associates, 7740 N. 16th Street, Suite 300, Phoenix, AZ 85020 ("Kimley-Horn"), authorizes Kimley-Horn to carry-out and complete the services described below in consideration of the mutual covenants set forth below:

1. **PROJECT**: Alpha Apron Expansion Phase III Construction Administration - CIP 719.

2. **SCOPE OF WORK**: Perform and provide Construction Administration Services related to expanding the existing Alpha Apron 480 feet to the North, while tying into adjacent Taxiways 'A' and 'V'. All services are to be performed in accordance with PMGAA Agreement C-2020-007-A, including the Standard Terms, and the attached detailed Scope of Work. Services shall be coordinated with and approved by PMGAA Authorized Representative prior to start of work.

3. **FEE FOR SERVICES**: The fee for services shall be based upon the attached Scope of Work, not-to-exceed Two hundred forty-seven thousand, seven hundred nine dollars and fifty cents ($247,709.50), of PMGAA non-grant funds without the express written approval of PMGAA.

4. **AVAILABILITY OF PROJECT FUNDING:** The approval and continuation of this contract is subject to the availability of funds provided to, made available to, or appropriated by PMGAA for this purpose. In the event that funds are not available or appropriated for PMGAA's payment requirements under this contract for the goods and/or services to be provided hereunder, PMGAA may terminate this contract by providing notice to the consultant of the lack of the availability of funds. The consultant acknowledges and agrees that one source of funding for this contract may be funds made available from the Federal Aviation Administration and/or Arizona Department of Transportation, and that this contract, its approval and continuation, may contingent on the availability of those funds being made to PMGAA.

5. **INCORPORATED:** The following documents are hereby incorporated with this Authorization of Services and made part thereof:

   ☑ PMGAA Agreement C-2020007-A dated December 17, 2019.

6. **ATTACHED:** The following documents are attached to this Agreement and are incorporated herein by this reference made part thereof:

   ☑ Scope and Fee Proposal dated June 2021.

PMGAA and Kimley-Horn acknowledge that they are in agreement with the terms and conditions as set forth in this Authorization.

APPROVED FOR PMGAA:

By:_____

Print: J. Brian O'Neill, A.A.E.

Title: Executive Director/CEO

Date:_____

ACCEPTED FOR Kimley-Horn & Associates:

By: Steve Reeder

Print: Steve Reeder, P.E.

Title: Senior PM/ vice President

Date: 06/29/21

Phoenix-Mesa Gateway Airport Authority
5835 S Sossaman Road
Mesa, Arizona 85212-6014
www.gatewayairport.com

Board Action Item

Re: Resolution 21-32

To:	**Board of Directors**
From:	**R. J. Draper, P.E., LEED AP, CM Engineering & Facilities Director**
Through:	**Scott Brownlee, Deputy Director/COO**
	J. Brian O'Neill, A.A.E., Executive Director/CEO
Subject:	**Terminal Annex Modernization Design Services – DWL Architects + Planners, Inc.**
Date:	**July 20, 2021**

Proposed Motion

To authorize a contract with DWL Architects + Planners, Inc. (DWL) for Terminal Annex Modernization Design Services, in an amount not to exceed $948,243 under CIP 1201, and to approve bringing this Terminal Annex Modernization Design and Construction Project (CIP 1201) forward to be included in the FY22 Capital Budget in the amount of $12,122,000.

Narrative

The Terminal Annex Modernization project has become necessary due to the age of the current modular facility, and the inefficient mechanical systems, deteriorated facility along with the increase in passenger traffic and additional airlines utilizing PMGAA. The current Annex is severely limited in its current configuration and the intent of this project is to modernize the facility and increase its capacity.

This project will include the replacement of the current Terminal Annex Modular Building with a new connected Terminal Concourse containing four (4) or possibly five (5) gates while maintaining the existing passenger service to the aircraft parking spots. Consultant shall be responsible for developing a design which incorporates PMGAA/FAA design considerations and must meet all City of Mesa codes and regulations, federal, state and PMGAA regulations.

The Notice of Request for Qualifications (RFQ), Solicitation 2021-027-RFQ was issued on April 13, 2021 and advertised in the Arizona Business Gazette on 4/15, 4/22, 4/29 and 5/6/21; it was also posted on the AzAA, ACC, ACI-NA, and SWAAAE Websites as well as the Phoenix-Mesa Gateway Airport Authority Website. In addition, the RFQ was emailed to a list of 61 prospective firms and included Small Business outreach. PMGAA Staff received four (4) Statements of Qualifications on May 13, 2021. The Evaluation Panel unanimously ranked DWL as the firm that best satisfied the requirements and had the best overall experience and qualifications for this project.

Fiscal Impact

This Design and Construction Project was originally planned to be in the FY24 Capital Budget but is being requested to be brought forward into the FY22 Capital Budget. We anticipate receiving FAA Grant Funding or will use PFC Funding for a portion of this project, under CIP 1201.

Attachment: Agreement

RESOLUTION NO. 21-32

WHEREAS, the Phoenix-Mesa Gateway Airport Authority ("Authority"), a joint powers airport authority formed pursuant to Arizona Revised Statute §28-8521 *et seq.* owns and operates the Phoenix-Mesa Gateway Airport ("Airport"); and

WHEREAS the Authority desires to authorize a contract with DWL Architects + Planners, Inc. (DWL) for Terminal Annex Modernization Design Services, in an amount not to exceed $948,243 under CIP 1201, and to approve bringing this Terminal Annex Modernization Design and Construction Project (CIP 1201) forward to be included in the FY22 Capital Budget in the amount of $12,122,000.

NOW, THEREFORE, BE IT RESOLVED by the Board of Directors of the Authority as follows:

> **The Board of Directors of the Authority hereby authorizes a contract with DWL Architects + Planners, Inc. (DWL) for Terminal Annex Modernization Design Services, in an amount not to exceed $948,243 under CIP 1201, and to approve bringing this Terminal Annex Modernization Design and Construction Project (CIP 1201) forward to be included in the FY22 Capital Budget in the amount of $12,122,000. This resolution also authorizes the Chair or Executive Director/CEO to make such additions, deletions, and changes as may be approved by the Chair or Executive Director/CEO, necessary to carry out the purposes and intent of this Resolution.**

Passed and adopted by the Authority this 20th day of July, 2021.

John Giles, Chair

ATTEST:

Misty Johnson, Clerk of the Board

APPROVED AS TO FORM:

Jill Casson Owen, Attorney

PHOENIX-MESA GATEWAY AIRPORT AUTHORITY

AND

DWL Architects + Planners, Inc.

FOR

Terminal Annex Modernization Design Services

CONTRACT NUMBER 20210272

CIP NUMBER 1201

The Phoenix-Mesa Gateway Airport is owned and operated by the Phoenix-Mesa Gateway Airport Authority (PMGAA), a joint powers airport authority authorized by the State of Arizona and consisting of the City of Mesa, City of Phoenix, City of Apache Junction, Town of Gilbert, Town of Queen Creek and the Gila River Indian Community.

Table of Contents

Section I - Consultant Services	3
Section II - PMGAA Responsibilities	3
Section III - Period of Service	3
Section IV – Key Personnel	4
Section V – Payments to the Consultant	4
Section VI – Alteration in Scope of Services	4
Section VII – Work Assignment Completion	4
Section VIII – Ownership of Documents	4
Section IX – Compliance with Laws	5
Section X – General Considerations	5
Section XI – No Kick-back Certification	5
Section XII – Suspension of Services	5
Section XIII – Times of Payments	5
Section XIV – Timely Review	5
Section XV – Dispute Resolution	5
Section XVI – Liability of Consultant	6
Section XVII – Laws and Regulations	6
Section XVIII – Archaeological Resource Protection	6
Section XIX – Insurance Requirements	6
Section XX – Notices	7
EXHIBIT A – Scope of Services & Fee Schedule	8
EXHIBIT B – Compensation	59
EXHIBIT C – Special Provisions	60
EXHIBIT D – PMGAA Standard Terms and Conditions	64
EXHIBIT E – Consultant's RFQ/RFP Submittal	69

Phoenix-Mesa Gateway Airport Authority, a joint powers airport authority authorized by the State of Arizona ("PMGAA") desires performance of the services more fully described in this **Contract Number 20210272** ("Contract") and the attached exhibits. DWL Architects + Planners, an Arizona Corporation ("Consultant"), with its principal offices located at 2333 North Central Avenue, Phoenix, Arizona, 85004, desires to perform these services.

Recitals

A. PMGAA requires the services as described in this Contract, including any and all exhibits and amendments, and Consultant is willing to provide these and other services under this Contract; and

B. PMGAA desires to contract with Consultant to provide services as noted herein.

Now therefore, in consideration of the recitals and the mutual covenants set forth below, PMGAA and Consultant agree as follows.

SECTION I – CONSULTANT SERVICES

The services to be performed by Consultant are specified in this Contract. PMGAA will not pay Consultant for any services that have not been authorized under the Contract. There is no guarantee of a minimum purchase of services.

The anticipated services to be provided by Consultant under this Contract shall generally include, but not be limited to, the following: Design Services for the Terminal Annex Modernization, as more specifically described in the detailed scope of services attached as **EXHIBIT A**, "Scope of Services & Fee Schedule."

PMGAA's authorized representative shall be the PMGAA Engineering and Facilities Director, or his/her duly authorized representative, and that he/she shall be the sole contact for administering this Contract.

All services provided by Consultant under this Contract must be performed in a manner consistent with that degree of care and skill ordinarily exercised by members of the same profession currently practicing under similar circumstances in Arizona. Consultant makes no other warranty, expressed or implied.

SECTION II – PMGAA RESPONSIBILITIES

PMGAA shall furnish Consultant, at no cost to Consultant, the following information or services for this Contract:

A. Access to copies of readily available maps, records, as-built drawings, benchmarks or other data pertinent to work assignments affiliated with this Contract. This does not, however, relieve Consultant of the responsibility of searching records for additional information, for requesting specific information or for verification of that information provided. PMGAA does not warrant the accuracy or comprehensiveness of any information or documents provided to Consultant.

B. In PMGAA's discretion and upon Consultant's reasonable request, access to staff for consultation with Consultant during the performance of this contract in order to identify the problems, needs, and other functional aspects of the work.

C. Prompt review of and feedback on Consultant's deliverables. PMGAA will advise Consultant concerning progress of PMGAA's review of the work, as needed.

SECTION III - PERIOD OF SERVICE

Consultant shall complete all work in accordance with the provisions of this Contract as amended.

All work initiated under this Contract must be completed on or before the expiration date of the Contract as amended.

The term of this Contract shall commence on July 21, 2021 and ends upon final completion and acceptance by PMGAA of the project, as defined by the Scope of Services and any amendments ("Base Term"), unless terminated, canceled or extended as provided in this Contract.

Consultant shall commence its services within seven (7) days of the written authorization by PMGAA. Consultant shall perform its services in a diligent manner and in accordance with this Contract.

SECTION IV – KEY PERSONNEL

The Consultant and its Sub-Consultants, as listed below, shall provide all services to be performed under this Contract.

Sub-Consultants:
Martin, White & Griffis Structural Engineers, Inc.
LSW Engineers Arizona, Inc.
Dibble Engineering
Logan Simpson Design, Inc.
Rider Levett Bucknall Ltd.

If additional Sub-Consultants are required by Consultant to perform any services listed under this contract, Consultant shall notify PMGAA prior to authorizing work by said Sub-Consultants. PMGAA may, at its sole discretion, accept or reject proposed Sub-Consultants.

SECTION V - PAYMENTS TO THE CONSULTANT

Consultant will be paid for work performed under this Contract plus any adjustments that have been approved in writing by PMGAA in accordance with PMGAA's Procurement Policy. Payments will be made in accordance with **EXHIBIT B**, "Compensation."

All services to be rendered by Consultant are subject to the terms of **EXHIBIT B**, "Compensation" attached hereto.

PMGAA does not guarantee any minimum or maximum fee during the Term of this Contract, and Consultant, in executing this Contract, shall not anticipate or require any minimum or maximum fee.

PMGAA shall pay Consultant in agreed upon installments for services authorized and rendered under this Contract at the completion of each work assignment, provided Consultant has satisfactorily completed the requested work. If any such work requires time in excess of 30 calendar days to complete, progress payment(s) may be made on invoices certified and approved by PMGAA.

SECTION VI - ALTERATION IN SCOPE OF SERVICES

For any alteration in the Scope of Services that would materially increase or decrease the Contract fee, the parties shall negotiate an amendment to the Contract to be executed by PMGAA and Consultant. No work shall commence on any amendment or change until the amendment has been approved by PMGAA and Consultant has been notified to proceed by PMGAA. No claim for extra work done or materials furnished by Consultant will be allowed by PMGAA, except as provided herein, nor shall Consultant do any work or furnish any materials not covered by this Contract unless the work is first authorized in writing by PMGAA and the change complies with PMGAA's Procurement Policy. Any work or materials furnished by Consultant without advance, written authorization will be at Consultant's own risk, cost, and expense. Without written authorization, Consultant shall make no claim for compensation for such work or materials furnished.

SECTION VII - WORK ASSIGNMENT COMPLETION

If, during the Term of this Contract, situations arise which prevent work completion within the allotted time, PMGAA may grant an appropriate time extension.

SECTION VIII - OWNERSHIP OF DOCUMENTS

Any documents, including all electronic copies thereof, prepared under or as a result of this Contract, shall be the property of PMGAA. To the extent necessary to effectuate such ownership, Consultant hereby assigns all right, title and interests to such documents to PMGAA. Consultant shall execute any separate contracts or documents, if any, which may be necessary to implement the terms of this Section.

All of Consultant's documents prepared under this Contract, including electronic files, are instruments of service. All of these documents become the property of PMGAA upon completion of the services and payment in full to Consultant. PMGAA may reuse or modify the documents, as it deems necessary, without Consultant's prior written authorization. PMGAA shall indemnify and hold harmless Consultant, its officers, directors, employees and

subconsultants (collectively, the "Consultant") against any and all damages, liabilities or costs arising from PMGAA's modification of documents produced by Consultant under this Contract unless Consultant authorizes the modification in writing.

SECTION IX - COMPLIANCE WITH LAWS

Consultant shall comply with all federal, state and local laws, local ordinances and regulations throughout the Term.

Consultant's signature on this Contract certifies compliance with the provisions of the I-9 requirements of the *Immigration Reform and Control Act of 1986* for all personnel that Consultant and any subconsultants employ to complete any work assignment.

PMGAA shall administer this Contract in accordance with PMGAA's Procurement Policy.

SECTION X - GENERAL CONSIDERATIONS

A. The failure of either party to enforce any of the provisions of this Contract or require performance of the other party of any of the provisions hereof shall not be construed to be a waiver of the provisions, nor shall it affect the validity of this Contract or the right of either party to enforce each and every provision.

B. The fact that PMGAA has accepted or approved Consultant's work shall in no way relieve Consultant of responsibility for the work under this Contract.

C. This Contract shall be governed by the laws of the state of Arizona, both as to interpretation and performance. Any action at law, suit in equity, or judicial proceeding for the enforcement of this Contract, or any provision thereof, shall be instituted only in the courts of the state of Arizona.

D. All exhibits to this Contract and any amendments to the Contract are incorporated into it.

SECTION XI - NO KICK-BACK CERTIFICATION

Consultant warrants that no person has been employed or retained to solicit or secure this Contract upon any agreement or understanding for a commission, percentage, brokerage, or contingent fee and that no member of the PMGAA Board of Directors or any employee of PMGAA has any interest, financially or otherwise, in Consultant's firm.

For breach or violation of this warranty, PMGAA may annul this Contract without liability.

SECTION XII – SUSPENSION OF SERVICES

Consultant shall, within five (5) business days upon receiving written notice from PMGAA, suspend, delay, or interrupt all or a part of the Scope of Services. Consultant shall resume the Scope of Services within five (5) business days of receiving written notice from PMGAA.

SECTION XIII – TIMES OF PAYMENTS

Consultant shall submit periodic invoices for any unbilled portion of the services actually completed. PMGAA shall review, certify, and approve or reject each invoice in whole or in part. PMGAA shall pay each approved invoice within 30 calendar days of the date that PMGAA approves the invoice.

SECTION XIV – TIMELY REVIEW

PMGAA will review Consultant's studies, reports, proposals, and other related documents and render any decisions required by Consultant in a timely manner. Notwithstanding these reviews, Consultant remains solely responsible for all of its deliverables and services under this Contract. By PMGAA's reviews, PMGAA does not assume any liability for or retained control over Consultant's work or Consultant's responsibility for the safety of its employees.

SECTION XV – DISPUTE RESOLUTION

All disputes between PMGAA and Consultant arising out of or relating to this Contract will be subject to the Dispute Resolution provisions as set forth in **EXHIBIT D**, "PMGAA Standard Terms and Conditions", attached hereto and incorporated herein by reference.

PMGAA and Consultant shall include a similar dispute resolution provision in all contracts with other contractors and consultants retained for the Project and shall require all other independent contractors and consultants to include a similar dispute resolution provision in all contracts with subcontractors, subconsultants, suppliers or fabricators retained by them.

SECTION XVI - LIABILITY OF CONSULTANT

To the fullest extent permitted by law, Consultant shall indemnify and hold harmless PMGAA, and its officers and employees from liabilities, damages, losses and costs, including reasonable attorney fees and court costs, but only to the extent caused by the negligence, recklessness or intentional misconduct of Consultant or other persons employed or used by Consultant in the performance of this Contract.

SECTION XVII - LAWS AND REGULATIONS

All federal, state, and local laws and regulations that relate to Consultant's services apply to Consultant's performance of this Contract throughout. These laws and regulations are deemed included in this Contract the same as though written out in full, especially the current applicable Federal Aviation Administration (FAA) rules and regulations associated with airport projects; pertinent Airport engineering standards; and local rules, regulations, and industry standards.

SECTION XVIII – ARCHAEOLOGICAL RESOURCE PROTECTION

While performing services under this Contract, Consultant may encounter a known or unknown archaeological site located at the Airport. If Consultant encounters what it believes to be an archaeological site, Consultant shall immediately notify PMGAA of the site's location and take all reasonable precautions to protect and preserve the site until PMGAA otherwise directs.

SECTION XIX INSURANCE REQUIREMENTS

A. Consultant shall procure and maintain for the duration of the contract insurance against claims for injuries to persons or damages to property which may arise from or in connection with the performance of the work hereunder by the Consultant, its agents, representatives, or employees.

B. All insurance policies required by this Contact, except *Workers Compensation* and *Professional Liability*, shall name PMGAA, its agents, representatives, officers, directors, officials and employees as Additional Insured.

C. Minimum Scope and Limits of Insurance. Coverage shall be at least as broad as:

   i. Professional Liability (Errors and Omissions): Insurance appropriate to the Consultant's profession, with limit no less than $1,000,000 per occurrence or claim, $2,000,000 aggregate.
   ii. Commercial General Liability: Insurance Services Office Form CG 00 01 covering Bodily Injury and Property Damage on an "occurrence" basis, including personal & advertising injury with limits no less than $1,000,000 per occurrence, $2,000,000 General Aggregate.
   iii. Auto Liability: ISO Form CA 00 01 covering any auto (Symbol 1), or if Consultant has no owned autos, hired, (Symbol 8) and non-owned autos (Symbol 9), with limit no less than $1,000,000 Combined Single limit per accident for bodily injury and property damage ($5,000,000 if operating in the Air Operations Area of the Airport).
   iv. Workers' Compensation: Statutory Limits as required by the state of Arizona, and Employer's Liability Insurance with limit of no less than $1,000,000 per accident for bodily injury or disease.

D. If the Consultant maintains higher limits than the minimums shown above, PMGAA requires and shall be entitled to coverage for the higher limits maintained by the Consultant. Any available insurance proceeds in excess of the specified minimum limits of insurance and coverage shall be available to PMGAA.

E. Additional insurance provisions. The insurance policies shall provide, or be endorsed to include, the following provisions:

   i. Notice of Cancellation: Each insurance policy required above shall provide that coverage shall not be canceled, except with notice to PMGAA.
   ii. Waiver of Subrogation: Consultant waives any right to subrogation. Consultant shall obtain an endorsement necessary to affect this waiver of subrogation from the insurer for all lines of

coverage required by this Contract, except *Workers Compensation* and *Professional Liability,* for claims arising out of the Consultant's work or service.

iii. Primary Coverage: For all claims related to this Contract, all of Consultant's insurance policies will be primary and non-contributory. Any insurance or self-insurance maintained by PMGAA, its officers, officials, employees, or volunteers will be in excess of Consultant's insurance and will not contribute with it.

iv. Deductibles and Self-Insured Retentions: Any deductibles or self-insured retentions must be declared to and approved by PMGAA. PMGAA may require the Consultant to provide proof of ability to pay losses and related investigations, claim administration, and defense expenses within the retention.

v. Acceptability of Insurers: Insurance is to be placed with insurers with a current A.M. Best's rating of no less than A, VII, unless otherwise acceptable to PMGAA.

vi. Claims Made Policies: No Claims Made policies (other than Professional Liability) will be accepted. For policies that provide claims-made coverage:

a) The Retroactive Date must be shown and must be before the date of the contract or the beginning of contract work.

b) Insurance must be maintained, and evidence of insurance must be provided for at least five (5) years after completion of the contract of work.

c) If coverage is canceled or non-renewed, and not replaced with another claims-made policy form with a Retroactive Date prior to the contract effective date, the Consultant must purchase "extended reporting" coverage for a minimum of five (5) years after completion of work.

vii. Verification of Coverage: Consultant shall furnish PMGAA with original certificates and amendatory endorsements or copies of the applicable policy language effecting coverage required by this clause. All certificates and endorsements are to be received and approved by PMGAA before work commences. However, failure to obtain the required documents prior to the work beginning shall not waive the Consultant's obligation to provide the required insurance. PMGAA reserves the right to require complete, certified copies of all required insurance policies, including endorsements required by these specifications, at any time.

viii. Subcontractors: Consultant shall require and verify that all subcontractors maintain insurance meeting all the requirements stated herein, and Consultant shall ensure that PMGAA is an additional insured on insurance required from subcontractors.

ix. Special Risks or Circumstances: PMGAA reserves the right to modify these requirements, including limits, based on the nature of the risk, scope of services, prior experience, insurer, coverage, or other special circumstances.

SECTION XX NOTICES

Any notice, report or information which may be or is required to be given under this Contract will be in writing and shall be sent by registered or certified mail, return receipt requested, postage prepaid, addressed as follows:

TO PMGAA: Phoenix-Mesa Gateway Airport Authority
Attn: Engineering and Facilities Director
5835 South Sossaman Road
Mesa, Arizona 85212

TO CONSULTANT: DWL Architects + Planners
Attn: Sandy Kukla
2333 North Central Avenue
Phoenix, AZ 85004

or to such other person(s) or address(es) as any such Party may designate from time to time by notice to the other Parties in accordance with this Section.

Executed as of the Commencement Date.

CONSULTANT
DWL Architects + Planners, Inc.
An Arizona Corporation

By: _____

Name: _____

Title: _____

Date: _____

PMGAA
PHOENIX MESA GATEWAY AIRPORT AUTHORITY, a joint powers airport authority authorized by the state of Arizona

By: _____

Name: J. Brian O'Neill, A.A.E.

Title: Executive Director/CEO

Date: _____

EXHIBIT A – SCOPE OF SERVICES & FEE SCHEDULE

The services to be performed by Consultant and the completion of related efforts are specified in the following Scope of Services & Fee Schedule agreed to by the parties.

For the services provided herein, PMGAA agrees to pay Consultant the not to exceed amount of $948,243.00

~~July 1, 2021~~
July 7, 2021, Revision 1

Mr. Bob Draper, PE, LEED AP
Engineering & Facilities Director
Phoenix Mesa Gateway Airport Authority (PMGAA)
5835 S. Sossaman Road
Mesa, AZ 85212-0919
T (480) 988-7705 | BDraper@gatewayairport.com

RE: Terminal Annex Modernization Design Services
2021-027-RFQ
Design and Engineering Services (Concept, SD, DD, CD)
DWL Project No. 2129.00

Dear Bob:

We are pleased for this opportunity to submit to the Phoenix-Mesa Gateway Airport Authority (PMGAA) an Architectural and Engineering Service scope and fee proposal for Concept Design, Schematic Design (SD), Design Development (DD), Construction Documents (CD) and Procurement Phase Services for a new Terminal Annex Modernization at Phoenix-Mesa Gateway Airport (AZA/IWA). The scope has been prepared in accordance with our understanding of the project based upon the 6/10/2021 meeting.

Project Scope & Description:

The goal of this project is to provide a replacement of the existing terminal annex since it has reached its useful life. The annex building is an assembly of 10 modular trailers constructed approximately 13 years ago. Per the scoping meeting on June 10, 2021, the goal is to provide a building similar to the Phase 3 building along with the recently constructed enclosed walkway. We understand the airport staff has the following program and project goals:

- Similar design aesthetic to the terminal building complex.
- Maintain passenger access to outdoor courtyard spaces.
- Approximately 15,000 square foot building.
- Four to five Gate holdroom spaces, with a preference for 5 gates, making a total 10 to 11 aircraft parking positions.
- Retail+ space that includes rough-in of water and sanitary sewer for concessionaire's use.
- Restrooms: men's, women's, family with adult changing, and a separate mothers/nursing area.
- Address existing security issues at the ticketing building. Airport/airline workers currently enter and exit from the existing terminal building and mix with sterile area passengers.

1. Site Design: The site will include portland cement concrete paving (PCCP), concrete paving, asphalt paving and associated striping where required. The team should utilize as much of the existing pavement as possible.
2. Site Grading Design: Site grading to comply with FAA and NFPA requirements. Due to passenger loading of Aircraft, grading to comply with accessibility standards (ADA / ANSI). In addition, the airport

has installed concrete jersey barriers to direct passengers to aircraft and separate passengers from the general service equipment (GSE) for safety. These barriers are to remain.

3. Storm Drainage Design: Modify and extend existing storm drain system. Only conflicting infrastructure should be removed. Extension of existing trench drain system. Provide minimum of 1% slope away from building for first 50' to position the trench drain per NFPA requirements. Remove existing oil separator for trench drain system, provide new separator at extension of system.
4. Water Service Design: Modify and extend existing water line system within project area. Only conflicting infrastructure should be removed. Extend water line around proposed building. Modify existing fire hydrants as required to meet the Fire Department requirements.
5. Sanitary Sewer Design: Modify and extend existing sanitary sewer system underneath future building. Only conflicting infrastructure should be removed. Provide new connection to existing sanitary sewer system to meet requirements of new building fixtures and retail requirements. A grease interceptor is not anticipated at this time.
6. Site Communications Duct Bank (C.A.S.S) Design: Existing duct bank routing can remain underneath the building provided, foundation systems span overtop/around the duct bank (Grade Beams) provided no loads are transferred to the duct bank. Extend the eastern apron duct bank south to the extents of the pavement limits to allow for future connections into the duct bank system.
7. Site Electrical System Design: Provide new electrical service and associated equipment to support the terminal annex building electrical loads.
8. Site Lighting Design: Remove apron lighting only if in conflict and relocate if required. Lighting levels to meet minimum illumination standards.
9. At aircraft parking positions 1A, 1B, 2 and 3, stub electrical conduits, feeders and disconnect for installation of airport provided Ground Power Units and Pre-Conditioned Air Units. Position 4 already has ground power and PC Air, therefore not required.
10. Airfield Site Design and layout to be coordinated with the airport and stakeholders. The critical design aircraft to be a FAA Aircraft Design Group III Aircraft, with a maximum size of the Airbus a320 and Boeing 737-800w. Airport has requested that Taxiway 'W' and the vehicle service road to be re-aligned to provide access continuously through the site for an Aircraft Design Specific 757 with winglets. Final airfield layout and striping to be provided and installed as part of this scope.
11. Fire lanes and fire apparatus: Evaluate and maintain to meet City of Mesa firefighting requirements and associated building codes.
12. Vehicle/ground service equipment and personnel access: Maintain access to Hangar 24 and the outbound make-up device.
13. Landscape courtyard design: Passenger access to airside landscape courtyards is to be maintained. Landscape plants and materials to match existing character of other landscape courtyards in the terminal complex. Exterior pet relief located in existing courtyard is to be relocated and provided in the new courtyard space.
14. The existing Fergie & Feller Field (Courtyard Space) to be reviewed for highest and best use. The space will be considered to change to a non-passenger area, used for service/back-of-house. A new location for the Fergie & Feller Monument will need to be provided.
15. Building Structural Systems: The expansion to utilize similar structural systems as established in the existing west terminal building complex. A combination of masonry bearing walls, steel columns and

steel framing to be utilized for the structural systems of expansion. The airport noted that alternate structural systems can be utilized, in order to increase speed of construction and if a similar aesthetic is maintained.

16. Exterior Architectural Design: Similar design aesthetic and material pallet to be utilized in the developed of the terminal annex replacement. Building envelope to comply with current IECC building codes. Airport noted to review for potential use of higher performance glazing compared to the existing glazing.

17. Interior Architectural Design: Similar design aesthetic and material pallet to be utilized in the development of the terminal annex replacement. Materials include integral colored ground polished concrete, carpet tile, painted gypsum board walls and soffits and acoustical panel ceiling system. The terminal expansion to be evaluated and sized based on the following:

    a. Holdroom sizing to be evaluated based on the critical aircraft Airbus a320 at 189 Seats per IATA ADRM / NCRP / FAA criteria.
    b. Furniture layouts with all new seating.
    c. Millwork Design of Gate Counter (Ticket Lift Area) and Technology Stations at each holdroom. Sizing to based on IATA ADRM / NCRP and FAA criteria.
    d. Restroom design to be evaluated based on peaking demand for the facilities.
    e. Building System Spaces: Electrical and Technology Rooms
    f. Airline Ramp Offices to replace the demolished line shack.
    g. Vanilla Shell Retail+ area

18. Mechanical building systems design: Similar system design for either extension of the existing chilled water system with water source heat pumps or packaged rooftop units. Airport preference is for rooftop packaged units due to maintenance challenges for access of heat pumps currently located in the ceiling plenum. Compatible system to integrate into the building management system. If water sourced heat pumps are utilized, a heat energy recover unit will be required.

19. Plumbing building systems design, match existing.

    a. Low-flow Automatic Sensor Water Closets
    b. Low-flow Automatic Sensor Urinals
    c. Low-flow Automatic Sensor Sinks
    d. High-Low Electric Drinking Fountains with integrated bottle fillers

20. Fire Protection Systems Design: Similar concept for fire sprinkler system to be utilized for the expansion. A new Fire Riser will be required to supply the system.

21. Electrical design:

    a. New electrical service / equipment fed to electrical room for distribution
    b. 2 x 4 LED Light Fixtures, similar design to the recent concessions expansion project
    c. In-floor electrical boxes to support electrical power/charging at the holdroom seating, to accommodate outlets at approximately every other seat.
    d. Charging at technology stations
    e. Emergency power. Determine capabilities and capacity of existing emergency generators to accommodate terminal expansion. Provide new emergency generator if required.

22. Fire alarm: Similar concept for fire alarm system to be utilized for the expansion. A new compatible fire alarm panel will be required.

23. Special systems/technology design: Compatible with the existing airport systems.

a. Surveillance Systems
b. Access Controls Systems
c. Paging System to be compatible with existing upgraded system.
d. Team to review existing systems are compliance with current ADA Standards and Industry Standards for hearing impaired passengers. Review Visual Paging System meets requirements. If not, potential for a hearing loop system.
e. Display monitors: FIDS, GIDS, Advertising and TV monitors

Design SERVICES:

The following complete design phases are included:

- Concept Development and Space Analysis
- Schematic Design (Basic Services)
- Design Development (Basic Services)
- Construction Documents (Basic Services)
- Procurement Phase Services (Basic Services)

DESCRIPTION OF TASKS:

1. **Project Coordination and Management**:

   a. Project Management/Administration - Manage assigned staff and sub-consultants, maintain contract and project files.

      1) Schedule – DWL shall provide a design schedule with the following preferred dates:
         - NTP – Start Design Services: July 21, 2021
         - Construction Documents Completion: March 4, 2022
         - Construction Start: Approximately April 18, 2022
         - Construction Completion: February 10, 2023

Preliminary Design Schedule	Total: 33 weeks
Existing Conditions Assessment and Programming	2 weeks
Concept Development /Space Analysis	3 weeks
Concept ROM Cost Estimating (CMAR & RLB)*	2 weeks
Owner Review/Cost Reconciliation*	2 days
Design Report (2 weeks concurrent w/ cost estimating	1 week
Schematic Design	5 weeks
Schematic Design Cost Estimating (CMAR & RLB)*	2 weeks
SD Cost Reconciliation*	2 days
Design Development (60%)	6 weeks
Design Development Cost Estimating (CMAR & RLB)*	2 weeks
DD Cost Reconciliation*	2 days
Construction Documents (100%)	9 weeks

*Dependent on CMAR/PMGAA

      2) Owner/Architect Meetings: Includes agenda and meeting notes, preparation, and distribution. See individual design phases below for meeting counts per phase beyond the kick-off meeting.

- Kick-off meeting with all appropriate PMGAA and stakeholders. All design team disciplines will be in attendance.

3) Design team/Consultant Meetings as required – Regularly scheduled internal coordination meetings between members of the consultant team. In-person meetings will be held at DWL's Phoenix office. Conference calls will be administered using Microsoft Teams.

2. **Existing conditions assessment/Programming:** The DWL team will review the as-builts, survey and the existing facility. The team will develop an inventory list of FFE and landscape plant material to be repurposed.

   a. DWL has the existing as-built documentation of the existing buildings and facilities in which our firms was previously involved. PMGAA will provide as-builts for other projects such as the outbound baggage system and associated canopy.
   b. PMGAA will provide maps for water, sewer and storm systems that the design team does not already have.
   c. Provide field site walk for civil, mechanical, electrical, special systems, landscape, cost estimating and architectural to assess existing facility and confirm requirements and use of spaces. Review operations of the facility along with required adjacencies. PMGAA to provide access to areas such as CASS vaults, utility rooms, etc.
   d. Inventory of fixtures, furniture, and equipment will be provided by the DWL team. Inventory includes assessment of power and data requirements. DWL assumes the existing airport seating will be salvaged to Owner.
   e. Inventory of landscape plant material (saguaros and large trees only) within the existing courtyard between the ticketing building and existing annex.
   f. A topographic survey and utility base mapping is included. Survey will include the following:
      1) Aircraft parking positions 1-5 capturing centerline of taxiway to the east and to the face of the ticketing terminal building to the west. See attached survey extents sketch.
   g. DWL will prepare the architectural background plans from the survey.
   h. Programming: DWL will develop the new program based on a space needs analysis of the existing facility, aircraft fleet mix and PMGAA project requirements.
      1) DWL will recommended holdroom and concession sizes with adjustment as appropriate for PMGA.
      2) The program is not expected to be overly complex, since the building has relatively few spaces including holdrooms, concessions, restrooms, mother's room, electrical and technology rooms. The program will include other project requirements such as fleet mix assumptions.
      3) A draft program will be submitted for review and comment. DWL will update the program and submit as final once the concept design is developed.

3. **Concept development/Space Analysis:** DWL will develop the design based on the program, new site and the existing facility. DWL will analyze the siting of the proposed facility with test fits of aircraft fleet, the apron parking, the building, landscape courtyards, the enclosed walkway and access to the existing hangar 24 as well as the outbound baggage. DWL will provide up to three initial layout options for review. One option will be selected by PMGAA to be further developed to approximately a 10% design.

   a. This is the opportunity to define the space relationships between the program components, their scale, facility operations, functionality, room sizes/requirements, use and occupancy, equipment requirements, utility and other infrastructure, maintenance/service/life cycle

costs/requirements, code/ADA compliance analysis, architectural finishes for all spaces, components, and adjacencies as well as the extent of demolition required. DWL shall refine the selected concept and present to PMGAA by means of 3D views, design concepts, elevations, and sketches, of sufficient detail to prepare the rough order of magnitude cost estimate to confirm the program.

b. Renderings:
   1) Three (3) semi-photorealistic renderings of this project will be provided.
   2) Views will be determined during this phase.
c. Code assessment of new facility.
d. Structural Review: Structural systems options will be researched, reviewed for feasibility, and presented for stakeholder review. The selected concept will be further developed to a 10% level and a narrative will be provided for cost estimating purposes.
e. Phasing: DWL will develop preliminary recommendations for project phasing in consideration of operations, existing facilities and construction.
f. Civil/Geotechnical/Building Systems Review:
   1) Civil Review: Civil review will include grading, underground utilities, initial pavement, and phasing recommendations for scoping purposes. 10% level drawings and a narrative will be provided.
   2) Mechanical/Plumbing/Electrical/Special Systems Review: The initial concepts will include recommendations for building systems.
      - Life Cycle cost analysis shall be provided for the Mechanical Systems. The design team will present the options to the stakeholders.
      - 10% level drawings and a narrative will be provided.
g. Meetings: (3) meetings are anticipated.
   1) On-site Presentations – (3) stakeholder meetings, or management presentations
h. Rough Order of Magnitude (ROM): A rough order of magnitude cost estimate will be developed for the selected concept.
   1) A first draft and final cost estimate is anticipated. These drafts shall be reviewed by PMGAA and the design team. A cost design log shall be maintained to track design and scope changes.
   2) The final ROM will be updated from PMGAA review comments and selected final layout option.
   3) The Cost estimate will be separated into components such as Airfield Site, Building Site and Building. The exact components will be defined during Concept Development.
   4) Furnishing, Fixtures and Equipment (FF&E): With input from the PMGAA Project Manager, DWL will recommend an allowance appropriate for this type of building.
   5) The Construction Manager at Risk (CMAR) is anticipated to be on board at the time of the ROM development. The CMAR will produce an independent cost estimate. The final ROM will be reconciled with the CMAR's estimate (provided it is complete prior to the start of the final ROM).
i. Design Report: Based upon the mutually agreed upon Program and Concept Design, schedule, and Rough Order of Magnitude, DWL shall prepare the final Concept Design Package. See Deliverable description below.

4. **Schematic Design (SD) 30%:** Based upon the mutually agreed upon Concept Design, schedule and construction budget requirements, the design team shall prepare, for approval by PMGAA, Schematic Design Documents. This phase of the project encompasses the refinement of the Schematic Design based on the selected concept design. This is the opportunity to refine the

facilities operations, functionality, and various components to a schematic level of detail, approximately 30%. The Schematic Design will include architectural plans, elevations, and sections as required to illustrate the scale and relationship of project components. Narratives and plans for the basis of design shall be provided for civil, landscape, structural, mechanical, electrical, plumbing, fire protection, and special systems. Draft specifications that identify major materials and systems and establish a general quality level are included in this phase for all disciplines.

a. Meetings: (3) meetings are anticipated. Three meetings are design and coordination meetings.
    1) Civil, Mechanical, Electrical, Technology Engineers as well as landscape are anticipated to attend one (1) of the meetings.
    2) Cost estimator is anticipated to attend 1 meeting.

b. Refinement of Building Code Analysis

c. Renderings: Update to the three renderings (from concept phase) will be provided.

d. A cost estimate shall be provided after the completion of the Schematic Design Package. The Cost estimate will be separated into Airfield Site, Building Site and Building. Cost estimating includes reconciliation with the CMAR's cost estimate.

5. **Design Development (DD) 60%:** Based upon the approved Schematic Design Documents and any adjustments authorized by PMGAA Aviation in the program, schedule or construction budget, the Design Team shall prepare Design Development Documents for approval by PMGAA. The Design Development documents shall consist of drawings and other documents to fix and describe the size and character of the Project as to architectural, civil, landscape, structural, mechanical, plumbing, fire protection, and electrical systems, materials and other applicable elements. Draft specifications that identify major materials and systems and establish a general quality level shall be included.

    a. Meetings: (3) meetings are anticipated. Two meetings are design and coordination meetings. One meeting is a page-turn meeting with DWL, PMGAA project team and stakeholders.
        1) Civil, Mechanical, Electrical, Technology Engineers as well as landscape are anticipated to attend one (1) of the meetings.
        2) Cost estimator is anticipated to attend 1 meeting

    b. A cost estimate shall be provided after the completion of the Design Development Package. The Cost estimate will be separated into Airfield Site, Building Site and Building. Cost estimating includes reconciliation with the CMAR's cost estimate.

6. **Construction Documents (CD) 100%:** Based upon the approved Design Development Documents and any further adjustments in the scope or budget authorized by PMGAA, the Design Team shall prepare Construction Documents.

    a. The 100% document package will be submitted to PMGAA and the CMAR for preparation of the GMP and owner review.

    b. The documents include drawings and specifications with sufficient detail to obtain building safety review approval by PMGAA.

    c. QAQC: An internal QAQC will be conducted via Bluebeam Studio, with an internal preliminary check-set for all engineering disciplines.

    d. Specifications: Specifications in book format shall be included.

e. Meetings: Three (3) meetings are anticipated. Two meetings are design and coordination meetings. One meeting is a page-turn meeting with DWL, PMGAA project team and stakeholders.

   1) Civil, Mechanical, Plumbing, Electrical, Technology Engineers as well as landscape are anticipated to attend one (1) of the meetings.

7. **Procurement Phase:** (new phase term used by AIA standard contracts in 2017, formerly named Bidding and Negotiation phase) This phase of the project occurs between the completion of CDs and the start of Construction, approximately six weeks for this project.

   a. RFI's and Substitution requests: DWL shall respond to substitution requests, RFIs and other clarifications from the bidders.

   b. Addenda: DWL shall prepare and coordinate addenda that need to be issued prior to Bid, such as legitimate RFIs and approved substitution requests.

   c. Conforming Set: DWL will assemble one conforming set that captures addenda, RFIs, corrections for the benefit of all parties for construction.

   d. Meetings: Two (2) meetings are anticipated.

<u>ADDITIONAL SERVICES</u>

8. **Interior Design Services:** Interior design will occur concurrently with the following design phases.

   a. Schematic Design (SD): This phase includes major furniture and equipment, with an identification of contractor and owner provided items. Using the inventory list the tenant shall identify items to be relocated.

   b. Design Development (DD): Finish types and grades of finish materials shall be established. DWL will provide two initial digital materials palette options and loose-lay samples for selections. We assume that a finish palette will be selected by PMGAA in the DD phase review period. This information is to be used for pricing purposes during the CD phase. This phase includes development of the initial furniture plan with new and relocated FF&E.

   c. Construction Documents (CD): Based on the selection during DD, DWL will provide a final digital materials board and a physical materials board. The final furniture plan will be included with the CDs sufficient for coordination of power and data. Furniture direct selections will be based on PMGAA furniture vendor's available manufacturers and a furniture binder will be prepared. DWL assumes the furniture is not included in the CMAR contract but will be procured by PMGAA directly with one vendor.

   d. Cost Estimates: The cost estimates for furniture will be determined by DWL in conjunction with the PMGAA selected furniture vendor. Detailed furniture pricing is not included in the cost estimator's scope; however, the cost estimator will include the amount in their summaries. Interior finishes and materials are included.

9. **Signage**: Construction documents for interior way-finding signage (non-illuminated) and exterior building gate signage is included as an additional service. The exterior signage is not specifically illuminated. The design theme and the final construction documents are included in this project. DWL will provide recommended sign message and locations to PMGAA. The airport shall review and comment on recommendations. This additional service assumes design and construction documents are concurrent with the base project scope. Because there is no anticipated access roadway or

parking lot design scope and minor airside service road modifications, we assume there will be limited traffic control signage. Temporary Construction signage is not included.

10. **Allowances:** DWL recommends a design allowance of $10,000 Services would be performed on a not-to-exceed time and material basis. Prior use of the allowance will require PMGAA written approval.

ASSUMPTIONS:

1. The construction budget is $10 million, which excludes FF&E.
2. The overall square footage of the new facility is +/- 15,000 SF.
3. The Construction Contract Delivery Method is CM at Risk and the contractor has not been selected.
4. This proposal assumes that all scope is to be documented in one submittal package.
5. Subconsultants included in this proposal. Please review their attached proposals for further scope details.
    a. MWG (Structural)
    b. LSW (Mechanical, Plumbing, Fire Protection, Electrical, Special Systems)
    c. Dibble (Civil, survey)
    d. Rider Levett Bucknall (Cost Estimating)
    e. Logan Simpson Design (Landscape)
6. PMGAA will provide Electrical Panel Load readings to the design team, which will allow analysis of the SRP service and its actual usage.
7. Value Engineering/Scope Reduction services are included if the RLB cost estimate is greater than 10% of the budget.
8. Construction documents are not submitted to City of Mesa Building Safety department, since PMGAA will provide their own building safety review and permit.
9. Reimbursables include project related expenses such as mileage, courier, web-based meetings, printing, and copying (in or out of office).

EXCLUSIONS:

In order to provide clarity and to prevent any misunderstandings, we want to identify items that are excluded from this proposal. If for any reason the Phoenix-Mesa Gateway Airport Authority requires these services, we can provide them for additional compensation.

1. Services from engineers or consultants not identified in this proposal and beyond this project's scope will not be provided.
2. Acoustics consultant, analysis, and engineering. Should a hearing loop or other hearing enhancement design become required, an Acoustic consultant may be necessary and an additional service.
3. Geotechnical Analysis (soils report): Because there is no Soils Report being performed, the design team will note previous Soils Report were performed at the site however will not recommend any soils preparation and edit a soils specification. The design team will not accept liability or take responsibility for geotechnical requirements for this project.
4. Tests or investigations requiring demolition of existing construction or other types of forensic investigation are not included in this proposal.
5. Construction Administration

6. Environmental and hazardous assessment.
7. Government permit and plan review fees.
8. LEED design and USGBC submission fees.
9. Water Supply Test. This will be procured and paid by CMAR
10. Multiple bid packages.
11. Construction Phasing documents.
12. Hydrant Fuel System.
13. Elevated Truck Dock and compactor. Truck Loading zone is anticipated.
14. Apron civil design beyond the limits of this project.
15. Travel outside the Phoenix Metropolitan area.
16. Renderings beyond three ($2,000 for first rendering, $1,500 for subsequent renderings)
17. Pre-set video beyond one (additional videos, such as birds-eye fly-overs or other walk-throughs will be estimated per occurrence)
18. Tenant Improvement design services.
19. Cost Estimating service at Construction Documents and Procurement phase.
20. Deliverables beyond those described below.

DELIVERABLES:

1. Concept Design Package (10%)
   - Concept level Site Plan, Floor Plans and 3d images
   - 11x17 Concept Design book w/ project description (narratives), conceptual Images, design drawings and appendix.
   - Concept Cost Estimate
2. SD Package (30%)
   - Schematic level Site Plan, Floor Plans, Elevations, Sections and 3D images
   - Table of Contents and 30% Draft Specifications
   - SD Cost Estimate
3. DD Package (60%)
   - Design Documents and select specification notes on drawings
   - 60% Draft Specifications
   - Finishes – Draft Digital materials board and loose-lay samples to a DD level
   - DD Cost Estimate
4. CD Package (100%)
   - Construction Documents and Specifications
   - Structural Calculations
   - Finishes- Final digital materials board
5. Conformed Set
   - Construction Documents that include Addendum associated with the final GMP.
   - Finishes – Final physical materials board
6. Furniture
   - Draft furniture selections
   - Final furniture selections (8.5x11 binder)
7. Procurement Phase
   - Addendum in response to RFIs and Substitution requests.

COMPENSATION:

We propose to provide the previously mentioned services as a Lump Sum Fee(s) as follows:

	Pre-Design ($)	Basic Services ($) (SD, DD, CD, PS)	Additional Services ($)	Discipline Total ($)
Architectural – DWL*	86,728	403,140	34,092	523,960
Structural Engineering – MWG	3,750	52,255		56,005
Mech./Plumbing/Elec. - LSW	13,480	139,820		153,300
Civil Engineering & Survey – Dibble	22,754	72,467	2,272	97,493
Landscape – Logan Simpson Design	3,528	21,867		25,395
Cost Estimating - RLB	7,750	31,000		38,750
Technology - LSW	4,320	36,020		40,340
Total Design Services				**$ 935,243.00**
Design Allowance				$ 10,000.00
Reimbursable Expenses**				$ 3,000.00

* DWL's personnel hourly rates are based on an Overhead Rate of 1.7335 and includes 10% profit.
**For this proposal we are estimating reimbursables for 6 half-size sets for each package.

See attached DWL estimated hourly breakdown and consultants' proposals for your review.

CONCLUSION:

We appreciate your consideration and the opportunity to submit this proposal. We look forward to working with you and the Phoenix-Mesa Gateway Airport Authority team. If you have any questions or require further explanation, please do not hesitate to contact me.

Sincerely,

DWL ARCHITECTS + PLANNERS, INC.

Sandra Kukla, AIA, LEED AP
President

cc: Michael Braun
Mary Ann Modzelewski
Shawn Filip
Anna Alexander

DWL ARCHITECTS + PLANNERS, INC.

PMGA Terminal Annex Modernization | 2021-027-RFQ

Concept, Schematic Design (SD), Design Development (DD), Construction Documents (CD), Procurement Phase

DWL Project No. 2129.00

COMPENSATION ESTIMATE Construction Budget: $10 M 07/07/2021 Revision 1

ARCHITECTURAL - Design Phase

Labor Hours

	Task Description	Principal 203.00 per hr.		Design Director 180.00 per hr.		Proj. Manager 120.00 per hr.		Sr. Architect 129.00 per hr.		Project Architect 112.00 per hr.		Apprentice Architect 81.00 per hr.		Building Code Manager 139.00 per hr.		CADD/BIM Technician 86.00 per hr.		Interior Designer 81.00 per hr.		Spec Writer 126.00 per hr.		Clerical 72.00 per hr.		Task Total
		Hours	Direct Cost	Hours	Direct Cost	Hours	Direct Cost	Hours	Direct Cost	Hours	Direct Cost	Hours	Direct Cost	Hours	Direct Cost	Hours	Direct Cost	Hours	Direct Cost	Hours	Direct Cost	Hours	Direct Cost	
2	**Existing conditions assessment/Programming**	20	4,060.00	0	0.00	76	9,120.00	0	0	0	0	24	1,944.00	0	0	76	6,536.00	0	0.00	0	0.00	0	0.00	21,660.00
3	**Concept development/Space Analysis**	60	12,180.00	20	3,600.00	186	22,320.00	0	0	0	0	100	8,100.00	16	2224	186	15,996.00	0	0.00	0	0.00	9	648.00	65,068.00
4	**Schematic Design (SD) 30%:**	70	14,210.00	20	3,600.00	262	31,440.00	8	1032	0	0	100	8,100.00	16	2224	262	22,532.00	0	0.00	32	4,032.00	9	648.00	87,818.00
5	**Design Development (DD) 60%:**	56	11,368.00	8	1,440.00	300	36,000.00	124	15996	120	13440	120	9,720.00	12	1668	300	25,800.00	0	0.00	48	6,048.00	9	648.00	122,128.00
6	**Construction Documents (CD) 100%:**	60	12,180.00	0	0.00	342	41,040.00	186	23994	270	30240	180	14,580.00	16	2224	342	29,412.00	0	0.00	56	7,056.00	9	648.00	161,374.00
7	**Procurement Phase**	40	8,120.00	0	0.00	108	12,960.00	0	0	0	0	0	0.00	0	0	114	9,804.00	0	0.00	4	504.00	6	432.00	31,820.00
8	**Interior Design (FFE)**	8	1,624.00	0	0.00	20	2,400.00	0	0	0	0	0	0.00	0	0	0	0.00	180	14,580.00	0	0.00	0	0.00	18,604.00
9	**Signage**	8	1,624.00	0	0.00	20	2,400.00	0	0	40	4480	80	6,480.00	0	0	0	0.00	0	0.00	4	504.00	0	0.00	15,488.00
	DWL DESIGN PHASE TOTAL	322	65,366.00	48	8,640.00	1314	157,680.00	318	41,022.00	430	48,160.00	604	48,924.00	60	8,340.00	1280	110,080.00	180	14,580.00	144	18,144.00	42	3,024.00	4742 **$523,960.00**

523,960.00

TEAM SUMMARY

Discipline	Pre-Design: Exist Conditions/ Programming	Pre-Design: Concept Development/ Space Analysis	Basic Services: SCHEMATIC DESIGN (SD)	Basic Services: DESIGN DEVELOPMENT (DD)	Basic Services: CONSTRUCTION DOCUMENTS (CD)	Basic Services: PROCUREMENT PHASE	Add'l Services: Interior Design	Add'l Services: Signage	Add'l Services: Legal Description/Exhibit	Totals
Basic Design & Engineering										
Architectural - DWL	21,660.00	65,068.00	87,818.00	122,128.00	161,374.00	31,820.00	18,604.00	15,488.00		523,960.00
Structural - MWG	-	3,750.00	16,490.00	17,010.00	17,130.00	1,625.00				56,005.00
MPE - LSW	2,240.00	11,240.00	16,860.00	38,780.00	79,220.00	4,960.00				153,300.00
				-						
Subtotal - Basic Design & Engineering	103,958.00			Subtotal - Basic Design & Engineering	595,215.00			Subtotal - Basic Design & Eng.	34,092.00	
									Basic Design & Engineering Sub-Total	**$733,265.00**
Other Design & Engineering										
Civil - Dibble	15,302.00	7,452.00	13,840.00	25,912.00	29,849.00	2,866.00			2,272.00	97,493.00
Landscape Design - LSD		3,528.00	3,684.00	5,106.00	12,126.00	951.00				25,395.00
Cost Estimating - RLB		7,750.00	12,400.00	18,600.00						38,750.00
Special Systems - LSW	1,680.00	2,640.00	3,800.00	9,980.00	19,480.00	2,760.00				40,340.00
	40,882.00	*101,428.00*	*154,892.00*	*237,516.00*	*319,179.00*	*44,982.00*	*18,604.00*	*15,488.00*	*2,272.00*	
Subtotal - Other Design & Engineering	38,352.00			Subtotal - Other Design & Engineering	161,354.00			Subtotal - Other Design & Engineering	2,272.00	
									Other Design & Engineering Sub-Total	**$201,978.00**
									Total	**$935,243.00**
									Design Allowance	$10,000.00
									Total with Allowance	**$945,243.00**

REIMBURSABLE EXPENSES

Firm	Expense	
DWL / Consultants	Printing, Copies, Courier - Billed only as needed	3,000.00
	Total Reimbursable	**$3,000.00**

DWL's personnel hourly rates are based on an Overhead Rate of 1.7335 and includes 10% profit.

Total w/ Reimbursable	**$948,243.00**

June 28, 2021
(Revised June 29, 2021)
(Revised July 1, 2021)
(Revised July 7, 2021)

Sandra Kukla, AIA, LEED, AP
DWL Architects + Planners, Inc.
2333 North Central Avenue
Phoenix, AZ 85004

MARTIN WHITE GRIFFIS
STRUCTURAL ENGINEERS, INC

Re: AZA – PMGA Terminal Annex Modernization
MWG #: 21051.00

Dear Sandra:

We are pleased to submit our proposal to provide structural engineering services for the Terminal Annex Modernization at Phoenix-Mesa Gateway Airport. Our understanding relative to the project scope and details of the services which we propose to provide, are as follow:

1. Scope:

a. Approximately 15,000 square foot building.

b. Similar design aesthetic to the terminal building complex.

c. Expansion to utilize similar structural systems as existing west building complex. A combination of masonry bearing walls, steel columns and steel framing to be utilized for the structural systems of the expansion.

d. Alternate structural systems will be studied that could be utilized, in order to increase the speed of construction. Similar aesthetics to the existing building must be maintained.

e. If no Soils Report is performed, MWG will note previous Soils Report were performed at the site but will not recommend any soils preparation and edit a soils specification. MWG will not accept any liability or take responsibility for any geotechnical requirements for this project.

f. Apron light pole foundation. Anticipate a drilled pier foundation.

g. Exterior site walls/fencing.

2. Design Services:

a. Concept Development:

1. Assist in determining the building materials to be used.

2. Provide a structural narrative.

3. Structural system options will be researched.

4. Selected concept will be developed to a 10% level.

5. Attend in-house quality review session with the design team prior to submission to the Airport.

b. Schematic Design:

1. Develop schematic level foundation and framing plans. Study the existing building plans and structural systems.

2. Provide a structural narrative and draft specifications.

3. Attend in-house quality review session with the design team prior to submission to the Airport.

4. Attend coordination meeting as required.

c. Design Development:

1. Further progress the structural systems design, sizing major structural components, establish lateral load resisting systems locating shear walls and/or frames.

2. Develop REVIT structural model.

3. Produce 60% structural specifications.

4. Progress foundation and framing plans and incorporate typical details.

5. Coordinate with A/E team and attend coordination meetings.

d. Contract Documents:

1. Provide final REVIT structural model and details for construction.

2. Provide final structural calculations and project specifications.

3. Provide progress submittals sealed and signed.

4. Attend coordination meetings.

5. Review cost estimate.

6. Attend in-house quality review session with the design team prior to submission to the Airport.

e. Procurement Phase:

1. Review requests for substitutions and prepared associated addenda.

2. Assist with the review of cost estimate.

3. Fees and Payments

a. The following are fee based on hourly rates , by phase (refer to attached worksheet):

Existing Conditions Assessment	$0.00
Concept Development	$ 3,750.00
Schematic Design	$16,490.00
Design Development	$17,010.00
Construction Documents	$17,130.00
Procurement Phase Services	$ 1,625.00
Total Fee Based on the attached spreadsheet:	$56,005.00

Hourly rates are based on our overhead rate of 133% and include a 10% profit.

b. No Construction Administration and site visits are included in this proposal.

c. Our services will be billed monthly and are due and payable within 7 days after receipt of payment by your client for work performed for which payment has been made. Non-payment could result in actions pursuant to ARS statute 32-128 C 5.

4. Additional Services:

a. The following services are not included in the Design Phase Services. Martin, White & Griffis shall be additionally compensated for work hereunder when such services are authorized by the Architect on an hourly basis as outlined below.

1. The final Structural Special Inspections which are required by the Building Code.
2. Any changes to plans and specifications concerning any portion of the structural systems after approval of the owner have been obtained.
3. Work resulting from corrections, revisions or substitutions required because of errors or omissions in construction by the building contractor.
4. Preparation of construction cost estimates.

5. Formal value engineering studies.
6. Site visits.
7. Structural design, detailing and/or drafting services in connection with any other improvements to the structure other than as outlined in this proposal.
8. Any analysis, details and/or calculations for seismic restraint or special anchorage of equipment.
9. MWG will not be responsible for any aspect of the geotechnical work without a soils report for the site. No soils specification or information on the contract drawings will be provided.

b. Fee for additional services will be on an hourly basis at the billing rates as follows:

Senior Structural Engineer:	$180.00 / hr.
Structural Engineer:	$145.00 / hr.
Engineer EIT/Designer	$115.00 / hr.
Revit:	$100.00 / hr.

Hourly rates are based on our overhead rate of 133% and include a 10% profit.

c. Payment of the fee for additional services will be due and payable on the same basis as that for design phase services, outlined in paragraph 3 above.

d. No additional service shall be provided without prior written authorization to proceed from the Architect.

5. **Delays:** Should the project be terminated or have an extended delay at any time, the payment of fee shall be a proportional fee for services performed to termination date or date of delay.

If, for any reason, the project design is completed but no contract awarded the fee basis shall be the full lump sum fee indicated.

6. **Termination of Agreement:** This agreement is terminated if and when the agreement between the Owner and Architect is terminated. The engineer shall be promptly notified of the termination. It also may be terminated by either party upon seven day's written notice should the other party fail substantially to perform in accordance with its terms through no fault of others than the engineer, the engineer shall be paid for services performed to termination date, including reimbursements then due.

Thank you for the opportunity of submitting this proposal. If you find it satisfactory, please indicate so by signing and returning one copy, so that we will be able to proceed with the work.

Sincerely,

Thomas C. Griffis, PE
Principal

Agreed to:

_____
DWL Architects + Planners, Inc.

_____
Date

TCG:mjo

Attachment

AZA/PMGA - Terminal Annex Modernization

Consultant: Martin, White & Griffis Structural Engineers Inc. **Date: 7/1/2021**

PHASE	HOURS	RATES	FEE	SUBTOTAL
Concept				
Sr Structural Engineer	8	$180.00	$1,440.00	
Structural Engineer	8	$145.00	$1,160.00	
EIT	10	$115.00	$1,150.00	
Revit	0	$100.00	$0.00	
				$3,750.00
SCHEMATIC				
Sr Structural Engineer	24	$180.00	$4,320.00	
Structural Engineer	26	$145.00	$3,770.00	
EIT	40	$115.00	$4,600.00	
Revit	38	$100.00	$3,800.00	
				$16,490.00
DESIGN DEVELOPMENT				
Sr Structural Engineer	24	$180.00	$4,320.00	
Structural Engineer	28	$145.00	$4,060.00	
EIT	42	$115.00	$4,830.00	
Revit	38	$100.00	$3,800.00	
				$17,010.00
CONSTRUCTION DOCUMENTS				
Sr Structural Engineer	16	$180.00	$2,880.00	
Structural Engineer	40	$145.00	$5,800.00	
EIT	66	$115.00	$7,590.00	
Revit	86	$10.00	$860.00	
				$17,130.00
PROCUREMENT PHASE				
Sr Structural Engineer	0	$180.00	$0.00	
Structural Engineer	5	$145.00	$725.00	
EIT	0	$115.00	$0.00	
Revit	9	$100.00	$900.00	
				$1,625.00
			Total	**$56,005.00**

Hourly rates based on Overhead rate of 133% and 10% profit.

July 8, 2021

DWL Architects + Planners
2333 North Central Avenue
Phoenix, Arizona 85004

Attn: Sandy Kukla, AIA, LEED AP

Re: AZA/IWA (Phoenix Mesa Gateway Airport) Terminal Annex
LSW Proposal No. PR2021-173 Revision 3

Ms. Kukla:

We are pleased to offer our engineering services for the new Terminal Annex building at Phoenix Mesa Gateway Airport (AZA).

PROJECT UNDERSTANDING

This project is understood to be a replacement 15,000 square foot single story terminal annex building. The existing annex is to be demolished. The new annex is anticipated to include 4-5 hold rooms, retail concessions, restrooms, mothers' room, and utility rooms. The retail concession space will be vanilla shell and is to include water, sewer, power rough-ins, and communication cabling (two Category 6 cables). Exterior courtyard and pet relief areas are included. The new annex building will be connected to the phase 1 terminal building via an enclosed corridor. The construction budget is understood to be $10 million. The project delivery system is understood to be Construction Manager at Risk (CMAR).

Our mechanical, plumbing, electrical and technology engineering services for this project will consist of the following. Services not indicated below are considered outside of our basic scope and will be provided upon request as an additional service.

It is our understanding that the design of this project will include deliverables as defined below. The design is understood to be provided as a single package though construction may be phased. Considerations for potential phasing will be included in the design. The design duration for this project is understood to be 41 weeks.

HVAC Life Cycle Cost Analysis

1. Provide a written report outlining the results of the HVAC Life Cycle Cost Analysis (LCCA) and provide recommendations.

Concept Design (10%)

1. Provide basic concept level design exhibits showing the engineering systems intended for this project.

2333 W Northern Ave, #9 . Phoenix, Arizona 85021-9334 . Telephone 602.249.1320 . Facsimile 602.336.3276

2. Provide a written narrative describing the engineering systems intended for this project.

Schematic Design (30%)

1. Provide basic schematic level design drawing showing the engineering systems intended for this project.

2. Assist the architectural design team with the engineering systems space requirements in the development of the schematic building floor plan.

3. Engineering specification table of contents.

Design Development (60%)

1. Prepare design development drawings showing all main engineering systems equipment locations and sizes. Equipment weights will be shown as needed for the Structural Engineer. The drawings will also include the following:

    a. Routing of mechanical duct mains.

    b. Mechanical zoning layout and thermostat locations for review.

    c. Routing of main plumbing utilities and invert elevations as needed for the Civil Engineer.

    d. Routing of cable tray.

    e. Routing of site electrical and technology duct banks.

2. Provide engineering systems equipment cut sheets for review.

3. Assist the architectural design team in the development of the ceiling plan.

4. Draft engineering specifications.

Construction Documents (100%)

1. Completion of the engineering design drawings.

2. Completion of the engineering specifications.

Conformed Set

1. Addendum drawings prior to GMP.

Procurement Phase

1. Addendum drawings in response to RFIs and Substitution requests.

SCOPE OF WORK

Mechanical

The mechanical scope for this project is anticipated to include:

1. Complete life cycle cost analysis (LCCA) comparing packaged DX unitary equipment and water source heat pumps units.

2. Complete heating, cooling, and ventilation load calculations.

3. Based on the results of the LCCA, the mechanical design will include one of the following for HVAC in the new annex building:

    a. Design of packaged DX heating and cooling unitary equipment, and all associated ductwork, air distribution, condensate piping, and controls.

    b. Design of water source heat pump units, and all associated ductwork, air distribution, condenser water branch piping, condensate piping, and controls. This includes expansion of the cooling tower yard as required.

4. Design of dedicated split system DX cooling in MDF/IDF rooms, including piping and controls.

5. Design of restroom exhaust systems, and all associated ductwork, exhaust inlets, and controls.

Plumbing

The plumbing scope for this project is anticipated to include:

1. Selection of plumbing fixtures as located on the Architectural plans and the sizing and routing of the associated domestic cold/hot water and the waste and vent piping for these fixtures to 5'-0" beyond the building perimeter. The domestic water service is understood to be provided from a municipal service of adequate capacity and pressure for this project. Therefore, a booster pump system is not anticipated as part of the scope of this project.

2. Sizing and selection of the domestic water heater system.

3. Sizing and routing of the roof primary drains, overflow drains and associated drain piping to 5'-0" beyond the building perimeter. The roof plan and locations of the roof primary/overflow drains are provided by your office.

Electrical

The electrical scope for this project is anticipated to include:

1. Design of the electrical power distribution for this project, including connection to the equipment, receptacles, lighting, and Owner equipment. Our design includes coordination with the local power utility company, sizing and location of the main service entrance section and distribution switchgear. Power will be provided for ground service equipment (GPU and PCAir).

2. General Lighting: Our design includes selection of lighting fixtures, locating the lighting fixtures and the associated switching/control of the lighting systems.

3. Lighting system illumination and energy compliance calculations for lighting fixtures selected by LSW are included.

4. Site Lighting: Our design includes the overall site lighting, including exterior building-mounted lighting, walkway lighting, and apron lighting (airfield lighting is no included). Offsite lighting, street lighting, and traffic control lighting systems are not included in the base scope of services.

5. Emergency Power Systems: Our design includes connection to the existing generator and distribution system. It is assumed that the existing generator and distribution system is adequate for this project and design to modify and/or replace this system is not assumed as part of the scope of this project.

Technology Systems

The technology scope for this project is anticipated to include:

1. Site Design: Our design includes intended conduit and/or duct bank routing, manhole/vault layout, and building entrance locations. The site design will be an extension of the existing ductbank system.

2. Passive Network Cabling: Our design service includes cabling system design from outlet locations to the Main Equipment Room (MER) or Telecommunications Room (TR), cable support and pathway system. Includes outside plant fiber-optic and multiple pair copper cabling from the new terminal annex to the existing ticketing building as directed by the owner.

3. Information Display System: Our design service includes indicating the locations of the IDS monitors and associated cabling requirements. All cabling to be routed to the termination point in the MER/TR Rooms. Design will be coordinated with the owner. Owner will provide product specifications for monitors, product will be indicated in the design unless directed otherwise by owner.

4. Intercommunication System: Our design service includes the extension of the building paging and/or mass communication system, including specifications for the electronic equipment, including distribution amplifiers, input/output modules, phone interface modules, microphones, and speakers. It is our understanding that the Airport has upgraded the paging system, our design will be an extension of this system.

5. Access Control/Security System: Our design service includes extending the existing access control, card reader, door monitoring, door control, motion sensor, and duress systems, and associated control panels. The door hardware will be specified by the Architect.

6. Camera Surveillance: Our design includes extending the existing surveillance system to the new terminal. The camera layout and associated cabling and pathways, camera specification, and video recording requirements will be included in the design. The new cameras will be of the same manufacturer as the existing cameras in the other terminal sections.

Fire Sprinkler

The fire sprinkler scope for this project is anticipated to include:

1. Performance based specification addressing the fire sprinkler system design for bidding purposes. The installation drawings (including detailed piping drawings and calculations) will be a deferred submittal by the Fire Sprinkler Contractor.

Fire Alarm

The fire alarm scope for this project is anticipated to include:

1. Performance based fire alarm system design for bidding purposes, including device placement, a typical riser diagram, and specifications. The installation drawings (including detailed wiring diagrams, load calculations, voltage drop calculations, etc.) will be a deferred submittal by the Fire Alarm Contractor. The fire alarm system will be an extension of the existing fire alarm system presently in the terminal building.

GENERAL

Our scope will include the following general engineering services for the project:

1. Site investigation of the existing annex building to observe the systems associated with this project (site investigation is limited to accessible areas only). Site investigation to include verification of telecommunication duct bank system and electrical underground systems.

2. Attend up to four in-person stakeholder meetings during the design phase of this project. Attend regular design team meetings (assumed bi-weekly via Teams).

3. Technology Meetings: Attend up to three meetings with Owner and architect for coordination of systems.

4. Coordination with the CMAR during the design phase.

5. Coordination with the cost estimator during the design phase.

6. Design using Revit with models stored on a BIM360 Project HUB. It is required that while our model is in BIM360, the model shall remain independent from all disciplines outside of our scope of work, and any revisions to the model shall be made by our staff only. It is anticipated that the architectural BIM360 model elements will be "frozen" 14 days before each milestone deliverable.

7. Provide one set of drawings in electronic portable document format (PDF) at each intermediate deliverable.

8. Provide one final set of signed and sealed drawings in electronic portable document format (PDF) at the completion of design.

9. Provide one final set of signed and sealed specifications in electronic portable document format (PDF) at the completion of design.

10. Our procurement phase services include review of the Contractor RFIs (up to 10) and substitution requests (up to 6), and updating drawings as required (up to 1 set).

11. Value engineering services will be included if the cost estimate is 10% greater than the budget at the DD phase.

PROFESSIONAL FEE

Our fee for the work outlined above will be billed at our standard hourly rates (defined below) up to a not-to-exceed maximum of **$193,640.** The breakdown of the fee into phases or tasks is for your convenience.

	MEP	Tech
Existing Conditions Assessment	$ 2,240.	$ 1,680.
Concept Development	11,240.	2,640.
Schematic Design	16,860.	3,800.
Design Development	38,780.	9,980.
Construction Documents	79,220.	19,480.
Procurement Phase Services	4,960.	2,760.
	---	---
Total	$153,300.	$40,340.

NOTE: This fee includes all travel expenses incurred within the metropolitan Phoenix area. Travel outside the metropolitan Phoenix area will be billed as a reimbursable expense, including, but not limited to, travel, rentals, meals, lodging, and reasonable incidental expenses.

This fee does not include plotting or printing of sets of our drawings or other discipline's drawings for interprofessional coordination or distribution.

Our fee was generated based on our current rate structure which include an overhead rate of 174% and a fee of 10%.

CLIENT SERVICES

Services requested of the Client and/or Owner include the following:

1. Provide the following as required to assist us in the site investigation of existing conditions: facility access and an escort, ladders or other means to access overhead systems and equipment, and authorization for the use of cameras.

2. Provide copies of the existing construction documents.

3. Provide access to the building maintenance and technology staff to answer questions.

4. Provide all connection requirements for Owner-provided equipment.

5. Provide a project title block and updated Revit model in a timely manner to meet the established project deliverables.

6. Provide the following building and Owner information:

    a. Building Occupancy Classification.

    b. Building Construction Type.

    c. Building Hazard Classification.

    d. Building Seismic and Risk Category.

    e. Owner's Fire Suppression Insurance Requirements.

7. Provide a PDF set of the drawings at each established deliverable.

8. Provide a water flow and pressure test to document the water main capabilities.

9. Provide electrical demand load readings for existing facilities.

EXCLUSIONS

1. Cost estimating.
2. Meetings or teleconference meetings beyond those listed.
3. Electrical demand load readings.
4. Construction administration services.
5. All work associated with LEED certification of the project.
6. Building Information Modeling (BIM) beyond an LOD-200 or clash-free modeling.
7. Building energy consumption calculations or modeling.
8. Documenting energy code compliance of the building envelope or other systems not in our scope of services described above.
9. Utility company energy rebate data collection and/or submission.
10. Any design services caused by scope changes.

ADDITIONAL SERVICES

Additional services will be performed on an hourly basis at our standard billing rates or a separate fixed fee contract as determined by your firm. Our current rate structure is shown for your reference. Hourly contracted work will be invoiced based on our published LSW rate structure matching the time frame when the work is being completed.

2021:	Principal	$200./ hour
	Senior Engineer	$175./ hour
	Engineer	$140./ hour
	Senior Designer	$125./ hour
	Field Observer	$120./ hour
	Designer	$105./ hour
	CAD Operator	$80./ hour
	Administrative	$75./ hour
	Outside Services	Our cost

This proposal is effective for not more than 90 days.

LSW accepts the AIA C401 contract and requests that you prepare this document reflecting the terms and conditions of this proposal for our mutual execution prior to our beginning work.

We appreciate this opportunity and look forward to working with your firm on this project.

Regards,

LSW ENGINEERS ARIZONA, INC.

Cory Killpack, P.E.
Vice President

CK:ab:gk:js

Please indicate your acceptance of this proposal by signing and returning one copy of this letter for our files.

APPROVED: _____ DATE: _____

YOUR PROJECT / REFERENCE NO.:_____

https://lswphxcom.sharepoint.com/sites/Marketing/Shared Documents/PROPOSAL/2021/PR2021-173 - Phoenix Mesa Gateway Arizona Terminal Annex/PR2021-173 fee AZA Terminal Annex.docx

Proposal No.: PR2021-173
Project Name: AZA Terminal Annex

Design Phase Services — % of Total Fee: 81.2%

Typical Meeting Hours -- See individual tasks for quantity of meetings.

Staff Type	Rate	Mech Hrs	Mech Cost	Elec Hrs	Elec Cost	Tech Hrs	Tech Cost	Sub-totals
Engineer	140.00	1.00	140.00	1.00	140.00	1.00	140.00	420.00
Sub-totals		**1.00**	**140.00**	**1.00**	**140.00**	**1.00**	**140.00**	**420.00**

Stakeholder Meetings ***Task ID: 1*** Qty: 4 % of Total Fee: 2.8%

Staff Type	Rate	Mech Hrs	Mech Cost	Elec Hrs	Elec Cost	Tech Hrs	Tech Cost	Sub-totals
Engineer	140.00	4.0	560.00	4.0	560.00	4.0	560.00	1,680.00
Sub-totals		4.0	560.00	4.0	560.00	4.0	560.00	1,680.00
Task Totals		**16.0**	**2,240.00**	**16.0**	**2,240.00**	**16.0**	**2,240.00**	**6,720.00**

Site Investigation ***Task ID: 10*** % of Total Fee: 1.6%

Staff Type	Rate	Mech Hrs	Mech Cost	Elec Hrs	Elec Cost	Tech Hrs	Tech Cost	Sub-totals
Engineer	140.00	8.0	1,120.00	8.0	1,120.00	12.0	1,680.00	3,920.00
Task Totals		**8.0**	**1,120.00**	**8.0**	**1,120.00**	**12.0**	**1,680.00**	**3,920.00**

Concept Development ***Task ID: 15*** % of Total Fee: 3.7%

Staff Type	Rate	Mech Hrs	Mech Cost	Elec Hrs	Elec Cost	Tech Hrs	Tech Cost	Sub-totals
Senior Engineer	175.00	4.0	700.00	4.0	700.00	4.0	700.00	2,100.00
Engineer	140.00	8.0	1,120.00	8.0	1,120.00	8.0	1,120.00	3,360.00
Senior Designer	125.00	4.0	500.00	4.0	500.00	4.0	500.00	1,500.00
Designer	105.00	4.0	420.00	4.0	420.00	-	-	840.00
CAD Operator	80.00	4.0	320.00	4.0	320.00	4.0	320.00	960.00
Clerical	75.00	-	-	-	-	-	-	-
Task Totals		**24.0**	**3,060.00**	**24.0**	**3,060.00**	**20.0**	**2,640.00**	**8,760.00**

Schematic Design ***Task ID: 20*** % of Total Fee: 8.7%

Staff Type	Rate	Mech Hrs	Mech Cost	Elec Hrs	Elec Cost	Tech Hrs	Tech Cost	Sub-totals
Senior Engineer	175.00	14.0	2,450.00	14.0	2,450.00	8.0	1,400.00	6,300.00
Engineer	140.00	24.0	3,360.00	24.0	3,360.00	8.0	1,120.00	7,840.00
Senior Designer	125.00	8.0	1,000.00	8.0	1,000.00	4.0	500.00	2,500.00
Designer	105.00	8.0	840.00	8.0	840.00	-	-	1,680.00
CAD Operator	80.00	8.0	640.00	8.0	640.00	8.0	640.00	1,920.00
+ Meetings Qty:	1.00	1.0	140.00	1.0	140.00	1.0	140.00	420.00
Task Totals		**63.0**	**8,430.00**	**63.0**	**8,430.00**	**29.0**	**3,800.00**	**20,660.00**

Design Development ***Task ID: 22*** % of Total Fee: 17.6%

Staff Type	Rate	Mech Hrs	Mech Cost	Elec Hrs	Elec Cost	Tech Hrs	Tech Cost	Sub-totals
Senior Engineer	175.00	22.0	3,850.00	22.0	3,850.00	8.0	1,400.00	9,100.00
Engineer	140.00	32.0	4,480.00	32.0	4,480.00	16.0	2,240.00	11,200.00
Senior Designer	125.00	24.0	3,000.00	24.0	3,000.00	8.0	1,000.00	7,000.00
Designer	105.00	24.0	2,520.00	24.0	2,520.00	16.0	1,680.00	6,720.00
CAD Operator	80.00	32.0	2,560.00	32.0	2,560.00	16.0	1,280.00	6,400.00
Clerical	75.00	8.0	600.00	8.0	600.00	-	-	1,200.00
+ Meetings Qty:	1.00	1.0	140.00	1.0	140.00	1.0	140.00	420.00
Task Totals		**143.0**	**17,150.00**	**143.0**	**17,150.00**	**65.0**	**7,740.00**	**42,040.00**

Construction Documents ***Task ID: 30*** % of Total Fee: 41.4%

Staff Type	Rate	Mech Hrs	Mech Cost	Elec Hrs	Elec Cost	Tech Hrs	Tech Cost	Sub-totals
Senior Engineer	175.00	22.0	3,850.00	22.0	3,850.00	8.0	1,400.00	9,100.00
Engineer	140.00	56.0	7,840.00	56.0	7,840.00	24.0	3,360.00	19,040.00
Senior Designer	125.00	80.0	10,000.00	80.0	10,000.00	40.0	5,000.00	25,000.00
Designer	105.00	96.0	10,080.00	96.0	10,080.00	48.0	5,040.00	25,200.00
CAD Operator	80.00	72.0	5,760.00	72.0	5,760.00	40.0	3,200.00	14,720.00
Clerical	75.00	24.0	1,800.00	24.0	1,800.00	16.0	1,200.00	4,800.00
+ Meetings Qty:	2.00	2.0	280.00	2.0	280.00	2.0	280.00	840.00
Task Totals		**352.0**	**39,610.00**	**352.0**	**39,610.00**	**178.0**	**19,480.00**	**98,700.00**

Procurement Phase ***Task ID: 50*** % of Total Fee: 3.2%

Staff Type	Rate	Mech Hrs	Mech Cost	Elec Hrs	Elec Cost	Tech Hrs	Tech Cost	Sub-totals
Engineer	140.00	6.0	840.00	6.0	840.00	8.0	1,120.00	2,800.00
Senior Designer	125.00	8.0	1,000.00	8.0	1,000.00	8.0	1,000.00	3,000.00
CAD Operator	80.00	8.0	640.00	8.0	640.00	8.0	640.00	1,920.00
Task Totals		**22.0**	**2,480.00**	**22.0**	**2,480.00**	**24.0**	**2,760.00**	**7,720.00**

LCCA ***Task ID: 16*** % of Total Fee: 2.1%

Staff Type	Rate	Mech Hrs	Mech Cost	Elec Hrs	Elec Cost	Tech Hrs	Tech Cost	Sub-totals
Engineer	140.00	8.0	1,120.00		-		-	1,120.00
Senior Designer	125.00	32.0	4,000.00		-		-	4,000.00
Task Totals		**40.0**	**5,120.00**	**-**	**-**	**-**	**-**	**5,120.00**

Design Phase Services Totals	**668.0**	**79,210.00**	**628.0**	**74,090.00**	**344.0**	**40,340.00**	**193,640.00**

p 602.957.1155 | 7878 North 16th Street, Suite 300
f 602.957.2838 | Phoenix, AZ 85020
dibblecorp.com

July 7, 2021

Sandra Kukla, AIA, LEED AP

DWL Architects + Planners, Inc.

2333 North Central Avenue

Phoenix, Arizona 85004

RE: PMGAA Terminal Annex Modernization
Survey & Civil Engineering Services Proposal

Sandra,

Thank you for the opportunity to submit this proposal to provide survey and civil engineering services. This proposal has been prepared based on our understanding of the project as described in the Project Understanding and Scope of Work sections. We look forward to partnering with your team for a successful project.

PROJECT UNDERSTANDING:

Project summary

- This project includes an approximate 15,000 terminal building expansion to provide 4 to 5 gate hold-room spaces
- The project will require modifications to the apron adjacent to the building with a slope of 1% for 50' from the building to a new apron trench drain
- The existing site is fully developed and will require the removal/relocation of the current terminal annex prior to construction
- This project will tie into the existing Phase I terminal project
- This project will include modifications to the apron/taxiway striping to accommodate the revised gate/plane parking locations and to accommodate Group III plus B757W aircraft on Taxiway W.
- This project will include modification, extension and/or relocation of existing utilities as needed to accommodate the new building

Grading & Drainage

- This project will have minimal increase in the amount impervious surfaces within the project area and thus additional storm water retention will not be provided
- This project will require grading away from the building to an extension of the existing trench drain system to south of the terminal expansion, the extension or rerouting (as required) of the existing storm drain system and relocation of the oil/water separator and/or the installation of a new oil/water separator
- Off-site flows are not expected to adversely impact this project

Pavement and Pavement Markings

- Existing pavement will be removed within the building footprint, for the 50' to the east to accommodate the required 1% NFPA/FAA grading slope away from the building adjacent to an aircraft apron, and around the perimeter of the building as required to accommodate building foundation construction and transition to existing grades; and replaced with new pavement as required
- Based on layouts provided by DWL, new pavement marking plans and details will be prepared to accommodate any changes to existing aircraft parking positions (such as potential nose-gear markings to accommodate the shift of Taxiway W noted below), and the possible addition of an 11th parking position to the south, including removal of on-apron private vehicle markings in conflict with the 11th position
- Pavement marking plans and details will be prepared to widen the Taxiway Object Free Area (TOFA) of Taxiway W as required to allow full-length access on the Taxiway by B-757 (winglet) aircraft, including relocation of the TSA Boundary/Parking Limit Line and the Vehicle Service Road (VSR) markings

Existing/proposed utilities:

- Fire service will be provided to the new building via the relocated/new water line adjacent to the building, including a new waterline loop around the east side of the building for fire protection, and addition/relocation of fire hydrants as required
- Domestic water service will be provided to the new building via a relocated/new water line adjacent to the building
- Sanitary sewer service will be provided with connection to the public main via the existing service line and/or a new service line connection to the existing sewer mains to the west
- Utility relocations are expected to include water, storm drain and possibly sewer that are currently located under the proposed footprint of the terminal expansion. In addition, there are electric and communications lines that are currently located under the proposed footprint of the terminal expansion. The design for the relocation of these lines will be done by others but shown on the civil plans for coordination
- Off-site utility improvements are not expected

Adjacent roadway infrastructure:

- This project is not located adjacent to any roadways and thus roadway improvements are not anticipated for this project
- There will be a need to maintain access to Hanger 24, the outbound luggage area, and possibly the existing mechanical yard

Parcel summary

- This project is on the current terminal site and therefore it is not anticipated that a re-plat or lot combination will be required
- It is anticipated that there will be a need to abandon portions of the existing water easement and prepare a new easement for the realigned water line

CONDITIONS:

- Architect will provide electronic files (AutoCAD) of the proposed site and building improvements for use as the basis of the civil design
- The Client will provide a Geotechnical Report with recommendations for pavement sections and other information as needed to complete the civil design for this project
- Submittals will be made via pdf documents and printing if required will be done by others or reimbursed at cost to Dibble
- Submittal and review fees will be paid by Owner/Architect at the time of submittal
- Site plan changes after SD phase may require additional services request, site plan changes after DD phase will require additional services request
- Meetings and construction phase site observations are as noted in each section. Should the required meeting attendance exceed the expected number of meetings additional compensation will be requested.

DESIGN STANDARDS/PERMITTING AGENCY

Design will conform to the following Authorities Having Jurisdiction (AHJ).

- PMGAA
- City of Mesa
- FAA

Design will be reviewed and permitted by the following AHJ(s)

- PMGAA
- City of Mesa

SCHEDULE:

- Dibble is prepared to begin immediately and will coordinate with the Owner/Architect to establish a project schedule

SCOPE OF SERVICES:

1.0 Survey Services

1.1 Topographic Survey

Dibble will perform Topographic Survey services including:

- Dibble will confirm the project control for the site
- Basis of Elevation: Elevations shall be tied to the City of Mesa datum
- Basis of Coordinates: Coordinates (Northing and Easting) shall be based upon the City of Mesa datum
- Prepare design ready AutoCAD base file including existing utilities and existing site features based on available utility as-builts as well as conventional topographic survey
- Limits of survey are per the attached exhibit.

2.0 Existing Conditions Assessment

2.1 Site Assessment

Dibble will perform Site Assessment services including:

- Dibble will attend the project kick-off meeting
- Dibble will review record drawings from previous projects to understand the impacts of this project to the existing utilities, site grading and required access points
- Dibble will attend a site walk to field verify information from record drawings
- Dibble will prepare a civil narrative of the existing site conditions and the project impacts

3.0 Concept Development

3.1 Site Concept Plan (10% plans)

Dibble will perform Site Concept Development services including:

- Coordinate with DWL to develop a conceptual site plan
- Develop a conceptual utility plan based on the conceptual site plan
- Develop a conceptual grading plan based on the conceptual site plan
- Submit concept plans and an updated civil narrative

4.0 Schematic Design Phase

4.1 Schematic Design Documents

Dibble will prepare Schematic Design documents including:

- Develop on-site plans including site demolition plan, civil site plan, grading & drainage plan, and utility plan
- Develop design of horizontal control of the site elements of the project including walls, hardscape, drives, and drainage features
- Develop design of water, sewer, and fire protection services
- Develop design of storm water conveyance and storm drain system
- Develop draft drainage statement for the site for inclusion on the civil cover sheet
- Coordinate dry utilities by acquiring design plans from design team and illustrating dry utility alignment on civil plans, for reference only
- Coordinate with the Architect for modifications to (and additions to if required), the apron aircraft parking position pavement markings and VSR/TSA marking relocations
- Coordination with Owner, Contractor, Architect, Plumbing Engineer & Landscape Architect

4.2 Meetings & Coordination

- 8 ea. - 1 hour design team meetings
- 1 ea. - 2 hour meeting with PMGAA

5.0 Design Development Phase

5.1 Design Development Documents

Dibble will prepare Design Development documents including:

- Refine on-site plans including site demolition plan, civil site plan, grading & drainage plan, utility plan, cross sections, and details
- Refine design of horizontal control and vertical design & control of the site elements of the project including walls, hardscape, drives, and drainage features
- Refine design of water, sewer, and fire protection services
- Refine design of storm water conveyance and storm drain system
- Refine draft drainage statement for the site for inclusion on the civil cover sheet

- Coordinate dry utilities by acquiring design plans from design team and illustrating dry utility alignment on civil plans, for reference only
- Prepare preliminary obliteration and pavement marking plans and details to revise the Taxiway Object Free Area/TSA boundary markings, and the Vehicles Service Road (VSR) markings paralleling Taxiway W to accommodate a full Group III plus B757 (with winglets) aircraft on Taxiway W
- Provide input to DWL with respect to phasing of apron area work elements vs. existing operations
- Coordination with Owner, Contractor, Architect, Plumbing Engineer & Landscape Architect

5.2 Meetings & Coordination

- 9 ea. - 1 hour design team meetings
- 1 ea. - 2 hour meeting with PMGAA

6.0 Construction Document Phase

6.1 Construction Documents

Dibble will prepare Construction Documents including:

- Finalize on-site plans including site demolition plan, civil site plan, grading & drainage plan, utility plan, cross sections, and details
- Finalize design of horizontal control and vertical design & control of the site elements of the project including walls, hardscape, drives, and drainage features
- Finalize the design of water, sewer, and fire protection services
- Finalize design of storm water conveyance and storm drain system
- Prepare final drainage statement for the site for inclusion on the civil cover sheet
- Coordinate dry utilities by acquiring design plans from design team and illustrating dry utility alignment on civil plans, for reference only
- Prepare final obliteration and pavement marking plans and details to revise the Taxiway Object Free Area/TSA boundary markings, and the Vehicles Service Road (VSR) markings paralleling Taxiway W to accommodate a full Group III plus B757 (with winglets) aircraft on Taxiway W
- Coordination with Owner, Contractor, Architect, Plumbing Engineer & Landscape Architect

6.2 Meetings & Coordination

- 10 ea. - 1 hour design team meetings
- 1 ea. - 2 hour meeting with PMGAA

7.0 Procurement Phase

7.1 Procurement Services

Dibble will perform Procurement services including:

- Respond to bidding Contractor/Sub-Contractor civil related questions

7.2 Meetings & Coordination

- 1 ea. - 1 hour design team meeting

ALLOWANCE

8.0 Legal Description & Exhibit

Dibble will prepare Legal Descriptions & Exhibits including:

- Abandonment of a portion of the existing water line easement
- New water line easement for the relocated/extended portion of the water line

EXCLUSIONS:

Unless noted otherwise within the Scope of Services the following services are excluded from this proposal

- Cost of permits or fees
- Survey Services including: Replat/Lot Combinations, ALTA survey, legal descriptions & exhibits
- Traffic study/Traffic impact analysis/Signal design
- Roadway signing & striping design
- Sub-surface exploration (utility pot-holing)
- Environmental investigations
- Geotechnical investigation
- Pavement section design & percolation tests (To be provided by Geotechnical Engineer)
- Over excavation plan for building foundations

- Design of off-site/public street, sidewalk, water, or sewer improvements
- Off-site flow analysis, floodplain analysis/modification/permitting, 404 permitting, off-site hydrology/hydraulics study
- Quantities and Cost Estimating (since RLB will be doing this?)
- Electrical design, mechanical design, natural gas design, landscaping, and irrigation design
- Site structural design including walls can be provide for an additional fee
- Street light plan/street light design
- Construction services
- Construction staking/Construction inspection
- As-built survey
- Certification of finish floor elevation
- Storm Water Management Plan and NOI (Notice of Intent) application will be prepared by the Contractor

FEES:

1.0	Survey Services		
	1.1	Topographic Survey	$10,321
2.0	Existing Conditions Assessment		
	2.1	Site Conditions Assessment	$ 4,981
3.0	Concept Development		
	3.1	Site Concept Plan (10% Plans)	$ 7,452
4.0	Schematic Design		
	4.1	Schematic Design Documents	$12,300
	4.2	Meetings & Coordination	$ 1,540
5.0	Design Development		
	5.1	Design Development Documents	$24,174
	5.2	Meetings & Coordination	$ 1,738
6.0	Construction Documents		
	6.1	Construction Documents	$27,942
	6.2	Meetings & Coordination	$ 1,907
7.0	Procurement Phase		
	7.1	Procurement Services	$ 2,294
	7.2	Meetings/Site Visits	$ 572
		Subtotal	**$95,221**
ALLOWANCE			
8.0	Legal Description & Exhibit		$ 2,272
		Subtotal	**$ 2,272**
		Project Total	**$97,493**

STANDARD BILLING RATES:
See attached billing rate schedule for current Dibble billing rates. When calculating the Dibble billing rates an overhead rate of 1.8867 and a profit of 10% is used.

ADDITIONAL SERVICES:
If the Consultant/Engineer is required to perform services in addition to those outlined in the Scope of Work, by reason of substantial changes ordered by the Owner or Architect or for any reason beyond the Consultant's/Engineer's control, they are to receive compensation for such services. Compensation for additional services not included in the Scope of Work for the basic services shall be based on time expended. Additional services must be approved by the Owner prior to the start of such work.

Invoices will be submitted monthly based on the percentage of the survey and civil engineering services that are complete. These invoices will be due and payable upon receipt and will be considered past due if not paid within seven days after Client's receipt of payment from the Owner.

If you have any questions, please feel free to call us at (602) 957-1155.

Sincerely,

Kent E. Norcross, PE

Vice President, Land Development

Dibble

If this proposal including the attached back-up documents is acceptable, please so indicate by signing and dating below. The return of this signed document shall serve as our notice to proceed with this project.

_____

Name (Print), Title

_____ _____

Signature Date

DWL Architects & Planners

Site Exhibit/Limits of Survey

PMGAA Terminal Annex Modernization
Fee Proposal
DIBBLE

			2021 Standard Billing Rates		SR. PROJECT MGR	PROJECT MGR	SENIOR ENG (PE)	QA/QC MGR	PROJECT ENG(PE)	ASSIST ENG(EIT)	DESIGNER	LAND SURV(RLS)	SURVEY TECH	SURVEY CREW	ADMIN ASSIST
			FEE	HOURS	$205.00	$198.00	$189.00	$192.00	$169.00	$137.00	$123.00	$183.00	$101.00	$195.00	$84.00
1.0	**Survey Services**	***Internal***													
1.1	Topographic Survey	*1600 SV*	**$10,321**	**65**								16	23	26	
2.0	**Existing Conditions Assessment**	***Internal***													
2.1	Site Assessment	*1600 SV*	**$4,981**	**29**	2	6	2	2	10	5	2				
3.0	**Concept Development**	***Internal***													
3.1	Site Concept	*1600 SV*	**$7,452**	**48**	2	6	2	2	12	8	16				
4.0	**Schematic Design Phase**														
4.1	Schematic Design Documents	*1400 LD*	**$12,300**	**78**	2	16	4	6	12	8	30				
4.2	Meetings & Coordination	*1400 LD*	**$1,540**	**8**	2	4			2						
5.0	**Design Development Phase**														
5.1	Design Development Documents	*1400 LD*	**$24,174**	**156**	2	20	8	10	36	32	48				
5.2	Meetings & Coordination	*1400 LD*	**$1,738**	**9**	2	5			2						
6.0	**Construction Document Phase**														
6.1	Construction Documents	*1400 LD*	**$27,942**	**180**	2	24	8	14	40	36	56				
6.2	Meetings & Coordination	*1400 LD*	**$1,907**	**10**	2	5			3						
7.0	**Procurement Phase**														
7.1	Procurement Services	*1400 LD*	**$2,294**	**14**	2	2		2	2	2	4				
7.2	Meetings & Coordination	*1400 LD*	**$572**	**3**	1	1			1						
-	**-**														
		1400 LD	**$0**	**0**											
		1400 LD	**$0**	**0**											
-	**-**														
		1400 LD	**$0**	**0**											
		1400 LD	**$0**	**0**											
		LUMP SUM TOTAL	**$95,221**		$3,895	$17,622	$4,536	$6,912	$20,280	$12,467	$19,188	$2,928	$2,323	$5,070	$0
		HOURS		**600**	19	89	24	36	120	91	156	16	23	26	0

BREAKDOWN BY PHASE			
1.0	**Survey Services**	**$10,321**	**65**
2.0	**Existing Conditions Assessment**	**$4,981**	**29**
3.0	**Concept Development**	**$7,452**	**48**
4.0	**Schematic Design Phase**	**$13,840**	**86**
5.0	**Design Development Phase**	**$25,912**	**165**
6.0	**Construction Document Phase**	**$29,849**	**190**
7.0	**Procurement Phase**	**$2,866**	**17**
-	**-**	**$0**	**0**
-	**-**	**$0**	**0**
	LUMP SUM TOTAL	**$95,221**	**600**

ALLOWANCE/SUB-CONSULTANTS		
8.0	**Legal Desc & Exhibit**	**$2,272**
ALLOWANCE/SUB-CONSULT SUBTOT		**$2,272**

TOTAL CONTRACT	**$97,493**

LOGANSIMPSON

June 29, 2021
REVISED 07/07/2021

Sandra M. Kukla, AIA, LEED AP
President
DWL Architects + Planners, Inc.
2333 N Central Ave
Phoenix, AZ 85004

Re: Phoenix-Mesa Gateway Airport – Terminal Annex Modernization (2021-027-RFQ)
Proposal for Landscape Architectural Design Services

Dear Sandra:

I have revised the scope and fee based on your email this week. I have reduced the overall fee by $4,100 to meet the target fee. To reduce the fee, I have modified our hours within the following tasks:

- Coordination meetings
- review of the existing site conditions
- Airside Hardscape Design Aesthetics and Sustainability Integration with the Landscape

Logan Simpson is pleased to submit our scope and fee proposal for the Phoenix-Mesa Gateway Airport – (the Project). My general understanding of the scope is that Logan Simpson will provide landscape architectural services (hardscape aesthetics, landscape, and irrigation) from the conceptual design stage through the final 100% Permit Construction Documents (CDs) submittal. After the CDs have been approved by all stakeholders, Logan Simpson will support the pre-construction/bid assistance stage. I have enclosed the following information:

1. Exhibit 'A' - Scope and Fee Proposal
2. Exhibit 'C' - Proposed Fee Breakdown by Personnel and Tasks

Logan Simpson proposes to complete the tasks outlined in the scope for a lump sum fee, which includes both labor and general expenses. Please contact me if you wish to discuss this proposal or require any additional information.

Respectfully,

Jerry Moar, ASLA, LEED AP BD +C
Senior Project Manager

51 West Third Street, Suite 450 Tempe, AZ 85281 Phone: (480) 967-1343 e-mail: Logan Simpson@logansimpson.com

PHOENIX-MESA GATEWAY AIRPORT – TERMINAL ANNEX MODERNIZATION **EXHIBIT 'A'**
PROPOSAL FOR LANDSCAPE ARCHITECTURAL DESIGN SERVICES

PROJECT DESCRIPTION

The Phoenix-Mesa Gateway Airport Authority (PMGAA) is replacing their existing terminal annex. The goal is to convert the existing modular building to a 20,000 S.F building that is similar to phase 3 building. The building program will have four or five gates with retail and restroom space that includes rough-in water and sewer. The airside site improvements will maintain passenger access to outdoor courtyards spaces adjacent to the annex and in-between the ticketing and existing terminal building. The courtyard renovations will maintain seating areas, art, way finding signage, pet area, and landscape. At this time, there is no landside improvements associated with the project. The construction budget is approximately $9 million. The anticipated procurement of the general contractor will be Contractor Management at Risk (CMAR).

The Owner of the Project is the PMGAA. Logan Simpson will be contracted with the prime design consultant, DWL Architects + Planners, Inc. (DWL). DWL will be responsible for continuously providing Logan Simpson with updates to base information and services; including architectural illustrations and plans, updated engineering plans, vertical and horizontal controls for site elements, structures, on- and off-site utilities, site lighting, and any other engineering data (i.e., topographic and Alta survey, flood plains, geotechnical report, fire flow testing). DWL and other design team members will be responsible for any permit fees and submittals to the project stakeholders. All drawings will be developed in AutoCAD 2020.

SCOPE OF SERVICES BY TASKS AND PROJECT DOCUMENTATION

Logan Simpson will be responsible for the landscape architectural design (hardscape aesthetics, landscape, and irrigation) for all phases – conceptual design (15%), schematic design (SD 30%), design development (DD 60%), final Construction Documents (CDs 95% and 100% Permit). Logan Simpson will also support the pre-construction/bid assistance stage of the Project. Logan Simpson will prepare plans per the most current version of the PMGAA and City of Mesa Standard Specifications and Details.

Progress/Coordination Meetings (8) - Logan Simpson will participate in project coordination meetings to review the Project's status, collaborate on the design, coordinate with other project disciplines, and discuss project action items and schedule. It is anticipated there will be twelve (12) total one-hour meetings throughout the Project's design and that all meetings will be held at Video Conference Calls.

PMGAA Coordination/Design Review Meetings (4) - Logan Simpson will participate in the PMGAA Coordination/Design Review meetings and be prepared to answer questions related to the work items we are responsible for designing. It is anticipated there will be four (4) total one-hour meeting throughout the Project design and that all meetings will be held at the Administration Building or as a Video Conference Call.

Project Due Diligence and Site Visit - Logan Simpson will review both the requirements and standards applicable to the Project. Logan Simpson will visit the existing site to evaluate the current conditions, understand site opportunities and constraints, and get an overall contextual sense of the surrounding design. It is anticipated that there will be a plant inventory and salvage requirements for the existing airside courtyard that will be disturbed by construction.

Plant Inventory and Salvage Plan – During the concept stage and as part of the Due Diligence Site Visit, Logan Simpson will identify plants to be salvaged and reused as part of the landscape improvements. Using the base files provided by DWL, Logan Simpson will evaluate, inventory, and tag/flag species to be salvaged. With the data collected, Logan Simpson will prepare plan sheets (1" = 20') containing an inventory table that shows the identification numbers, species, size, condition, and salvage status of each protected plant found during the field activities. The landscape plan will show viable salvage trees and cacti locations to be placed back into the

landscape as part of the Project's landscape improvements.

Airside Hardscape Design Aesthetics and Sustainability Integration with the Landscape - As part of the SD and DD stage, Logan Simpson will review the current site plan and provide input on overall site sustainability, low impact design (LID) techniques, and overall theming/aesthetics that will assist the Project in meeting site goals, needs, and requirements. Logan Simpson will propose standard hardscape paving (color, texture, and materials), and site furnishings (i.e., benches and trash receptacles) layout and schedule. It is anticipated that the final design layout and construction details for all the hardscape improvements including site signage and branding will be completed by DWL and shown on their plans. DWL and the Project Civil Engineer will be responsible for designing the hardscape to meet ADA compliance, including ramps, stairs, and railings. Also, the Project's civil engineer will be responsible for all vehicular circulation and on-site parking (i.e., traffic-related signage and striping, security bollards, curbs, aprons) and building/site equipment/utility pads.

Airside Landscape Design and Construction Documents - The overall landscape approach will be to develop an attractive environment with the plant material contextual to the existing courtyards and sustainable in a low desert environment. The landscape plan will identify the final locations of inert groundcover and vegetation, including contractor-supplied plant materials. The Project will also include a complete plant key, materials schedule, and quantities. Logan Simpson will provide installation details for all landscape components.

Airside Irrigation Design and Construction Documents - Logan Simpson will prepare an irrigation plan for the courtyard improvements. The irrigation plans will identify all necessary piping and equipment required for a fully functioning drip and spray irrigation system. It is anticipated that the new components will be connected into the existing system so there will be no new meter or irrigation controller. Logan Simpson will provide installation details for all irrigation components.

Preliminary Construction Estimate, Technical Specifications, and Quality Control Review - At CD submittal stage, Logan Simpson will prepare an initial estimate of the landscape and irrigation's probable cost of construction. The components will be itemized and quantified with unit prices. Logan Simpson will prepare specifications for the landscape and irrigation components shown on their plans. The specifications will be provided in MS Word, using the design team's CSI standard format. At each submittal stage, Logan Simpson will complete the Project's quality control review from both the Principal and Project Manager.

SCOPE OF DESIGN SERVICES BY PHASES

At each stage of design, Logan Simpson will submit documents electronically (PDFs) to DWL for issuance to the design team and PMGAA reviews. Logan Simpson will incorporate and address all review comments accordingly.

Tasks 1.0 Conceptual Design - (15% submittal)

- Participate in Progress/Coordination Meetings (2), including Project Kick-off Meeting
- Project Due Diligence – review project programming requirements
- Complete Site Visits – document existing site conditions and site context
- Prepare Existing Condition Landscape Plan
- Prepare Conceptual Landscape Plan with a Proposed Plant Palette
- Provide Project Quality Control Review on Documents

Tasks 2.0 Schematic Design Phase - SD (30% submittal – PMGAA's Preliminary Site/Landscape Plan)

- Participate in Progress/Coordination Meetings (2)
- Participate in PMGAA's Design Review Meeting (1)
- Assist with SD Hardscape Plan (layout of flatwork and proposed materials schedule)
- Prepare SD Landscape Plan (Per PMGAA Site Plan Approval)
- Prepare SD Irrigation (mainline layout only with proposed irrigation component schedule)

- Provide Project Quality Control Review on Documents

Tasks 3.0 Design Development - DD (60% Submittal)

- Participate in Progress/Coordination Meetings (2)
- Participate in PMGAA's Design Review Meeting (1)
- Assist with DD Hardscape Plan (final layout of flatwork and furnishings)
- Prepare DD Landscape Plan (Final layout of landscape materials)
- Prepare DD Irrigation (Final layout of irrigation materials)
- Provide Project Quality Control Review on Documents

Tasks 4.0(a) Construction Document - CD (95% submittal with PMGAA's Permit Approval)

- Participate in Project Coordination Meeting (2)
- Participate in PMGAA's Design Review Meeting (1)
- Prepare Landscape and Irrigation Plan and Installation Details
- Prepare Cost Estimate and Technical Specifications
- Provide Project Quality Control Review on Documents

Tasks 5.0(b) Construction Document - CD (Sealed 100% PMGAA Permit Submittal)

- Participate in PMGAA Permit Meeting to review comments (1) and respond to 95% Comments
- Finalize 100% Landscape and Irrigation Plan, Cost Estimate, and Technical Specifications
- Provide Project Quality Control Review on Documents

6.0 PRE-CONSTRUCTION SERVICES

Bid Assistance - It is anticipated that our Final Permit/PMGAA approved Landscape and Irrigation construction documents and specifications (CDs) will be distributed to selected sub-contractors for bid. During the Project Bidding, Logan Simpson will take contractor calls and answer questions that clarify the construction document contents. If required, Logan Simpson will prepare and issue addenda to clarify items during the bidding process further. No time has been included for value engineering and corrections to the plans after the bid process.

Pre-Construction Meeting - Before the commencement of construction, Logan Simpson will attend one pre-construction meeting with the selected General Contractor. The pre-construction meeting aims to discuss their administrative procedures, establish field communication protocol, and review contractual and technical requirements. It is anticipated that this meeting will be held on-site or as a video conference call.

PROPOSED FEE:

Logan Simpson proposes to complete the work described above for a total fee of **$25,550.00.** Direct reimbursable expenses (printing and mileage) are part of the fee. See Exhibit 'B' for the fee breakdown showing personnel, rates, and hours associated with each task. Below is the breakdown of Logan Simpson's hourly rates:

	Direct Labor Rate	overhead %	sub total	profit X%	Total Labor Rate
Principal/LA	$74.00	172.73%	$201.82	10.00%	**$222.00**
Project Manager	$48.00	172.73%	$130.91	10.00%	**$144.00**
Sr. LA/Arborist	$43.00	172.73%	$117.27	10.00%	**$129.00**
Landscape Designer	$30.00	172.73%	$81.82	10.00%	**$90.00**
Irrigation Specialist	$41.00	172.73%	$111.82	10.00%	**$123.00**

ADDITIONAL SERVICES

Logan Simpson will provide project-related services in addition to those identified above if requested in writing by DWL. Such services shall be considered additional services. Logan Simpson's fees for additional services shall be based on an amendment to this Agreement and the firm's standard hourly rates.

ASSUMPTIONS:

Specifically excluded from Logan Simpson's scope of services are any professional design services required by statute or regulation to be performed by other professionals such as architect, civil, electrical, and structural or geotechnical engineer (e.g., buildings, earthwork, piped drainage systems). Also excluded is the generation of any special studies, reports, calculations, or documents, and other items as listed below:

- Revit Modeling
- Illustrative Graphics
- Hardscape Construction Documents
- Landscape Accent Lighting
- Monument and Wayfinding Signage
- Landside Hardscape and Landscape
- Rainwater of Building Greywater Capture System for irrigation system
- Community Outreach
- Artist Collaboration
- Construction Administration Services (i.e. Site Visits, Plant Selection, and Compliance Review)
- Post Construction Services (i.e., Operation/Maintenance Manuals and Warranty Walkthrough)

Logan Simpson Design, Inc.
Terms & Conditions

The services to be performed shall begin upon receipt by the Subconsultant (Logan Simpson Inc.) of a written "Notice to Proceed" from the Consultant (DWL Architects + Planners, Incorporated)

Invoices for services provided will be submitted to the Consultant monthly. For the services' satisfactory performance, the Consultant shall pay the Subconsultant the invoiced amount within 30 days of the invoice date. In the event of a dispute over a portion of the invoice, the Consultant will pay the undisputed portion on time and withhold payment equal to the dispute until the dispute is resolved.

This Agreement may not be assigned or subcontracted, in whole or part, without the Consultant's prior written consent. Subconsultant may not change the project personnel designated in its proposal for this Project without the Consultant's prior approval. Approval by the Consultant of any staff or subcontractor shall not relieve the Subconsultant of its liability or responsibility for the work's proper performance under this Agreement.

All work performed by the Subconsultant shall be performed in a manner consistent with the standard of care of its profession and shall be subject to the Consultant's quality inspection and approval, but such approval shall not relieve the Subconsultant of responsibility for the proper and timely performance of the work. The Subconsultant shall provide sufficient, safe, and adequate facilities for such inspection of the work and shall furnish all information concerning the work and grant the Consultant's duly authorized representatives free access at all reasonable times Subconsultant's facilities where the work under the Agreement is to be performed.

The Consultant shall have the right to direct changes in this Agreement before completion of the work, including but not limited to changes in the Scope of Work. If the change causes an increase or decrease in the cost of or the time required for the Subconsultant's performance under this Agreement, the Subconsultant shall submit to the Consultant a request for adjustment. If a modification to Subconsultant's time or cost is justified, the Consultant will issue an addendum to this Agreement. Addendum will establish a method of Payment for Additional Services to this Agreement. No payment will be made for Additional Services not authorized by the Consultant.

The Consultant shall have the right to terminate this Agreement, in whole or in part, by written notice to the Subconsultant. Upon receipt of this notice, the Subconsultant shall immediately discontinue performance, not place any further orders, and promptly cancel all subcontractors' orders.

In the event of termination for convenience, the Consultant shall pay the Subconsultant for all work performed and accepted by the Consultant before termination plus reasonable termination costs and expenses. However, in no event shall the Consultant be obligated to pay more than the Agreement value less any previously paid funds.

In the event of termination for cause, wherein the Subconsultant has failed to perform any of its obligations or provide the Consultant assurance of adequate performance within ten (10) working days after written request by the Consultant for such assurances, the Consultant may, but is not thereby obligated to do so, undertake any one or more of the following actions:

- declare the Subconsultant to be in default;
- cancel this Agreement in whole or in part;
- withhold payment of any further funds which may be due to the Subconsultant until the default is corrected;
- Pursue any other remedies afforded by law.

To the fullest extent permitted by law, Subconsultant shall defend, indemnify and hold harmless the Consultant and its officers, agents, and employees from and against all claims, demands, suits, loss, damage, injury, and liability, including all costs and expenses, including attorney fees; incurred in connection in addition to that, resulting from or arising out of the negligent acts, errors or omissions of Subconsultant, its subcontractors, or anyone else for whom Subconsultant is legally responsible, in the performance of Subconsultant's services under this Agreement. Such obligation shall not be construed to negate, abridge, or reduce other rights or obligations of indemnity which would otherwise exist as to a party or person described in this Paragraph.

To the fullest extent permitted by law, Consultant shall defend, indemnify and hold harmless the Subconsultant and its officers, agents, and employees from and against all claims, demands, suits, loss, damage, injury, and liability, including all costs and expenses, including attorney fees; incurred in connection in addition to that, resulting from or arising out of the negligent acts, errors or omissions of Consultant, its agents, or anyone else for whom Consultant is legally responsible, in the performance of Consultant's obligations under this Agreement. Such responsibility shall not be construed to negate, abridge, or reduce other rights or obligations of indemnity which would otherwise exist as to a party or person described in this Paragraph.

Unless otherwise required in this Agreement, Subconsultant shall, before commencing any work under this Agreement and during the performance of the work, maintain unimpaired limits of insurance in the following types and amounts: automobile, $1,000,000 per event; general and professional liability, $1,000,000 per occurrence/$2,000,000 aggregate; and worker's compensation at statutory limits required in the state of work.

In no event will Subconsultant and its officers, directors, employees, agents, or stockholders be liable to Consultant for any incidental, indirect, special, consequential, or punitive damages or lost profits. The aggregate total liability of Subconsultant, its officers, directors, employees, agents, or stockholders to Consultant arising from or related to Consultant's engagement of Subconsultant, whether in contract, breach of warranty, tort or otherwise, shall not exceed the greater of the recoveries from the insurance provided, or, if none, an amount equivalent to the fee paid by the Consultant to the Subconsultant in connection with the Project giving rise to the dispute. Subconsultant's liability policies shall provide, or be endorsed to provide, standard ISO separation of insured protection.

Subconsultant's insurance required under this Agreement shall be primary and non-contributory to any insurance available to the Consultant. Subconsultant's policies shall not be endorsed or modified to make them excess over other available insurance; alternatively, if Subconsultant's insurance

states that it is excess or pro-rata, it shall be supported to be primary concerning additional insureds. Subconsultant's indemnity shall not be endorsed or modified to limit the coverage scope for pollution or employment-related practices.

Before commencing the work performance, the Subconsultant shall furnish the Consultant with Certificates of Insurance as evidence of the required insurance.

Subconsultant shall require its subcontractors to indemnify Consultant on the terms required by this Agreement and name Consultant an additional insured on any insurance coverage for which Subconsultant is required under this Agreement to call Consultant an additional insured. The Consultant shall be named as an additional insured on general and automobile liability coverages.

The Subconsultant is an independent contractor, is responsible for the means and methods used in performing the Subconsultant's services, and shall not be regarded as an employee, agent, or partner.

The Subconsultant
shall issue no public releases (including news releases and advertising) relating to this Agreement or the work hereunder without the Consultant's prior written approvalConsultant.

All drawings, specifications, reports, information, or data prepared by or furnished to the Subconsultant in connection with any or all work to be performed under this Agreement shall be the Consultant's property. Subconsultant shall have no liability for any claim, liability, or cost arising out of any unauthorized reuse or modification of any Subconsultant prepared documents without the written authorization of Subconsultant.

Claims, disputes, or other matters in question between the Consultant and Subconsultant arising out of or relating to this Agreement or the breach thereof, in which the amount in dispute is equal to or less than Fifty thousand dollars ($50,000), shall be subject to and decided by arbitration by the Construction Industry Arbitration Rules of the American Arbitration Association currently in effect unless the parties mutually agree otherwise.

Demand for arbitration shall be filed in writing with the other party to this Agreement and with the American Arbitration Association. A request shall be made within a reasonable time after the claim, dispute, or another matter in question has arisen. In no event shall the demand for arbitration be made after the date when the applicable statute of limitations would bar the institution of legal or equitable proceedings based on such claim, dispute, or other matter in question. The award rendered by the arbitrator or arbitrators shall be final, and judgment may be entered upon it by applicable law in any court having jurisdiction thereof.

The prevailing party in any arbitration or legal action between the parties to this action shall be entitled to recover a reasonable sum in compensation of its attorney's fees and all costs incurred in such activity. The determination of the prevailing party and the amount of payment to be awarded to that party shall be made by the judge or arbitrator who decides the claim, dispute, or other matter. Interest shall also accrue and be payable on all liquidated, non-contingent sums at the highest rate permitted by law from the date such amounts became due and payable.

This Agreement constitutes the whole Agreement between parties concerning the subject matter it contains, and there are no terms other than those it holds. No modification or amendment of the Agreement shall be valid unless in writing and signed by the Consultant and the Subconsultant named in this Agreement.

Except for the payment of sums due, neither party shall be liable to the other nor deemed in default under this Agreement if and to the extent that such party's performance of the Agreement is prevented because of force majeure, which includes acts of God, laws of a public enemy, war, riots, civil disorders, and other similar occurrences beyond the control of the party declaring force majeure which such party is unable to prevent by exercising reasonable diligence.

If any term, covenant, condition, or provision of this Agreement is found by a court of competent jurisdiction to be invalid, void, or unenforceable, the remainder of the provisions hereof shall remain in full force and effect, and shall in no way be affected, impaired or invalidated hereby.

This Agreement, and any claim or dispute between the parties to this Agreement, shall be governed by the laws of the State of Arizona.

ACCEPTANCE

Ms. Kukla, please acknowledge your acceptance of this proposal by signing the attached copy and returning it to my attention at the address on the above letterhead. We look forward to working with you on this Project.

Wayne Colebank 07/07/2021

Wayne Colebank, Logan Simpson Design Date

Sandra Kukla, DWL Architects + Planners Date

EXHIBIT 'B'

BASE SERVICES

TASK	DESCRIPTION	Logan Simpson Project Principal/LA	Logan Simpson Sr. Project Manager	Logan Simpson Sr. LA Arborist	Logan Simpson Landscape Designer II	Logan Simpson Irrigation Designer III	TOTAL HOURS	TOTAL LABOR COST	
1.0	**DESIGN - Conceptual Design - (15%)**							**$3,528.00**	
	Participate in Progress/Coordination Meetings (2), including Project Kick-off Meeting		2		1		3	$378.00	
	Project Due Diligence – review project programming requirements		1		3		4	$414.00	
	Complete Site Visits – document existing project site		2		2		4	$468.00	
	Prepare an Existing Condition Landscape Plan			1	4		5	$489.00	
	Prepare a Conceptual Landscape Plan with Proposed Plant Palette		3		12	1	16	$1,635.00	
	Provide Project Quality Control Review on Documents		1				1	$144.00	
2.0	**DESIGN - Schematic Design Phase - SD (30% - Preliminary Site/Landscape Plan Submittal)**							**$3,684.00**	
	Participate in Progress/Coordination Meetings (2)		1		2		3	$324.00	
	Participate in PMGAA Review Meeting (1)		1		1		2	$234.00	
	Assist with SD Hardscape Plan (flatwork materials and furnishings schedule)		2		12		14	$1,368.00	
	Prepare SD Landscape Plan (Per PMGAA Site Plan Approval)		2		10		12	$1,188.00	
	Prepare SD Irrigation Plan (mainline layout only and proposed irrigation component schedule)				2	2	4	$426.00	
	Provide Project Quality Control Review on Internal Documents prior to Submittal		1				1	$144.00	
3.0	**DESIGN - Design Development - DD (60% Submittal)**							**$5,106.00**	
	Participate in Progress/Coordination Meetings (2)		1		1		2	$234.00	
	Participate in PMGAA Review Meeting (1)		1		1		2	$234.00	
	Assist with DD Hardscape Plan (flatwork materials and furnishings schedule)		3		18		21	$2,052.00	
	Prepare DD Landscape Plan (Final Layout of Materials)		4		16		20	$2,016.00	
	Prepare DD Irrigation Plan (Final Layout of Materials)				2	2	4	$426.00	
	Provide Project Quality Control Review on Internal Documents prior to Submittal		1				1	$144.00	
4.0A	**DESIGN - Construction Documents - CD (95% Submittal with City's Site Plan Approval)**							**$8,412.00**	**$12,126.00**
	Participate in Progress/Coordination Meetings (2)		1		2		3	$324.00	
	Participate in PMGAA Review Meeting (1)		1		1		2	$234.00	
	Prepare 95% Landscape Construction Documents including Technical Specs and Cost Estimate		12		44		56	$5,688.00	
	Prepare 95% Irrigation Construction Documents including Technical Specs and Cost Estimate				2	12	14	$1,656.00	
	Provide Project Quality Control Review on Internal Documents prior to Submittal	1	2				3	$510.00	
5.0B	**DESIGN - Construction Documents (100% GMP Submittal and City Permit Submittal)**							**$3,714.00**	
	Participate in PMGAA Review Meeting (1)		1		1		2	$234.00	
	Prepare 100% Construction Documents including Technical Specs and Cost Estimate		4		20	6	30	$3,114.00	
	Provide Project Quality Control Review on Internal Documents prior to Submittal	1	1				2	$366.00	
6.0	**POST DESIGN - Pre-Construction Services**							**$951.00**	
	Bid Assistance		1		6	1	8	$807.00	
	Pre-Construction Meeting		1				1	$144.00	
	ESTIMATED HOURS	2	50	1	163	24	240		
	Hourly Rate	$ 74.00	$ 48.00	$ 43.00	$ 30.00	$ 41.00			
	Overhead	$ 127.82	$ 82.90	$ 74.27	$ 51.82	$ 70.82		**172.73%**	
	Profit	$ 20.18	$ 13.09	$ 11.72	$ 8.18	$ 11.18		**10.00%**	
	DIRECT HOURLY RATE	**$ 222.00**	**$ 144.00**	**$ 129.00**	**$ 90.00**	**$ 123.00**			
	LABOR COST	$ 444.00	$ 7,200.00	$ 129.00	$ 14,670.00	$ 2,952.00			
							DIRECT LABOR COST	**$25,395.00**	
							Printing	$35.00	
							Mileage	$120.00	
							DIRECT EXPENSE COST	**$155.00**	
							TOTAL FEE	**$25,550.00**	

SJM:K/PHX-FP:PMGAA:TAM
July 7, 2021

Ms. Sandra Kukla, LEED AP
President
DWL Architects + Planners, Inc.
2333 N. Central Avenue
PHOENIX, AZ 85004

Via e-mail: kukla@dwlarchitects.com

Dear Sandra:

RE: PHOENIX MESA GATEWAY AIRPORT AUTHORITY (PMGAA)
TERMINAL ANNEX MODERNIZATION PROJECT
FEE PROPOSAL FOR COST CONSULTANCY SERVICES

Thank you very much for inviting Rider Levett Bucknall (RLB) to submit a fee proposal for providing Cost Consultancy Services for the planned Phoenix Mesa Gateway Terminal Annex Modernization project located in Mesa, Arizona.

Project Background

The goal of this project is to provide a replacement / addition for the existing terminal annex building. With the existing modular building has reached its useful lifespan and needs to be replaced.

Per the scoping meeting on June 10th, 2021, the goal is to provide a similar building size to the Phase 3 building, but not as robust.

Program and project goals the airport team discussed in the scoping meeting:

a. Similar design aesthetic to the terminal building complex
b. Maintaining the airport's access to the outdoor courtyard spaces
c. Approximately 20,000 square foot building is anticipated.
d. Four to five Gate hold room spaces, with a preference for 5 gates, making a total 10 to 11 aircraft parking positions.
e. Retail space with access to water and sanitary sewer
f. Restrooms: men's, women's, family with adult changing, and mothers/nursing
g. Address existing security concerns – mixing of sterile area (passenger) with workers entering and exiting from existing terminal building

Project Budget

RLB understands the Project Budget is $9,000,000.

Scope of Work

RLB to provide Cost Consultancy Services including the following:

Attend Project Meetings (2), Prepare One (1) Concept Estimate of Construction Cost including review with the Project Team.

Attend Project Meetings (2), Prepare One (1) Schematic Design Estimate of Construction Cost including reconciliation with the selected CMAR.

Attend Project Meetings (2), Prepare One (1) Design Development Estimate of Construction Cost including reconciliation with the selected CMAR.

Alternate Cost Scope

Attend Project Meetings (2), Prepare One (1) Construction Documents Estimate of Construction Cost including reconciliation with the selected CMAR.

Attend Project Meetings (1), Prepare Guaranteed Maximum Price (GMP) Peer Review of the selected CMAR's proposal to PMGAA.

Proposed Fees

Our fees for providing the following Cost Consultancy Services are as follows:

Program / Concept Design – Prepare one (1) Concept Estimate of Construction Cost
50-hours x $155 / hour - $7,750

Schematic Design – Prepare one (1) Schematic Design Estimate of Construction including reconciliation with the selected CMAR – 80-hours x $155 / hour - $12,400 **

Design Development - Prepare one (1) Design Development Estimate of Construction including reconciliation with the selected CMAR – 120-hours x $155 / hour - $18,600 **

Total Base Fee - $38,750

Overhead – 160% Profit – 10%

Alternate Cost Scope Proposed Fees

Construction Documents - Prepare (1) Construction Documents Estimate of Construction including reconciliation with the selected CMAR – 100-hours x $155 / hour - $15,500 **

GMP Peer Review of Selected CMAR's pricing proposal to PMGAA – 40-hours x $155 / hour - $6,200.

** Please note that proposed fees are based on RLB preparing the preceding milestone estimate.

Exclusions

Please carefully note that our proposed fees specifically do not include the following:

- this fee proposal is based on preparing one (1) construction cost estimate of one (1) design solution for each of the disciplines (Architecture, Structure, Mechanical, Electrical, etc.). Studies of alternative design options, different systems, cost reduction/value engineering, etc., are excluded. If these studies become necessary and desirable, we will prepare an added proposal for your consideration.

- preparation of new cost estimates or amendments to our cost estimates necessitated by changes in the design or by further redesigns beyond the design milestone exercises specifically included within this proposal

- cost estimating associated with any Alternates, Options and/or Value-Engineering / Value-Analysis related items.

Additional Services

If any additional Cost Consultancy Services are requested, then those services will be reimbursed in accordance with our current hourly rates which are as follows:

President, Executive Vice President	$275.00
Senior Vice Presidents, Vice Presidents	$245.77
Principals, Associates, Resident Managers	$225.00
Senior Cost Manager	$159.03
Cost Manager	$130.11
Cost Estimator	$115.66

Terms & Conditions

The terms will be as per DWL Architects + Planner's contract with Owner and the Standard AIA Consultant Agreement. Unless otherwise agreed to in writing, RLB's scope of services is limited to the extent included in this proposal.

Any additional scope, changes in the scope, or additional scope required by contract terms and conditions shall be an additional service for which additional fees will be required.

Acceptance

To signify your acceptance of this proposal, please sign below and return it to me.

In the meantime, if you have any questions, or would like to discuss some aspect of this proposal, please feel free to contact us.

Yours faithfully,

RIDER LEVETT BUCKNALL LTD.

Scott J. Macpherson MRICS
Executive Vice President

Jesse Zunke CM-Lean
Associate

Accepted: _____

Position / Title: _____

Date: _____

EXHIBIT B - COMPENSATION

All compensation for services rendered by Consultant shall be based upon criteria established below. All services must be billed through the Consultant.

1. Fees to be Specified in Contract

Any and all services to be performed under this Contract require approval. All compensation for services shall be identified in writing. The Contract shall describe the scope of services to be performed (by tasks and subtasks, where appropriate), the fees associated with that performance, and any applicable special provisions. Consultant's compensation for services included in this Contract is totaled and set forth in **EXHIBIT A**, "Scope of Services and Fee Schedule".

2. Method of Payment

Subject to the terms of this Contract, PMGAA shall pay Consultant the appropriate rate or fixed price amount for services rendered as described in the Contract only after Consultant has submitted an invoice for services performed and PMGAA has certified and approved each invoice.

For services rendered in accordance with the Contract, Consultant shall submit to PMGAA an invoice depicting tasks performed and/or hours spent for services performed. Invoices must be based on the actual hours and/or expenses incurred for the services completed during the billing period. Consultant's invoices must specify that Consultant has performed the services, and PMGAA must certify and approve each invoice as a condition to payment.

3. Consultant Responsibilities for Compensation

Consultant shall prepare monthly invoices and/or progress reports in accordance with terms specified in the Contract. Progress reports will clearly indicate the progress to date and the amount of compensation due by virtue of that progress. All invoices for payment shall be for work completed unless otherwise agreed to by PMGAA. Invoices/requisitions for payment for services subject to funding by the FAA and/or ADOT shall include the documentation requirements of the FAA and/or ADOT, which are outlined in the *Airport Improvement Program (AIP) Handbook* dated September 30, 2014, or most current version.

4. PMGAA Responsibilities for Compensation

PMGAA agrees to pay Consultant's invoices for payment within 30 calendar days after the invoice is approved. PMGAA may withhold payment on any invoice if it believes that Consultant has not performed the work in a satisfactory manner. If PMGAA withholds payment to Consultant, PMGAA shall promptly notify Consultant and explain the reasons for the decision to withhold payment.

5. Billing Address

All invoices submitted to PMGAA for payment shall be submitted to:

Phoenix-Mesa Gateway Airport Authority
Attn: Engineering and Facilities Director
5835 S. Sossaman Road
Mesa, Arizona 85212

EXHIBIT C - SPECIAL PROVISIONS

1. Civil Rights Act of 1964, Title VI – General

The contractor agrees to comply with pertinent statues, Executive Orders and such rules as are promulgated to ensure that no person shall, on the grounds of race, creed, color or national origin, sex, age or disability be excluded from participating in any activity conducted with or benefiting from Federal assistance.

2. Civil Rights Act of 1964, Title VI – Assurances

During the performance of this Contract, the contractor, for itself, its assignees and successors in interest agrees as follows:

a. Compliance with Regulations – Compliance with Regulations: The contractor (hereinafter includes consultants) will comply with the Title VI List of Pertinent Nondiscrimination Acts And Authorities, as they may be amended from time to time, which are herein incorporated by reference and made a part of this contract.

b. Nondiscrimination – The contractor, with regard to the work performed by it during the contract, will not discriminate on the grounds of race, color, or national origin in the selection and retention of subcontractors, including procurements of materials and leases of equipment. The contractor will not participate directly or indirectly in the discrimination prohibited by the Nondiscrimination Acts and Authorities, including employment practices when the contract covers any activity, project, or program set forth in Appendix B of 49 CFR Part 21.

c. Solicitations for Subcontracts, including Procurements of Materials and Equipment – In all solicitations, either by competitive bidding, or negotiation made by the contractor for work to be performed under a subcontract, including procurements of materials, or leases of equipment, each potential subcontractor or supplier will be notified by the contractor of the contractor's obligations under this contract and the Non-discrimination Acts And Authorities on the grounds of race, color, or national origin.

d. Information and Reports – The contractor will provide all information and reports required by the Acts, the Regulations and directives issued pursuant thereto and will permit access to its books, records, accounts, other sources of information, and its facilities as may be determined by PMGAA or the FAA to be pertinent to ascertain compliance with such Nondiscrimination Acts And Authorities and instructions. Where any information required of a contractor is in the exclusive possession of another who fails or refuses to furnish the information, the contractor will so certify to PMGAA or the FAA as appropriate, and will set forth what efforts it has made to obtain the information.

e. Sanctions for Noncompliance – In the event of a contractor's noncompliance with the Nondiscrimination provisions of this contract, the Recipient will impose such contract sanctions as it or the FAA may determine to be appropriate, including, but not limited to:

i) Withholding of payments to the contractor under the contract until the contractor complies, and/or;
ii) Cancellation, termination, or suspension of the Contract, in whole or in part.

f. Incorporation of Provisions – The contractor will include the provisions of paragraphs one through six of this **EXHIBIT C** in every subcontract, including procurements of materials and leases of equipment, unless exempt by the Acts, the Regulations and directives issued pursuant thereto. The contractor will take action with respect to any subcontract or procurement as PMGAA or the FAA may direct as a means of enforcing such provisions including sanctions for noncompliance. Provided, that if the contractor becomes involved in, or is threatened with litigation by a subcontractor, or supplier because of such direction, the contractor may request PMGAA to enter into any litigation to protect the interests of PMGAA. In addition, the contractor may request the United States to enter into the litigation to protect the interests of the United States.

3. Civil Rights – Title VI List of Pertinent Nondiscrimination Acts and Authorities

During the performance of this contract, the contractor, for itself, its assignees, and successors in interest (hereinafter referred to as the "contractor") agrees to comply with the following non-discrimination statutes and authorities; including but not limited to:

- Title VI of the Civil Rights Act of 1964 (42 U.S.C. § 2000d *et seq*., 78 stat. 252), (prohibits discrimination on the basis of race, color, national origin);
- 49 CFR part 21 (Non-discrimination In Federally-Assisted Programs of The Department of Transportation—Effectuation of Title VI of The Civil Rights Act of 1964);
- The Uniform Relocation Assistance and Real Property Acquisition Policies Act of 1970, (42 U.S.C. § 4601), (prohibits unfair treatment of persons displaced or whose property has been acquired because of Federal or Federal-aid programs and projects);
- Section 504 of the Rehabilitation Act of 1973, (29 U.S.C. § 794 *et seq*.), as amended, (prohibits discrimination on the basis of disability); and 49 CFR part 27;
- The Age Discrimination Act of 1975, as amended, (42 U.S.C. § 6101 *et seq*.), (prohibits discrimination on the basis of age);
- Airport and Airway Improvement Act of 1982, (49 USC § 471, Section 47123), as amended, (prohibits discrimination based on race, creed, color, national origin, or sex);
- The Civil Rights Restoration Act of 1987, (PL 100-209), (Broadened the scope, coverage and applicability of Title VI of the Civil Rights Act of 1964, The Age Discrimination Act of 1975 and Section 504 of the Rehabilitation Act of 1973, by expanding the definition of the terms "programs or activities" to include all of the programs or activities of the Federal-aid recipients, sub-recipients and contractors, whether such programs or activities are Federally funded or not);
- Titles II and III of the Americans with Disabilities Act of 1990, which prohibit discrimination on the basis of disability in the operation of public entities, public and private transportation systems, places of public accommodation, and certain testing entities (42 U.S.C. §§ 12131 – 12189) as implemented by Department of Transportation regulations at 49 CFR parts 37 and 38;
- The FAA's Non-discrimination statute (49 U.S.C. § 47123) (prohibits discrimination on the basis of race, color, national origin, and sex);
- Executive Order 12898, Federal Actions to Address Environmental Justice in Minority Populations and Low-Income Populations, which ensures non-discrimination against minority populations by discouraging programs, policies, and activities with disproportionately high and adverse human health or environmental effects on minority and low-income populations;
- Executive Order 13166, Improving Access to Services for Persons with Limited English Proficiency, and resulting agency guidance, national origin discrimination includes discrimination because of limited English proficiency (LEP). To ensure compliance with Title VI, you must take reasonable steps to ensure that LEP persons have meaningful access to your programs (70 Fed. Reg. at 74087 to 74100);
- Title IX of the Education Amendments of 1972, as amended, which prohibits you from discriminating because of sex in education programs or activities (20 U.S.C. 1681 et seq).

4. <u>Certification Regarding Debarment, Suspension, Ineligibility and Voluntary Exclusion</u>

Consultant, by accepting this Contract, certifies that neither it nor its principals is presently debarred, suspended, proposed for debarment, declared ineligible, or voluntarily excluded from participation in this transaction by any government department or agency.

5. <u>Project Security</u>

As some or all portions of work possible during the Term of this Contract may be located inside the secured area of the Airport, adherence to and familiarity with federal security regulations is essential. For these projects, Consultant shall be responsible for fulfilling the security requirements described herein.

a. <u>Secured Area Access</u> – All Consultant personnel who require unescorted access to the secured area of the Airport, prior to the issuance of an Airport Identification badge, must successfully complete the Security Badge Application and Security Badge Authorization forms.

b. Employee Security Badges – If deemed necessary by PMGAA subcontractor personnel performing work functions in accordance with this Contract shall obtain and properly display an Airport security badge. Consultant shall submit a Security Badge Application form to the PMGAA security office for each employee requiring unescorted access, along with the current fee for each badge. Badge fees are identified on the current *Airport Fees, Services and Rental Rates* available via the Airport website at www.gatewayairport.com and are subject to change.

i. All fees must be paid to PMGAA by cash or check.
ii. Airport Security Badge Application forms and instructions are available via the Airport website at www.gatewayairport.com.
iii. An authorized representative of Consultant must also obtain and submit a Security Media Authorization form, which is to be submitted to the PMGAA badging office. The Security Media Authorization form and instructions are available via the Airport website at www.gatewairport.com.
iv. A training class on aviation security must be successfully completed before individuals are issued a badge. Fees for the security badge include attendance for the necessary training classes. Attendance at the security classes and issuance of the security badge may take two hours per person.
v. Additional information, including a "Frequently Asked Questions" is available via the Airport website at www.gatewairport.com or by contacting the PMGAA Badging Office at (480) 988-7522. The Badging Office is located at 5803 S. Sossaman Road, Mesa AZ 85212.
vi. Consultant shall immediately notify the PMGAA Badging Office of any Consultant personnel whose employment status has changed.
vii. Consultant shall retrieve all security badges and keys and return them to the PMGAA Badging Office. A fee, as indicated on the most current *Airport Rates and Charges Schedule*, will be charged for each badge that is damaged, lost or not returned.
viii. The PMGAA Badging Office will require a completed Security Badge Application from each Consultant employee so certified by Consultant as requiring such before a Security Badge is issued.
ix. Under certain circumstances and out of control of PMGAA, security measures may change on short notice. No deviations from any security measure shall be allowed at any time.
x. At all times, aircraft shall have the right-of-way over all vehicle traffic.

c. Fines – Due to both the safety and security precautions necessary at the Airport, any failure of the Consultant to adhere to prescribed Airport requirements/regulations has consequences that may jeopardize the health, welfare and lives of Airport customers and employees, as well as the Consultant's own employees. Therefore, if Consultant is found to be in non-compliance with any security, airfield badging/licensing and airfield safety requirement, a Notice of Violations (NOV) may be issued. A current listing of fines is available by contacting the PMGAA Badging Office.

6. Standard Terms & Conditions

PMGAA's Standard Terms & Conditions (in **EXHIBIT D** attached) include clauses that pertain to both construction and professional services. For such, the term "contractor" is to be considered same as "consultant." If a clause implies construction service then it is waived for a professional services contract. PMGAA reserves the right to make that determination if there is a conflict.

7. Federal and State Guidelines and Regulations

All work performed under this Contract must satisfy FAA and applicable agency standards, and be accomplished in accordance with applicable federal, state and local guidelines and regulations, including FAA Advisory Circulars, NEPA and Arizona environmental statutes.

Consultant shall perform the services as described in approved Contract in accordance with the applicable requirements imposed by PMGAA, ADOT, FAA and any other applicable sponsoring agencies. Consultant and its subconsultants/subcontractors, if any, shall comply with any and all applicable laws, regulations, executive orders, policies, guidelines, and any other requirements for FAA Airport Improvement Program (AIP) projects. Consultant shall provide PMGAA all information, reports, documents, and/or certifications requested by PMGAA for the satisfaction of any grant requirements for the reimbursement of services, including, without limitation, identifying

the specific services provided by Consultant and the billing period(s) during which services were or are to be provided. Nothing herein shall be construed as making the FAA or ADOT a party to this Contract.

8. Right to Contract With Other Firms

PMGAA shall have the right to contract with other firms and/or persons and/or to self-perform additional services, which may be the subject of this Contract. Consultant shall conduct its operations and perform any services authorized under the Contract so as not to interfere with or hinder the progress of completion of the work being performed by PMGAA and/or other firms and/or persons. Consultants working on the same project shall cooperate with each other in the performance, scheduling, and, if applicable, the integration of their respective services.

9. Independent Contractor Status

At all relevant times, Consultant is - and shall remain - an independent contractor with regard to performance of its services. PMGAA retains no control over Consultant, the performance of its work or services, or the safety of its employees. Consultant is not authorized to enter into any contract or commitment, authorize any payment, or accept any document, services, goods or materials for, in the name of, or on behalf of PMGAA.

EXHIBIT D – PMGAA STANDARD TERMS & CONDITIONS

1. **Certification.** Consultant certifies:
   a. The award of this Contract did not involve collusion or other anti-competitive practices.
   b. It shall not discriminate against any employee or applicant for employment in violation of Federal Executive Order 11246, or A.R.S. Section 31-1461, et. seq.
   c. It has not given, offered to give, nor intends to give at any time hereafter, any economic opportunity, future employment, gift, loan, gratuity, special discount, trip, favor, or service to a public servant in connection with this Contract; and Consultant hereby certifies that the individual signing this Contract is an authorized agent for Consultant and has the authority to bind the Consultant to the Contract.

2. **Termination of Contract.**

   a. PMGAA reserves the right to cancel this Contract in whole or in part due to failure of Consultant to carry out any term, promise, or condition of the Contract. At least ten (10) business days before terminating the Contract, PMGAA will issue a written notice of default specifying one of the following reasons. PMGAA shall, at all times during the term of the Contract or any extension term thereto, have the sole authority to determine if the default has been cured to its satisfaction.

      (1) Consultant has provided personnel that do not meet the requirements of the Contract.

      (2) Consultant has failed to perform adequately the stipulations, conditions or services/specifications required in this Contract.

      (3) Consultant has attempted to impose on PMGAA personnel or materials, products, or workmanship of unacceptable quality.

      (4) Consultant has failed to furnish the required service(s) and/or product(s) within the time stipulated in the Contract or associated Authorization of Services.

      (5) Consultant has failed to make progress in the performance of the requirements of the Contract or Authorization of Services, or Consultant fails to give PMGAA adequate assurance the Consultant will perform the Contract in full and on time.

      (6) Each payment obligation of PMGAA created hereby is conditioned on the availability of PMGAA, state, or federal funds appropriated for payment of the obligation. If funds are not available or allocated by PMGAA for continuance of service under this Contract, then PMGAA may terminate the Contract. PMGAA shall promptly notify Consultant regarding the service that may be affected by a shortage of funds. No penalty accrues to PMGAA if this provision is exercised, and PMGAA shall not be liable for any future payments due or for any damages as a result of termination under this paragraph.

   b. This Contract may be terminated at any time by mutual written consent or by PMGAA - with or without cause - provided the terminating party gives fourteen (14) calendar days' advance written notice to the other party. PMGAA may terminate this Contract, in whole or in part, for PMGAA's convenience and with fourteen (14) days' written notice. If this Contract is terminated, then PMGAA is liable only for services rendered and material received, certified, and approved by PMGAA under the Contract before the termination effective date.

3. **Dispute Resolution**.

   a. **Negotiations**. If a dispute arises out of or relates to this Contract or its breach, the parties to this Contract shall endeavor to settle the dispute through direct discussions as a condition precedent to mediation or binding dispute resolution.

   b. **Mediation**. Should the parties to this Contract be unable to resolve their dispute through direct negotiations, the parties to this Contract, upon the written request of either, shall engage in mediation, to be administered privately by a mediator and according to rules mutually agreed upon by the parties to this Contract, or, the absence of such mutual agreement, by a mediator appointed by JAMS and

administered by JAMS in accordance with its then-current mediation rules. The fees and costs of mediation shall be split equally by the parties to this Contract, but subject to reallocation following binding dispute resolution.

c. **Binding Dispute Resolution**. Should the parties to this Contract be unable to resolve their dispute through direct negotiations or mediation, either party may, within the time limitations for bringing claims under Arizona law and this Contract, commence formal dispute resolution proceedings. Both parties to this Contract consent to binding arbitration administered by JAMS according to its then current arbitration rules, provided, however, that (i) in the event both parties agree, the arbitration may be administered privately by an arbitrator and according to rules mutually agreed upon by the parties to this Contract, and (ii) in the event any party seeks relief against the other party or against a non-party which cannot fully be granted in arbitration, by reason of non-joinder or otherwise, the parties to this Contract are excused from this arbitration requirement and the parties to this Contract shall proceed in the state or federal courts of competent jurisdiction and located in Maricopa County, Arizona. In any arbitration or litigation, the prevailing party shall be entitled to an award of its reasonable attorneys' fees and costs as determined by the arbitrator or court as applicable.

4. **Independent Contractor.** At all times, each party acts in its individual capacity not as agent, employee, partner, joint venturer, or associate of the other party. An employee or agent of one party may not be deemed or construed to be the employee or agent of the other party for any purpose whatsoever. Neither Consultant nor any of its employees are entitled to compensation from PMGAA in the form of salaries, paid vacation, or sick days. PMGAA will not provide any insurance to Consultant, including *Workers' Compensation* coverage. PMGAA will not withhold FICA, taxes, or any similar deductions from PMGAA's payments under this Contract.

5. **Affirmative Action.** Consultant shall abide by all the federal and state of Arizona provisions for equal opportunity in the work place.

6. **Human Relations**. Consultant shall abide by all the federal and state of Arizona provisions against discrimination of disadvantaged business enterprises in applicable PMGAA contracts.

7. **Non-Exclusive Contract**. This Contract is for the sole convenience of PMGAA. PMGAA reserves the right in its discretion to obtain the same or similar goods or services from any other source.

8. **Americans with Disabilities Act.** Consultant shall comply with all applicable provisions of the *Americans with Disabilities Act* (Public Law 101-336, 42 U.S.C. 12101-12213) and applicable federal regulations under the *Act*.

9. **Confidentiality of Records**. Consultant shall establish and maintain procedures and controls that are acceptable to PMGAA for the purpose of assuring that no information contained in its records or obtained from PMGAA or from others in carrying out its functions under the Contract shall be used by or disclosed by it, its agents, officers, or employees, except as required to efficiently perform duties under this Contract. Persons requesting such information should be referred to PMGAA. Consultant also agrees that any information pertaining to individual persons shall not be divulged other than to employees or officers of Consultant as needed for the performance of duties under the Contract, unless otherwise agreed to in writing by PMGAA.

10. **Gratuities.** PMGAA may, by written notice to the Consultant, cancel this Contract if it is found that gratuities, in the form of entertainment, gifts or otherwise, were offered or given by Consultant or any agent or representative of Consultant, to any officer or employee of PMGAA involved in the amending, or the making of any determinations with respect to the performing of such Contract. If this Contract is canceled by PMGAA under this provision, PMGAA shall, in addition to any other rights and remedies, repay to the Consultant the amount of the gratuity.

11. **Applicable Law.** This Contract shall be governed by, and PMGAA and Consultant shall have, all remedies afforded each by the *Uniform Commercial Code*, as adopted in the state of Arizona, except as otherwise provided in this Contract or in laws pertaining specifically to PMGAA. This Contract shall be governed by

the laws of the state of Arizona, and suits pertaining to this Contract shall be brought only in federal or state courts in the state of Arizona.

12. **Contract**. This Contract is based on and the result of a negotiated Scope of Work and Proposal, Bid or Statement of Qualifications submitted by Consultant under the Request for Qualifications, 2021-027-RFQ. The Contract contains the entire agreement between PMGAA and Consultant. No prior oral or written agreements, contracts, proposals, negotiations, purchase orders, or master agreements (in any form) are enforceable between the parties.

13. **Contract Amendments**. This Contract shall be modified only by a written amendment signed by the PMGAA Executive Director or his/her designee, and persons duly authorized to enter into contracts on behalf of Consultant.

14. **Provisions Required by Law**. Each and every provision of law and any clause required by law to be in the Contract shall be read and enforced as though it were included herein, and if through mistake or otherwise any such provision is not inserted, or is not correctly inserted, then upon the application of either party the Contract shall forthwith be physically amended to make such insertion or correction.

15. **Severability.** The provisions of this Contract are severable to the extent that any provision or application held to be invalid shall not affect any other provision or application of the Contract, which may remain in effect without the valid provision, or application.

16. **Protection of Government Property.** Consultant shall use reasonable care to avoid damaging all PMGAA property, including buildings, equipment, and vegetation (such as trees, shrubs, and grass). If Consultant damages PMGAA's property in any way, Consultant shall immediately report such damage to PMGAA and repair or replace the damage at no cost to PMGAA, as directed by the PMGAA Executive Director. If Consultant fails or refuses to repair or replace the damage, then PMGAA may terminate the Contract, and PMGAA shall deduct the repair or replacement cost from money due Consultant under the Contract.

17. **Interpretation – Parol Evidence.** This Contract is intended by the parties as a final expression of their agreement and is intended also as a complete and exclusive statement of the terms thereof. No course of prior dealings between the parties and no usage of the trade shall be relevant to supplement or explain any term used in this Contract. Acceptance or acquiescence in a course of performance rendered under this Contract shall not be relevant to determine the meaning of this Contract even though the accepting or acquiescing party has knowledge of the nature of the performance and opportunity to object.

18. **Subcontracts.** Consultant shall not assign any rights or interest nor enter into any subcontract with any other party to furnish any of the materials, goods or services specified herein without the prior written permission of PMGAA. PMGAA may, at its sole discretion, accept or reject proposed subcontractors or assignment. PMGAA shall notify Consultant of its acceptance or rejection within forty-five (45) days or written request by Consultant. All subcontracts shall comply with federal and state laws and regulations applicable to the materials, goods or services covered by the subcontract and shall include all the terms and conditions set forth herein, which shall apply with equal force to the subcontract, as if the subcontractor were the Consultant referred to herein. Consultant is responsible for Contract performance whether subcontractors are used.

19. **No Waiver.** No provision in this Contract shall be construed, expressly or by implication, to waive either party's existing or future claim, right, or remedy available by law for breach of contract. The failure of either party to insist on strict performance of any Contract term or condition; to exercise or delay exercising any right or remedy provided in the Contract or by law; or to accept materials, services, or Consultant's services under this Contract or imposed by law, shall not be deemed a waiver of any right of either party to insist upon strict performance of the Contract.

20. **Warranties.** Consultant warrants that all materials and services delivered under this Contract shall conform to the specifications thereof. Mere receipt of shipment of the material or service specified and any inspection incidental thereto by PMGAA, shall not alter or affect the obligations of Consultant or the rights of PMGAA under the foregoing warranties. Additional warranty requirements may be set forth in this Contract.

21. **Indemnification.** To the fullest extent permitted by law, Consultant shall indemnify and hold harmless PMGAA, its officers and employees (collectively the "Indemnitees") from liabilities, damages, losses and costs, including reasonable attorney fees and court costs but only to the extent caused by the negligence, recklessness or intentional wrongful conduct of Consultant or other persons employed or used by Consultant in the performance of this Contract.

22. **Right to Assurance.** Whenever one party to this Contract in good faith has reason to question the other party's intent to perform, the former party may demand that the other party give a written assurance of this intent to perform. If a demand is made and no written assurance is given within five (5) business days, the demanding party may treat this failure as an anticipatory repudiation with this Contract.

23. **Advertising.** Consultant shall not advertise or publish information concerning this Contract without prior written consent of PMGAA.

24. **Right to Inspect.** PMGAA may, at reasonable times, and at PMGAA's expense, inspect the place of Consultant's or any of Consultant's subcontractor's business, which is related to the performance of this Contract or related subcontract.

25. **Force Majeure.** In the event either party shall be delayed or hindered in or prevented from the performance of any covenant, agreement, work, service, or other act required under this Contract to be performed by such party ("Required Act"), and such delay or hindrance is due to causes entirely beyond its control such as riots, insurrections, martial law, civil commotion, war, fire, flood, earthquake, or other casualty or acts of God ("Force Majeure Event"), then the performance of such Required Act shall be excused for the period of delay and the time period for performance of the Required Act shall be extended by the same number of days in the period of delay. For purposes of this Contract, the financial inability of Consultant to perform any Required Act, including, without limitation, failure to obtain adequate or other financing shall not be deemed to constitute a Force Majeure Event. A Force Majeure Event shall not be deemed to commence until ten (10) days before the date on which the party who asserts some right, defense, or remedy arising from or based upon such Force Majeure Event gives written notice thereof to the other party. If abnormal adverse weather conditions are the basis for a claim for an extension of time due to a Force Majeure Event, the written notice shall be accompanied by data substantiating (a) that the weather conditions were abnormal for the time and could not have been reasonably anticipated and (b) that the weather conditions complained of had a significant adverse effect on the performance of a Required Act. To establish the extent of any delay to the performance of a Required Act due to abnormal adverse weather, a comparison will be made of the weather for the time of performance of the Required Act with the average of the preceding ten (10) years' climatic range based on the National Weather Service statistics for the nearest weather reporting station to the Premises. No extension of time for or excuse for a delay in the performance of a Required Act will be granted for rain, snow, wind, cold temperatures, flood, or other natural phenomena of normal intensity for the locality where the Premises are located.

26. **Inspection.** All material or service is subject to final inspection and acceptance by PMGAA. Material or service failing to conform to the specifications of this Contract will be held at Consultant's risk and may be returned to Consultant. If so returned, all costs are the responsibility of Consultant. Noncompliance shall conform to the cancellation clause set forth in this Contract.

27. **Exclusive Possession.** All services, information, computer program elements, reports, and other deliverables, which may be created under this Contract, are the sole property of PMGAA and shall not be used or released by Consultant or any other person except with prior written permission by PMGAA.

28. **Title and Risk of Loss.** The title and risk of loss of materials or services shall not pass to PMGAA until PMGAA actually receives the material or service at the Airport, unless otherwise provided within this Contract.

29. **Liens.** All materials, services, and other deliverables supplied to PMGAA under this Contract must be free of all liens and other encumbrances. Upon request of PMGAA, Consultant shall provide a formal release of all liens.

30. **Licenses.** Consultant shall maintain in current status all federal, state, and local licenses and permits required for the operation of the business conducted by Consultant as applicable to this Contract.

31. **Subsequent Employment.** PMGAA may cancel this Contract without penalty or further obligation in accordance with A.R.S. Section 38-511 if any person significantly involved in initiating, negotiating, securing, drafting, or creating the contract, on behalf of the PMGAA is or becomes, at any time while the Contract or any extension of the contract is in effect, an employee of, or a contractor to any other party to this Contract with respect to the subject matter of the Contract. Such cancellation shall be effective when the parties to this Contract receive written notice from PMGAA, unless the notice specifies a later time.

32. **Clean Up.** Consultant shall at all times keep Contract performance areas, including storage areas used by the Consultant, free from accumulation of waste material or rubbish and, prior to completion of the work, remove any rubbish from the premises and all tools, scaffolding, equipment and materials not property of PMGAA. Upon completion of any repair, Consultant shall leave the work and premises in clean, neat, and workmanlike condition.

33. **Patents.** Consultant shall defend, indemnify, and hold harmless PMGAA, its officers and employees from all liabilities, claims, damages, costs, or expenses, including, but not limited to attorneys' fees, for any alleged infringement of any person's patent rights or copyrights in consequence of the use by PMGAA, its officers, employees, agents, and other duly authorized representatives of tangible or intellectual property supplied to PMGAA by Consultant under this Contract.

34. **Records and Audit Rights.** Consultant's and all of its approved subcontractors' books, records, correspondence, accounting procedures and practices, and any other supporting evidence relating to this Contract, including the papers of all Consultant and subcontractor employees that work on the Contract (all the foregoing collectively referred to as "Records"), must be open to inspection and subject to audit and/or reproduction during normal working hours by PMGAA. PMGAA is entitled to evaluate and verify all invoices, payments or claims based on Consultant's and its subcontractor's actual costs (including direct and indirect costs and overhead allocations) incurred or units expended directly in the performance of work under this Contract. For any audit under this Section, Consultant and its subcontractors hereby waive the right to keep such Records confidential. PMGAA is entitled to access to these Records from the effective date of this Contract for the duration of the work and until five years after the date of final payment by PMGAA to Consultant under the Contract. During normal working hours, PMGAA is entitled to access to all necessary Consultant and subcontractor facilities and shall be provided adequate and appropriate workspace, in order to conduct audits under this Section. PMGAA shall give Consultant or subcontractors reasonable advance notice of intended audits. Consultant shall require its subcontractors to comply with the provisions of this Section by including its requirements in all subcontracts related to this Contract.

35. **E-Verify Requirements.** To the extent applicable under A.R.S. § 41-4401, Consultant and its subcontractors warrant compliance with all federal immigration laws and regulations that relate to their employees, and compliance with the E-Verify requirements under A.R.S. §23-214(A). Consultant's or its subcontractors' failure to comply with such warranty shall be deemed a material breach of this Contract and may result in the termination of this Contract by PMGAA. PMGAA shall have the right to inspect the papers of Consultant's and any of Consultant's subcontractor's employee who works on this Contract to ensure the Consultant is complying with this paragraph.

EXHIBIT E – CONSULTANT'S RFQ SUBMITTAL

Consultant's Statement of Qualifications in response to Phoenix-Mesa Gateway Airport Authority's Solicitation 2021-027-RFQ dated May 13, 2021, is hereby incorporated herein and made part of this Contract.

Phoenix-Mesa Gateway Airport Authority
5835 S Sossaman Road
Mesa, Arizona 85212-6014
www.gatewayairport.com

Management Information Report

To: **Board of Directors**
From: **Chuck Odom, Chief Financial Officer**
Through: **J. Brian O'Neill, A.A.E., Executive Director/CEO**
Re: Solicitation Notification
Date: **June 17, 2021**

This report is to provide notification of the active and upcoming solicitations to help ensure compliance with the Phoenix-Mesa Gateway Airport Authority procurement transparency clause. The active activities include the following:

Active/Pending Solicitations

Type Solicitation	Number	Title	Anticipated Contract Award (Board Action)
Request for Proposals	2021-021-RFP	Janitorial Services	July 2021
Request for Qualifications	2021-027-RFQ	Terminal Annex Modernization Design Services	July 2021
Invitation for Bid	2021-017-IFB	Alpha Apron Expansion Phase III	July 2021
Request for Qualifications	2022-002-RFQ	CMAR for Terminal Annex Modernization	September 2021
Request for Proposals	2022-001-RFP	Master Developer, Gateway*East*	October 2021

Future Solicitations

Type Solicitation	Number	Title	Scheduled for Release	Anticipated Contract Award (Board Action)
Invitation for Bid	2022-004-IFB	Taxiway W Rehabilitation	July 2021	September 2021
Request for Proposals	2022-003-RFP	Parking Access Revenue Control System	July 2021	October 2021
Request for Qualifications	2022-005-RFQ	Fabrication and Installation of Signs	August 2021	October 2021

Equipment Disposals

Fiscal year totals from sales of decommissioned / nonworking equipment total $33,801.

If you have any questions about the solicitations or the procurement process, please feel free to contact me at 480-988-7613.

Phoenix-Mesa Gateway Airport Authority
5835 S Sossaman Road
Mesa, Arizona 85212-6014
www.gatewayairport.com

Management Information Report

To: Board of Directors
From: Chuck Odom, Chief Financial Officer
Through: J. Brian O'Neill, A.A.E., Executive Director/CEO
Re: February 2021 Financials
Date: July 20, 2021

Attached is the monthly Financials Report for May 2021.

Phoenix-Mesa Gateway Airport Authority
AIRPORT - All Operations P&L
May, 2021

	Month of May 2021				Y-T-D as of May 2021			
	May FY20 Actual	May FY21 Actual	YOY Variance	B/(W)	YTD FY20 Actual	YTD FY21 Actual	Y-T-D Variance	B/(W)
Aeronautical Operating Revenues								
Aircraft Parking	33,953	29,072	(4,881)	-14%	207,499	219,800	12,301	6%
Fuel Flowage Fees	43,506	78,583	35,077	81%	550,253	647,465	97,212	18%
Landing Fees	63,409	167,596	104,187	164%	1,116,580	1,359,858	243,278	22%
Lease Income Aero	196,398	243,389	46,991	24%	2,702,639	2,501,129	(201,510)	-7%
Fuel Sales	385,340	422,871	37,531	10%	5,514,833	4,908,334	(606,499)	-11%
Services Sold - Aero	334,631	562,719	228,088	68%	4,175,093	5,245,376	1,070,283	26%
Sub-total Aero Operating Revenues	1,057,237	1,504,230	446,993	42%	14,266,897	14,881,962	615,065	4.3%
Non-Aeronautical Operating Revenues								
Concessions	35,713	76,929	41,216	115%	724,958	657,600	(67,358)	-9%
Lease Income Non-Aero	105,528	124,666	19,138	18%	1,102,082	1,207,465	105,383	10%
Parking	87,179	242,571	155,392	178%	2,867,771	2,319,751	(548,020)	-19%
Rental Car Fees	23,737	130,669	106,932	450%	1,665,585	1,349,115	(316,470)	-19%
Svcs Sold - Non Aero	6,800	3,003	(3,797)	-56%	198,159	170,787	(27,372)	-14%
Sub-total Non-Aero Operating Revenues	258,957	577,838	318,881	123%	6,558,555	5,704,718	(853,837)	-13%
Total Operating Revenues	**1,316,194**	**2,082,068**	**765,874**	**58%**	**20,825,452**	**20,586,680**	**(238,772)**	**-1%**
Operating Expenses								
Costs of Goods Sold	138,948	268,160	(129,212)	-93%	3,171,580	2,749,530	422,050	13%
Personnel	686,689	925,936	(239,247)	-35%	8,207,975	8,054,214	153,761	2%
Comm & Utilities	63,814	70,239	(6,425)	-10%	752,307	768,292	(15,985)	-2%
Contractual Services	282,599	374,263	(91,664)	-32%	4,338,476	4,226,018	112,458	3%
Insurance	30,218	46,422	(16,204)	-54%	471,127	494,280	(23,153)	-5%
Other	240,671	204,755	35,916	15%	530,900	324,562	206,338	39%
Repair & Maintenance	77,188	218,962	(141,774)	-184%	631,842	670,475	(38,633)	-6%
Supplies & Materials	68,736	76,350	(7,614)	-11%	877,614	688,941	188,673	21%
Air Service Incentives [2,000,000]	0	0	0	0	0	0	0	0
Operating Contingency [2,313,872]	0	0	0	0	0	0	0	0
Total Operating Expenses	**1,588,863**	**2,185,087**	**(596,224)**	-38%	**18,981,821**	**17,976,312**	**1,005,509**	5%
Operating Income (Loss)	**(272,669)**	**(103,019)**	**169,650**	62%	**1,843,631**	**2,610,368**	**766,737**	42%
	-20.7%	-4.9%			8.9%	12.7%		
Depreciation		1,417,632				15,668,643		
CRRSAA Act Recovery		707,987						

Phoenix-Mesa Gateway Airport Authority
5835 S Sossaman Road
Mesa, Arizona 85212-6014
www.gatewayairport.com

Management Information Report

To: **Board of Directors**
From: **Bob Draper, Engineering and Facilities Director**
Through: **Chuck Odom, Chief Financial Officer**
J. Brian O'Neill, A.A.E., Executive Director/CEO
Re: Impractical Procurement – CrossPoint Testing and Inspection Services, LLC.
Date: **June 16, 2021**

CrossPoint Testing and Inspection Services, LLC. (CrossPoint), was hired to perform structural steel and welding inspection and testing for the new Air Traffic Control Tower in February, 2021. The original contracted amount for services was $30,450.

Due to unforeseen material and labor supply shortages associated with the COVID-19 pandemic, unanticipated multiple and concurrent shifts at multiple locations, and an additional scope of Spray Applied Fire-Proofing inspection and testing, PMGAA staff has issued a change order to CrossPoint. These changes resulted in an additional amount of $56,750.00 bringing the total contract amount to $87,200.00. Airport staff have reviewed the additional costs and determined them to be reasonable and necessary.

Since CrossPoint had already conducted a large portion of the inspection and testing for the tower and, in order to continue the construction without any delays and those associated costs of delays, PMGAA staff approved the above changes as provided under Impractical Procurements, as defined under PMGAA's Procurement Policy 19-27. The total cost of the project remains unchanged at $29,359,319.

Phoenix-Mesa Gateway Airport Authority
5835 S Sossaman Road
Mesa, Arizona 85212-6014
www.gatewayairport.com

Management Information Report

To: **Board of Directors**
From: **Bob Draper, Engineering and Facilities Director**
Through: **Chuck Odom, Chief Financial Officer**
J. Brian O'Neill, A.A.E., Executive Director/CEO
Re: Fuel Facility Expansion Project Change Orders
Date: **June 17, 2021**

On June 16, 2020, the Board approved a contract for the Fuel Facility Expansion project with SDB, Inc., resolution #20-25, in the amount of $1,058,814.12. Since the project has been underway, Airport staff has issued four change orders against the contract for required modifications as a result of new Fire/Fuel Code requirements and safety concerns, resulting in a final total contract amount of $1,129,932.77.

The change orders include:

Change order #1: MRZ Tax Credit.	deduct	(40,812.51)
Change order #2: Added an overfill protection system that is necessary to keep the fuel storage and delivery devices up to the new and evolving National Fire Protection Association (NFPA) 407 Standard for Aircraft Fuel Servicing requirements.	addition	$66,893.08
Change order #3: Mobile refueler, dispensing, and metering equipment and calibrations to meet the regulatory requirements from the scope modification in change order #2.	addition	$20,611.00
Change order #4 Relocation of fire hydrant and bollards for safety concerns, addition of lighting over the bollards to illuminate the area to increase visibility on the blind side of the fueling trucks, and future conduit installation for future improvements.	addition	$24,427.08

The current remaining budget unencumbered for the project after the above change orders is $37,768.00. This project has been completed and closed by Airport staff.

Phoenix-Mesa Gateway Airport Authority
5835 S Sossaman Road
Mesa, Arizona 85212-6014
www.gatewayairport.com

Management Information Report

To: Board of Directors
From: Chuck Odom, CFO
Through: J. Brian O'Neill, A.A.E., Executive Director/CEO
Re: Storm Damage - Emergency Procurements
Date: July 20, 2021

On the evening of July 9, 2021, a severe thunderstorm, with potent outflows and blowing dust, swept across Maricopa and Pinal Counties, to include the Airport. Due to the pronounced wall of dust, with strong winds, traveling across the Airport, large amounts of dust blew into the terminal causing several safety, security, and cleanliness issues. Immediate action was required to ensure a safe, secure, and clean facility for the traveling public. Additionally, the storm caused 18 trees to fall or snap and another 67 trees had broken branches, all of which needed to be removed.

On July 10, 2021 PMGAA Executive Staff authorized the emergency procurement of property restoration with Belfor Property Restoration for an amount not to exceed $16,000.00 for Terminal Clean-up. In addition, an estimate of approximately $12,295.00 was approved by Executive Staff for landscape clean-up with Brightview Landscape Service.

In accordance with PMGAA's Procurement Policy, this report is to notify the Board of the emergency procurement for these urgently needed services. Staff reviewed the quotes to ensure pricing was in line with the expected material and services to provide satisfactory work results.

NOTICE OF MEETING OF THE
PHOENIX-MESA GATEWAY AIRPORT AUTHORITY
BOARD OF DIRECTORS

NO BOARD MEETING IN AUGUST

Pursuant to A.R.S. § 38-431.02, notice is hereby given to the members of the Phoenix-Mesa Gateway Airport Authority and to the public that the Phoenix-Mesa Gateway Airport Authority will hold a meeting open to the public on **Tuesday, September 21, 2021 beginning at 9:00 a.m.** in the Board Room (Saguaro A & B) of the Gateway Administration Building, 5835 South Sossaman Road, Mesa, Arizona. Members of the Phoenix-Mesa Gateway Airport Authority may attend either in person or by telephone. The Board may vote to hold an executive session for the purpose of obtaining legal advice from the Board's attorney on any matter listed on the agenda pursuant to A.R.S. § 38-431.03 (A)(3)&(4).

Persons with a disability may request a reasonable accommodation, such as a sign language interpreter, by contacting Misty Johnson at 480-988-7607 or mrjohnson@gatewayairport.com. Requests should be made as early as possible to allow time to arrange the accommodation.

NOTICE AND AGENDA OF MEETING OF THE
PHOENIX-MESA GATEWAY AIRPORT AUTHORITY
BOARD OF DIRECTORS

Pursuant to A.R.S. § 38-431.02, notice is hereby given to the members of the Phoenix-Mesa Gateway Airport Authority and to the public that the Phoenix-Mesa Gateway Airport Authority will hold a meeting open to the public on **Tuesday, September 21, 2021 beginning at 9:00 a.m.** in the Board Room (Saguaro A & B) of the Gateway Administration Building, 5835 South Sossaman Road, Mesa, Arizona. Members of the Phoenix-Mesa Gateway Airport Authority may attend either in person or by telephone. The Board may vote to hold an executive session for the purpose of obtaining legal advice from the Board's attorney on any matter listed on the agenda pursuant to A.R.S. § 38-431.03 (A)(3)&(4).

The agenda for the meeting is as follows:

1. **Call to Order** (Mayor John Giles, Chair)
   Members of the Phoenix-Mesa Gateway Airport Authority will attend either in person or via videoconference.

2. **Roll Call** (Mayor John Giles, Chair)

3. **Pledge of Allegiance**

4. **Call to the Public**
   Members of the Board may not discuss items that are not on the agenda. Therefore, action taken as a result of public comment will be limited to directing staff to study the matter or scheduling the matter for further consideration and decision at a later date. Maximum of three minutes per speaker.

5. **Executive Director's Report** - J. Brian O'Neill, A.A.E., Executive Director/CEO

6. **GatewayEast Infrastructure IGA Presentation** – Shea Joachim, Business Development Director

7. **Consent Agenda**

   a) **Minutes** of the Board Meeting held on July 20, 2021.

   b) **Resolution No. 21-33 –** Authorizing the Executive Director to execute an **Intergovernmental Agreement with the City of Mesa** for various infrastructure projects.

   c) **Resolution No. 21-34 –** Approving an Authorization of Services with **Kimley-Horn & Associates** for Engineering Design Services for the Design of TWY C New Connectors and Partial Parallel Taxiways in an amount not-to-exceed $250,483 under CIP 1236.

   d) **Resolution No. 21-35 –** Authorizing a facility lease with **Trident Military Systems, LLC** for the facility located at 6145 South Kent Street, Mesa AZ 85212. The lease term is two (2) years, commencing on October 1, 2021 with three (3) additional renewal periods of one (1) year each.

   e) **Resolution No. 21-36 –** Authorizing the Executive Director to execute an Air Carrier Operating Agreement with **Flair Airlines Ltd**. For commercial air service at the Airport.

   f) **Resolution No. 21-37 –** Authorizing the Executive Director to execute an Air Carrier Operating Agreement with **Sun Country, Inc**. for commercial air service at the Airport.

g) **Resolution No. 21-38 –** Adoption of the revised **Airport Rates and Charges** schedule with an effective date of October 1, 2021.

h) **Resolution No. 21-39 –** Authorizing a Facility Lease Agreement with the **Transportation Security Administration** for a portion of the facilities located at 6033-2, 6033-5, and 5803 S. Sossaman Road. The lease term is three (3) years, commencing October 1, 2021, with two (2) additional one-year renewal options.

Consideration and Possible Approval of:

8. **Resolution No. 21-40 –** Authorizing a contract with **McCarthy Building Companies, Inc. (McCarthy**) for Terminal Modernization Construction Manager at Risk (CMAR) Pre-Construction Services, in an amount not to exceed $249,610 under CIP 1201.

9. **Resolution No. 21-41 –** Authorizing a contract with **SWCA** for Archaeology Data Recovery Mitigation of the Locus 2 Archaeological Site on the Eastside of the Airport, in an amount not to exceed $142,506 under CIP 1234.

10. **Board Member Comments/Announcements**

11. **Next Meeting: Tuesday, October 19, 2021 at 9:00 a.m.**

12. **Adjournment**

Persons with a disability may request a reasonable accommodation, such as a sign language interpreter, by contacting Misty Johnson at 480-988-7607 or mrjohnson@gatewayairport.com. Requests should be made as early as possible to allow time to arrange the accommodation.

Phoenix-Mesa Gateway Airport

- Record-setting commercial passenger activity
- Important airport facility and infrastructure projects
- New aeronautical and non-aeronautical private development

Executive Director's Report

September 2021

Financial Snapshot

OPERATING INCOME	July		Month Variance	FYTD Comparison		FYTD Variance
	FY21	FY22		FY21	FY22	
Revenues	$1,819,818	$2,243,435	$423,617	$1,819,818	$2,243,435	$423,617
Less Expenses	$1,503,042	$1,812,671	$309,629	$1,503,042	$1,812,671	$309,629
Operating Income *(before depreciation)*	**$316,776**	**$430,764**	**$113,988**	**$316,776**	**$430,764**	**$113,988**

Investment Fund Balances: As of July, Local Governmental Investment Pool (LGIP) 700 = $19,077,745; Wells Fargo; Collateralized Money Market = $434,000 and Collateralized CD's = $35,285,522; Total $54,797,267. The month-over-month increase is attributable to investment earnings of $39,777.

Finance and Accounting

July 2021 net operating results were $430,764. This is significantly above the historic average for the month of July and continues to be impressive financial performance during a global pandemic. Of more significance, these results were achieved without the operations or the revenues associated with U.S. Forest Service (USFS) flights. Due to heavy monsoon rains, the USFS did not conduct firefighting flights during the month of July. Aeronautical revenues continue to improve and were 11% over July 2020. Non-aeronautic revenues, reflective of record-setting passenger activity, improved by 53%.

Phoenix-Mesa Gateway Airport Authority (PMGAA, Authority) is closely monitoring operational expenditures, non-essential construction projects, and employee overtime.

Through the end of July, PMGAA has submitted a total of $3,177,129 for CRRSAA Act operating grant reimbursements, which are not reflected in the operating results.

PMGAA Solicitations

Active/Pending Solicitations

TYPE OF SOLICITATION	Number	Title	Anticipated Contract Award
Request for Qualifications	2022-002-RFQ	CMAR Terminal Modernization - Pre-Construction Services	September 2021
Request for Proposals	2022-007-RFP	Fuel Stands	October 2021
Request for Proposals	2022-003-RFP	Parking Access Revenue Control System	November 2021
Request for Qualifications	2022-006-RFQ	Rental Car Care Facility Design Services	November 2021
Request for Proposals	2022-001-RFP	Master Developer for Gateway***East***	November 2021

Future Solicitations

TYPE OF SOLICITATION	Number	Title	Scheduled for Release
Invitation for Bid	2022-004-IFB	Taxiway W Rehabilitation	September 2021
Request for Qualifications	2022-005-RFQ	Fabrication & Installation of Signs	September 2021
Request for Proposals	2022-011-RFP	Pre-Conditioned Air Units	September 2021

Airport Operations

Flair Airlines Announces New Nonstop Service to Edmonton. Now Providing Flights to Four Canadian Destinations

Flair Airlines, an ultra-low-cost Canadian air carrier recently announced nonstop service to Vancouver, Calgary, and Toronto beginning this fall. Now, Flair is adding Edmonton to their list of popular Canadian destinations it will serve from Phoenix-Mesa Gateway Airport (Airport, Gateway Airport).

Allegiant Launches New Nonstop Pittsburgh Service

Inaugural PIT Passengers Enjoying Pre-Flight Treats

On Thursday, August 19, 2021, Allegiant Air began service from Gateway Airport to Pittsburgh International Airport. More than one hundred people took advantage of Allegiant's low fares to take the inaugural flight to this popular east coast destination.

During the past year, Allegiant has added a significant number of new nonstop destinations from Gateway Airport, and now offers service to fifty-five U.S. cities and towns.

Operations Statistics

PASSENGER COUNTS		July		% Change	FYTD		% Change
		FY21	FY22		FY21	FY22	
Passengers	**TOTAL**	**92,874**	**161,068**	**73%**	**92,874**	**161,068**	**73%**
	Deplaned	46,842	82,406	76%	46,842	82,406	76%
	Enplaned	46,032	78,662	71%	46,032	78,662	71%
Allegiant	Scheduled	92,874	157,149	69%	92,874	157,149	69%
WestJet	Scheduled	0	0	0%	0	0	0%
Swoop	Scheduled	0	0	0%	0	0	0%
Avelo	Scheduled	0	3,833	100%	0	3,833	100%
Elite/Swift	Charter	0	86	100%	0	86	100%

OPERATIONS	July		% Change	FYTD		% Change
	FY21	FY22		FY21	FY22	
Air Carrier	975	1,199	23%	975	1,199	23%
Military	169	383	127%	169	383	127%
General Aviation	16,670	16,071	-4%	16,670	16,071	-4%
TOTAL	**17,814**	**17,653**	**-1%**	**17,814**	**17,653**	**-1%**

PMGAA Team Member Spotlight

Employee Name: **Brian Sexton**

Employee Title: **Community Relations Manager**

PMGAA Department: **Communications and Government Relations**

Years with PMGAA: **25**

What are your job responsibilities for PMGAA? I work to sustain a positive public perception of the Airport though outreach, including partnering with area Chambers of Commerce, facilitating airport tours, public presentations, special events, and responding to community noise concerns.

What is your most memorable Gateway Airport moment? My favorite moment came during an airshow in 2000 when I was asked to join the pyrotechnic team for the Tora! Tora! Tora! Pearl Harbor reenactment. WWII aircraft flew 25 feet over our head and simulated dropping bombs. My job was to denotate the explosions. To feel the heat from the blast and the concussion, combined with the thrill of seeing the pilot smiling at me as he dove just feet from my head, was incredible!

What is something people may not know about you? Our ten-year-old son has been passionate about 'all things garbage and recycling' since he was able to walk. So, we created a YouTube channel for kids to celebrate his passion. Over the years, the channel has led to friendships around the world. We had no idea following the garbage truck would be so much fun!

Gateway Aviation Services

During the month of July 2021, Gateway Aviation Services (GAS), the PMGAA-operated FBO, pumped more than 1.65 million gallons of aviation fuel, a 7% increase over last July.

FUEL (Gallons)	July			FYTD		
	FY21	FY22	% Change	FY20	FY21	% Change
AvGas	47,008	31,269	-33%	47,008	31,269	-33%
Retail Jet A	34,085	42,924	26%	34,085	42,924	26%
Contract	373,234	300,257	-20%	373,234	300,257	-20%
Commercial	1,094,657	1,278,245	17%	1,094,657	1,278,245	17%
TOTAL	1,548,984	1,652,695	7%	1,548,984	1,652,695	7%

Engineering and Planning

Gateway Airport Designing Five-Gate Terminal Addition

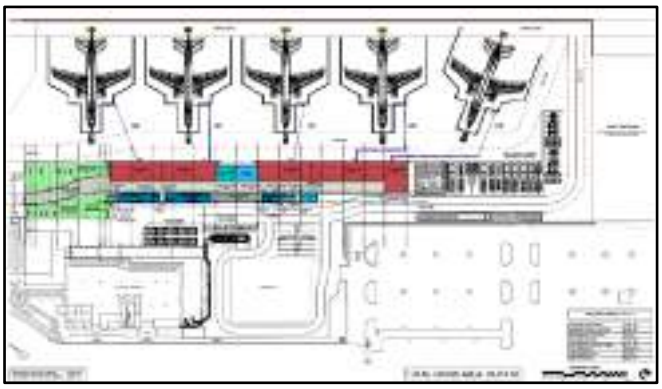

Conceptual Design for 5-Gate Terminal Addition

What do you get when you add record-setting passenger activity, five airlines operating at Gateway Airport this fall, and a strong desire to remain that ***Just Plane Easy*** airport? The need for a new, five-gate terminal addition!

Elements of this 30,000 sq. ft. terminal addition include five full-sized Category III aircraft gates (replacing the four-gate terminal annex), two landscaped courtyards offering outdoor seating, a new retail/food/beverage concession, much-needed storage space, and airside airline offices. This is the last capacity enhancement opportunity for the west side terminal. Any future growth after this construction project will need to occur in a new, demand-driven commercial passenger terminal located on the east side of the airfield.

Construction on Alpha Apron Phase III Scheduled to Begin by End of September

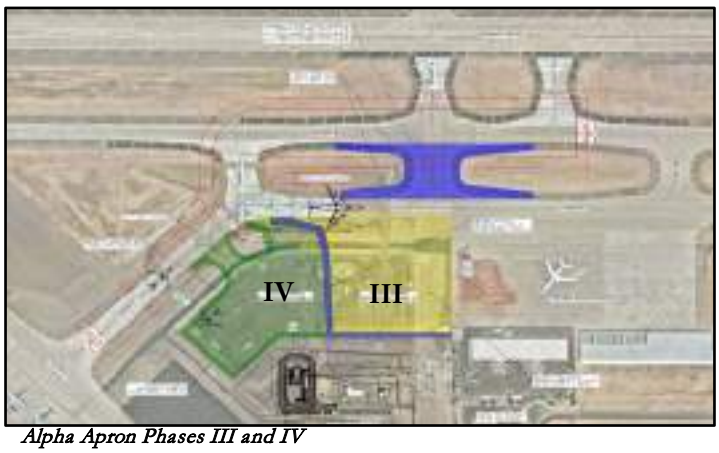

Alpha Apron Phases III and IV

Although Gateway Airport has 3,000 acres and miles of runways and taxiways, available ramp space to park larger, heavier aircraft is often at a premium on the airfield. The introduction of additional firefighting apparatus used by the U.S. Forest Service, increased military training operations, and expanding air cargo activities have created aircraft parking challenges for PMGAA. To ensure adequate capacity for future aircraft parking, PMGAA is constructing Phase III, and designing Phase IV, of the Alpha Apron Expansion Project located at the south end of the airfield adjacent to Gateway Airport's new air traffic control tower. When completed, these two projects will add 54,000 sq. yd. of new aircraft parking apron for large aircraft to use.

Rental Car Facility and Infrastructure Improvements Moving Forward

Two projects are currently underway to improve rental car company facilities and infrastructure at Gateway Airport. One project will enhance capacity and improve efficiency of the Rental Car Return Lot and the other will redesign and expand the Rental Car Care Facility where returned vehicles are serviced, cleaned, and prepped before being placed back into available rental inventory.

Community Noise Report

During the month of July 2021, PMGAA received aircraft noise calls from a total of 16 area residents, compared to six callers during July last year.

CALLERS	July		FYTD	
	FY21	FY22	FY21	FY22
Total	6	16	6	16

AIRCRAFT TYPE	June		FYTD	
	FY21	FY22	FY21	FY22
	Callers	Callers	Callers	Callers
Commercial	3	12	3	12
GA Total	2	2	2	2
Helicopter	0	0	0	0
Military	1	2	1	2
Total	6	16	6	16

LOCATION	June		FYTD	
	FY21	FY22	FY21	FY22
Mesa	1	4	1	4
Gilbert	2	8	2	8
Gold Canyon	1	0	1	0
Queen Creek	2	2	2	2
Queen Valley	0	1	0	1
San Tan Valley	0	0	0	0
Apache Junction	0	1	0	1
Chandler	0	0	0	0
TOTAL	6	16	6	16

Business Development

400-Acre Gateway*East* Master Development Opportunity Solicitation Nears Completion

Conceptual Rendering of GatewayEast Development

Gateway***East*** is a 400-acre mixed-used non-aeronautical development opportunity strategically located on the east side of Gateway Airport adjacent to the expanding State Route 24, Loop 202 San Tan Freeway, and Ellsworth Road. PMGAA is looking for a highly qualified and experienced land development company with a proven track record of success to serve as Master Developer of the site.

During the first phase of the solicitation process, PMGAA received submittals from 12 qualified companies or teams of companies interested in partnering with the Authority to maximize the development potential of the 400-acre Gateway***East*** site. From that exercise, PMGAA created a short list of four candidates that the Authority felt were the "best fit" for this non-aeronautical land development project. Those companies (or team of companies) were then asked to submit detailed proposals that shared their vision for overall product mix, timing and phasing of development, and their proposed investment.

PMGAA plans to have a master developer for Gateway***East*** selected by the end of 2021.

MINUTES OF PUBLIC MEETING OF THE
PHOENIX-MESA GATEWAY AIRPORT AUTHORITY
BOARD OF DIRECTORS | July 20, 2021

A public meeting of the Phoenix-Mesa Gateway Airport Authority (PMGAA) was convened on Tuesday, July 20, 2021, beginning at 9:00 a.m. in the Board Room (Saguaro A&B) of the Gateway Administration Building, 5835 S Sossaman Road, Mesa, Arizona.

Members Present

Mayor John Giles, Mesa
Councilmember Jim Waring, Phoenix (*via videoconference*)
Mayor Brigette Peterson, Gilbert
Mayor Chip Wilson, Apache Junction
Lt. Governor Monica Antone, Gila River Indian Community (*via videoconference*)
Mayor Gail Barney, Queen Creek (*via videoconference*)

** Neither present nor represented*

Airport Staff Present

J. Brian O'Neill, Executive Director/CEO
Scott Brownlee, Deputy Director/COO
Chuck Odom, CFO
Misty Johnson, Clerk of the Board
Jill Casson Owen, Attorney

1. **Call to Order** at 9:02 a.m. (Mayor Giles)

2. **Roll Call**

3. **Pledge of Allegiance**

4. **Call to the Public**
   There were no public comments.

5. **Executive Director's Report** J. Brian O'Neill, A.A.E., Executive Director/CEO

   Executive Director O'Neill provided a briefing on PMGAA financial performance, passenger activity, the community noise report, and various Airport projects.
   - Fiscal Year-to-Date (FYTD) Net Operating Income is $2,610,368.
   - Commercial passenger activity at Gateway Airport continues to recover from the COVID-19 pandemic. For FYE21, Gateway Airport was down 12% compared to FYE20. June 2021's passenger total of 151,219 commercial passengers was the highest June passenger activity number in the history of the Airport.
   - Flair Airlines is returning to Gateway Airport this fall with seasonal, nonstop routes to Vancouver, Calgary, and Toronto, Canada.
   - Swoop is planning to return to Gateway Airport for the winter season with nonstop service to Edmonton, Winnipeg, and Toronto, Canada beginning in September and continuing through the end of April.
   - WestJet Airlines is planning to return to Gateway Airport for the winter season with nonstop service to Calgary, Canada beginning October 31st and continuing through the end of April.
   - Beginning August 19th, Allegiant Air will begin nonstop service to Pittsburgh, Pennsylvania.

DRAFT

- Sun Country Airlines will be coming to the Airport for the first time beginning in November with flights to Minneapolis.
- Site work and underground utilities are being installed for the Gateway Executive Airpark's 183,000 SF hangar complex. This impressive three-hangar project is comprised of both multi-tenant and single tenant lease opportunities. The first two hangars should be operational in the first quarter of 2022. The larger multi-tenant hangar is scheduled to be completed in late fall of 2022.
- SkyBridge Arizona is diligently working with the City of Mesa to obtain permitting, and variances needed to progress with the design phase for its 127-room Wyndham dual-brand hotel along Sossaman Road.
- SkyBridge Arizona has acknowledged they will bring forward a take-down package for two additional industrial buildings to fulfill the need for large, single tenant flex industrial buildings. These two buildings will be approximately 200,000 SF feet and 240,000 SF respectively.
- In June, PMGAA supplied the U.S. Forest Service with more than 700,000 gallons of aviation fuel while they were actively fighting the Telegraph and Mescal fires east of the Airport. Many of the aircraft stationed here this summer have been relocated to bases in California to fight the fires in the west. PMGAA acknowledges the Herculean efforts of the men and women of the U.S. Forest Service.
- Record fuel sales for the month of June topped 2.3MM gallons and contributed to the Fiscal Year record of more than 20MM gallons of fuel sold in FY2021.
- The Arizona Department of Transportation conducted their latest Economic Impact Study of all the individual airports across the state. The 2012 study shows PMGAA contributed $685,042,000 in total economic benefit to the region. The 2019 study, using the same criteria, shows the economic benefit increasing to $1,761,781,074.
- Gateway***East*** is a 400-acre mixed use non-aeronautical master development opportunity located on the east side of the Airport. The Gateway***East*** Master Developer solicitation continues. The RFQ process had 12 highly qualified submissions. The top four submissions have been invited to participate in an RFP process. The finalists are The Boyer Company, Catellus Development Corporation, Douglas Allred Corporation and Trammel Crow Company & Sunbelt Holdings.
- PMGAA's parking contractor is experiencing significant staffing challenges to the point where performance expectations are not being met. PMGAA Staff has stepped in as shuttle bus drivers to supplement the level of commitment the parking coordinator is able to provide. The Authority is looking to bring in additional parking shuttle contractors to support Airport activities until the end of the busy summer travel season.
- The construction contractor for the new air traffic control tower performed a trial lift of the two-story 225,000-pound steel structure. The structure is scheduled to be placed during the last week of July/first week of August. Once this massive steel structure is securely in place, the crane will then lift the 550SF tower cab into place. The project is scheduled to be completed by summer 2022.
- PMGAA is preparing to expand aircraft parking opportunities at the south end of the airfield. Alpha Apron Phase III will begin construction at the end of this year's fire season. Last month the PMGAA Board approved the Authorization of Services for Phase IV design engineering services.
- PMGAA is constructing a new remain overnight (RON) pad for four aircraft across the ramp from the north end of the commercial passenger terminal. This project will be completed in early fall.
- Terminal Modernization Project Design Services - This new modern structure will be connected to the main terminal with a concourse to expand the commercial passenger capacity of the Airport. It will be a 4-5 gate terminal replacing the temporary terminal annex building that opened in 2007 when Allegiant Air began scheduled service in Arizona.

- PMGAA is constructing a new cell phone lot at the intersection of Ray and Sossaman Roads. Once completed, the current cell phone lot will be repurposed into a new parking lot for terminal tenant employees. This important project will free up revenue spaces currently being used by 150 terminal tenant employees in the Daily Parking Lot.
- PMGAA is embarking on two important projects to improve car rental infrastructure at Gateway Airport. The first undertaking is to update and reconfigure the rental car return lot to improve traffic flow. The second is to improve the car care facility at the south end of the Airport. This facility is where vehicles are maintained, fueled, washed, and vacuumed in preparation for new customers. These projects are funded by Customer Facility Charge (CFC) funds, a dedicated fee assessed to passengers renting cars at the Airport. The CFC amount is $2.50 per rental day. These funds go into a dedicated account and can only be used to improve the infrastructure and facilities for the rental car operation.

6. Consent Agenda

a) Minutes of the Board Meeting held on **June 15, 2021.**

b) Resolution No. 21-26 Authorizing the purchase of janitorial supplies from **Network Services Company** in partnership with **Waxie Sanitary Supply** for FY22, in an amount not to exceed $100,000.

c) Resolution No. 21-27 – Authorizing a contract with **Flagship Airport Services, Inc. (Flagship**) for janitorial services, in an amount not to exceed $2,243,648.69 for three years with two (2) one-year renewal options not to exceed $789,388.37 and $811,096.55 respectively each year.

d) Resolution No. 21-28 – Authorizing the purchase of one backhoe from **Bingham Equipment Company**, in an amount not to exceed $59,421.02.

e) Resolution No. 21-29 – Authorizing additional paving services with **Ace Asphalt of Arizona, Inc**. **(Ace Asphalt)** be added to the previous Board Approved North Remote Aircraft Parking Apron Project under CIP 1229, in an amount not to exceed $53,721.

Mayor Chip Wilson moved to approve the Consent Agenda.
Councilmember Jim Waring seconded the motion.
The motion was carried unanimously.

Consideration and Possible Approval of:

7. Resolution No. 21-30 – Approving a Construction Contract with **Combs Construction Company, Inc. (Combs Construction)** for the construction of the Alpha Apron Expansion Phase III utilizing Passenger Facility Charge (PFC) funds in an amount not to exceed $8,512,421.73 under CIP 719 and approve an additional $2,900,000 increase to the FY22 Capital Budget due to increased construction costs.

Mayor Brigette Peterson moved to approve Resolution No. 21-30.
Mayor Chip Wilson seconded the motion.
The motion was carried unanimously.

8. **Resolution No. 21-31 –** Approving an Authorization of Services for Alpha Apron Expansion Phase III Construction Administration Services with **Kimley-Horn and Associates (KHA)** in an amount not to exceed $247,709.50 under CIP 719.

   Mayor Brigette Peterson moved to approve Resolution No. 21-31.
   Mayor Chip Wilson seconded the motion.
   The motion was carried unanimously.

9. **Resolution No. 21-32 –** Authorizing a contract with **DWL Architects + Planners, Inc. (DWL)** for Terminal Modernization Design Services, in an amount not to exceed $948,243 under CIP 1201, and to approve bringing this Terminal Modernization Design and Construction Project (CIP 1201) forward to be included in the FY22 Capital Budget in the amount of $12,122,000.

   Mayor Chip Wilson moved to approve Resolution No. 21-32.
   Mayor Brigette Peterson seconded the motion.
   The motion was carried unanimously.

10. **Board Member Comments/Announcements.**

    There were no comments or announcements.

11. **Next Meeting: Tuesday, September 21, 2021** at 9:00 a.m. in the Board Room (Saguaro A&B) of the Gateway Administration Building, 5835 S Sossaman Road, Mesa, Arizona. Members of the Phoenix-Mesa Gateway Airport Authority may attend either in person or by telephone/videoconference.

12. **Adjournment.**
    The meeting adjourned at 9:45 a.m.

Dated this _____ day of _____ 2021.

_____
Misty Johnson, Clerk of the Board

Phoenix-Mesa Gateway Airport Authority
5835 S Sossaman Road
Mesa, Arizona 85212-6014
www.gatewayairport.com

Board Action Item

Re: Resolution 21-33

To:	**Board of Directors**
From:	**Shea Joachim, CEcD, Business Development Director**
Through:	**J. Brian O'Neill, A.A.E., Executive Director/CEO**
Subject:	**Intergovernmental Agreement for Infrastructure Projects**
Date:	**September 21, 2021**

Proposed Motion
Authorizing the Executive Director to execute an Intergovernmental Agreement with the City of Mesa for various infrastructure projects.

Narrative
Phoenix-Mesa Gateway Airport Authority ("PMGAA") staff and City of Mesa staff have been collaborating for several years on future infrastructure investments to facilitate the development of the eastside of Phoenix-Mesa Gateway Airport ("Airport"). Significant commercial development demand in the area around the Airport and the extension of State Route 24 ("SR24") are driving development interest in the Airport's eastside. The Airport is in the process of a competitive solicitation for a master developer for approximately 400 acres of non-aeronautical property on the eastside of the Airport. PMGAA staff refer to this development opportunity as Gateway***East***.

The City of Mesa has committed to delivering four critical infrastructure projects to support both Gateway***East*** and other private development in the area. The four projects include a new signalized intersection at Ellsworth Road and the new Williams Field Road alignment ("Intersection"), a new box culvert across the Ellsworth channel with associated utility stubs and 800 linear feet of roadway designed as a 4 + 1 Major Collector extending into PMGAA property ("Culvert & Road"), the extension of a 20-inch waterline along Ellsworth Road from SR24 to Pecos Road ("Water Line"), and an alignment study for a Spine Road which will connect Ellsworth Road to Ray Road ("Spine Road Alignment Study"). PMGAA has committed to administering the design and construction of a sewer line extension from Old Pecos Road to PMGAA property, a lift station (if required), and a private sewer line north within PMGAA property

The Intergovernmental Agreement ("IGA") is necessary to set forth the roles, responsibilities, and schedule expectations with respect to the City of Mesa projects and PMGAA projects, including contracting consultant engineering design services, design review, construction administration, construction permitting and inspection, and ownership of the completed projects.

Fiscal Impact
PMGAA staff estimates the design costs for the PMGAA Project to be $130,000. PMGAA staff does not have a construction estimate at this time but will request funding authorization for construction from the PMGAA Board at a board meeting in the future.

Attachment(s)
Intergovernmental Agreement

RESOLUTION NO. 21-33

WHEREAS, the Phoenix-Mesa Gateway Airport Authority ("Authority"), a joint powers airport authority formed pursuant to Arizona Revised Statute §28-8521 *et seq.* owns and operates the Phoenix-Mesa Gateway Airport ("Airport"); and

WHEREAS the Authority desires to authorize the Executive Director to execute an Intergovernmental Agreement with the City of Mesa for various infrastructure projects.

NOW, THEREFORE, BE IT RESOLVED by the Board of Directors of the Authority as follows:

> **The Board of Directors of the Authority hereby authorizes the Executive Director to execute an Intergovernmental Agreement with the City of Mesa for various infrastructure projects. This resolution also authorizes the Chair or Executive Director/CEO to make such additions, deletions, and changes as may be approved by the Chair or Executive Director/CEO, necessary to carry out the purposes and intent of this Resolution.**

Passed and adopted by the Authority this 21st day of September, 2021.

John Giles, Chair

ATTEST:

Misty Johnson, Clerk of the Board

APPROVED AS TO FORM:

Jill Casson Owen, Attorney

INTERGOVERNMENTAL AGREEMENT

BETWEEN
THE CITY OF MESA
AND
THE PHOENIX-MESA GATEWAY AIRPORT AUTHORITY

THIS INTERGOVERNMENTAL AGREEMENT ("Agreement") is entered into this date _____, 2021 (the "Effective Date") pursuant to the Arizona Revised Statutes ("A.R.S.") §§ 11-951 et seq., between the CITY OF MESA, an Arizona municipal corporation (the "City"), and PHOENIX-MESA GATEWAY AIRPORT AUTHORITY, a joint powers airport authority authorized and existing under the laws of the State of Arizona ("PMGAA"). The City and the PMGAA are collectively referred to as "Parties."

I. RECITALS

1. A.R.S. §§ 11-951 et seq., authorizes the City and PMGAA to enter into intergovernmental agreements for the provision of services, or for joint or cooperative actions.

2. A.R.S. § 48-572 also empowers the City to enter into this Agreement, and it has by resolution (a copy of which is attached and made a part of) resolved to enter into this Agreement and has authorized the undersigned to execute this Agreement on behalf of the City.

3. The City is administering the design and construction of four infrastructure projects, collectively referred to as the "City Projects," which will improve the City's utility service delivery and aid in the future development of the eastside of the Phoenix-Mesa Gateway Airport generally located at the intersection of Ray Road and Sossaman Road, City of Mesa, Maricopa County, Arizona (the "Airport"). The infrastructure projects include a new signalized intersection at Ellsworth Road and the realigned Williams Field Road ("Intersection"), a new box culvert across the Ellsworth channel with associated utility stubs thereby connecting the Intersection to PMGAA property and eight hundred linear feet of roadway designed as a 4 + 1 Major Collector extending west into PMGAA property from the western edge of the Intersection ("Culvert and Road"), the extension of a 20-inch waterline along Ellsworth Road from SR24 to Pecos Road and across the Culvert and Road into PMGAA property ("Water Line"), and an alignment study of the entire Spine Road from Ellsworth Road to Ray Road ("Spine Road Alignment Study"). Exhibit 1 provides additional details about the City Projects.

4. PMGAA is administering the design and construction of a sewer line extension from Old Pecos Road to PMGAA property, a lift station (if required) and a private sewer line north within PMGAA property to facilitate development within the GatewayEast site ("PMGAA Project"). The Parties understand that a portion of the PMGAA Project will be located outside of public Rights-of-Way ("ROW") and PMGAA will own and maintain the portion of the PMGAA Project that is outside of the ROW. Exhibit 1 provides additional details about the PMGAA Project.

5. This Agreement is intended to set forth the roles and responsibilities of the Parties with respect to the City Projects and PMGAA Projects, including contracting consultant engineering design services, design review, construction administration, construction permitting and inspection, and ownership of the completed projects.

6. The Parties recognize and agree that neither Party can guaranty that a contractor will meet the deadlines proposed in this Agreement, particularly in light of recent external influences on labor and supply chain

availability. Nevertheless, each Party agrees that it will utilize all contractual remedies available under its respective construction and design contracts in a prudent manner to encourage contractor compliance with completion deadlines.

THEREFORE, in consideration of the mutual terms expressed in this Agreement, it is agreed as follows:

II. SCOPE

1. Responsibilities of PMGAA:

1.1. PMGAA shall certify the design of the PMGAA Project according to the current City Engineering & Design Standards.

1.2. PMGAA will submit the plans, specifications, and estimates ("PS&E") to the City for review and approval of the PMGAA Project prior to the commencement of any construction.

1.3. PMGAA will provide Easements (in a form acceptable to the City) if required to accommodate the City Projects and the PMGAA Project for the City to access them on PMGAA property.

1.4. PMGAA will coordinate with the City regarding times when construction activities of the PMGAA Project are to be performed so as to allow the City to perform Quality Assurance ("QA") services as needed by the City. PMGAA shall allow the City to inspect all portions of the PMGAA Project located within the ROW.

1.5. PMGAA shall pay all costs associated with the design, applicable permit fees (if any), construction administration, and construction of the PMGAA Project.

1.6. PMGAA will provide to the City, at its request, all pertinent documents related to the PMGAA Project including, but not limited to, legal and exhibit documents of the Easements, final sealed PS&E, record drawings, and construction documentation.

1.7. PMGAA will require PMGAA's contractor to assume responsibility for the operation and maintenance of the PMGAA Project until the City accepts the permitted work and the permit is closed out.

1.8. PMGAA will require PMGAA's contractor to substantially complete the PMGAA Project on or before April 1, 2023.

1.9. PMGAA agrees that ownership of the PMGAA Project within City ROW shall transfer to the City (without any further documentation) upon the City accepting the permitted work pursuant to Section 2.4. Furthermore, such transfer of ownership shall include an assignment to the City of any and all warranties associated with any improvement transferred to City ownership.

1.10. PMGAA acknowledges that utility service provided by the City, including but not limited to

service through the PMGAA Project, is subject to the City's Terms and Conditions for the Sale of Utilities and payment of applicable rates, fees and charges, all as adopted and made effective by the City.

2. **Responsibilities of the City:**

2.1. The City shall certify through the permit process the design of the Intersection, Culvert and Road, Spine Road Alignment Study, and Water Line according to the current City Engineering & Design Standards.

2.2. The City will include PMGAA in the review of the design plans for the City Projects.

2.3. The City shall pay all costs associated with the design, construction administration, and construction of the City Projects.

2.4. The City will perform all permit required inspections and QA services to verify that the construction of the City Projects is in compliance with the approved PS&E.

2.5. The City will require the City's contractor(s) to substantially complete the Intersection by April 1, 2022.

2.6. The City will require the City's contractor(s) to substantially complete the Culvert and Road by April 1, 2023.

2.7. The City will require the City's contractor(s) to substantially complete the Spine Road Alignment Study by February 1, 2022.

2.8. The City will require the City's contractor(s) to substantially complete the Water Line by April 1, 2023.

2.9. The City will assume the ownership (including operation and maintenance), for the completed City Projects and PMGAA Project within the ROW upon the City receiving and accepting them, in writing.

3. **Term:**

3.1. The term of this Agreement shall commence on the Effective Date and shall automatically terminate upon the City's written acceptance of the City Projects and PMGAA Project; provided, however, termination of this Agreement shall not affect the transfer of ownership in subsections 1.9. and 2.9 of this Agreement.

4. **General Provisions:**

4.1. Each Party reserves all rights that it may have to cancel this Agreement under A.R.S. § 38-511.

4.2. The Parties reserve the right to extend the deadlines set forth in Section 1.8, 2.5, 2.6, 2.7, and 2.8 administratively and through written agreement should there be a material change in plans for economic development tied to the PMGAA Project and/or City Project.

4.3. PMGAA warrants compliance with all federal immigration laws and regulations that relate to their employees and compliance with the E-verify requirements under A.R.S. § 23-214(A). PMGAA will require any contractor, and all subcontractors, to provide the same warranty. Failure by PMGAA, PMGAA's contractors, or subcontractors, to comply with such warranty shall be deemed a material breach of this Agreement and may result in the termination of this Agreement.

4.4. This Agreement contains the entire understanding between the Parties with respect to the subjects addressed and supersedes all prior negotiations and agreements.

4.5. This Agreement may be amended only by an instrument in writing signed by authorized representatives of the Parties.

4.6. Each Party shall (as "Indemnitor") indemnify, defend, and hold harmless the other Party, any of its departments, agencies, officers or employees (collectively referred to in this paragraph as "Indemnitee") from any and all claims, demands, suits, actions, proceedings, loss, cost and damages of every kind and description, including reasonable attorneys' fees and/or litigation expenses (collectively referred to in this paragraph as the "Claims"), which may be brought or made against or incurred by the Indemnitee on account of loss of or damage to any property or for injuries to or death of any person, to the extent caused in whole or in part by, arising out of, or contributed to, by reasons of any alleged act, omission, professional error, fault, mistake, or negligence of Indemnitor, its employees, officers, directors, agents, representatives, or contractors, their employees, agents, or representatives in connection with or incident to the performance of this Agreement. Indemnitor's obligations under this paragraph shall not extend to any Claims to the extent caused by the negligence of the Indemnitee. The obligations under this paragraph shall survive the termination of this Agreement.

4.7. The Parties are governmental agencies which rely upon the appropriation of funds by their respective governing bodies to satisfy their obligations. If a party reasonably determines that it does not have funds to meet its obligations under this Agreement, such party shall have the right to terminate this Agreement without penalty on the last day of the fiscal period for which funds were legally available. In the event of such a termination, such terminating party agrees to provide written notice of its intent to terminate 30 days prior to the termination date.

4.8. In accordance with A.R.S. § 11-952 (D), attached and incorporated in this Agreement is the written determination of each Party's legal counsel that the Parties are authorized under the laws of this State to enter into this Agreement and that the Agreement is in proper form

[Signatures on following page]

IN WITNESS WHEREOF, the Parties have executed this Agreement on or as of the day and year first written above

Phoenix-Mesa Gateway Airport Authority, a Joint Powers Airport Authority Authorized by the State of Arizona

By:_____
J. Brian O'Neill, A.A.E.
Executive Director/CEO

Date:_____

Approved as to form by Phoenix-Mesa Gateway Airport Authority Legal Counsel

By:_____
Jill Casson Owen, Esq.

City of Mesa, an Arizona Municipal Corporation

By:_____
Christopher J. Brady
City Manager

Date:_____

Approved as to form by City of Mesa Attorney's Office

By:_____
Name: _____

EXHIBIT 1

COM Projects Scope:

- New signalized intersection at Ellsworth Road and the realigned Williams Field Road
- New box culvert across the Ellsworth channel with associated utility stubs thereby connecting the "Intersection" to PMGAA property and eight hundred linear feet of roadway designed as a 4 + 1 Major Collector extending west into PMGAA property from the western edge of the Intersection
- Extension of a 20-inch waterline along Ellsworth Road from SR24 to Pecos Road and across the Box Culvert and Road into PMGAA property
- An alignment study of the entire Spine Road from Ellsworth Road to Ray Road

PMGAA Project Scope:

- PMGAA is administering the design and construction of a sewer line extension from Old Pecos Road to PMGAA property, a lift station (if required) and a private sewer line north within PMGAA property to facilitate development within the GatewayEast site

Phoenix-Mesa Gateway Airport Authority
5835 S Sossaman Road
Mesa, Arizona 85212-6014
www.gatewayairport.com

Board Action Item

Re: Resolution 21-34

To:	**Board of Directors**
From:	**R. J. Draper, P.E., LEED AP, CM, Engineering & Facilities Director**
Through:	**Scott Brownlee, Deputy Director/COO** **J. Brian O'Neill, A.A.E., Executive Director/CEO**
Subject:	**Design of TWY C New Connectors and Partial Parallel Taxiways – Kimley Horn & Associates – CIP 1236**
Date:	**September 21, 2021**

Proposed Motion

To approve an Authorization of Services with Kimley-Horn & Associates for Engineering Design Services for the Design of TWY C New Connectors and Partial Parallel Taxiways in an amount not to exceed $250,483 under CIP 1236.

Narrative

Over the last couple of years, interest in private development at Phoenix-Mesa Gateway Airport has gained momentum and there are currently plans being evaluated for the southern portion of the east side by a prominent aerospace developer. With this new development plan, PMGAA staff has determined the need for additional taxiway infrastructure to be designed that will allow aircraft to access the proposed hangar/apron development.

This project will consist of the design of a new partial parallel taxiway adjacent to the existing Taxiway C with two (2) new taxiway connectors (on the west side of the proposed partial parallel) between the proposed parallel taxiway and existing Taxiway C, and two (2) additional taxiway connectors (on the east side of the proposed partial parallel) that will connect the proposed parallel taxiway to the future proposed hangar/apron development. Similar to existing Taxiway C, this design will include a Portland cement concrete pavement section, asphalt paved shoulders in select areas, taxiway lighting and signage, pavement markings, utility improvements, grading and drainage improvements.

In 2019, a Request for Qualifications, 2020-007-RFQ for On-Call Engineering Services was issued. Kimley-Horn and Associates (KHA) was one of two firms selected as the most qualified. In accordance with the terms of our agreement, C-2020007-A, KHA worked with Airport staff to refine a Scope of Work for Engineering Design Services for the TWY C New Connectors and Partial Parallel Taxiways Design. The cost for these services was negotiated based upon the contract fee schedule at a cost not-to-exceed $250,483.

Fiscal Impact

These Engineering Design Services will be funded by PMGAA FY22 Capital Contingency Non-Grant funds under Project 500AIR1236.

Attachment(s): Authorization of Services, Proposal

RESOLUTION NO. 21-34

WHEREAS, the Phoenix-Mesa Gateway Airport Authority ("Authority"), a joint powers airport authority formed pursuant to Arizona Revised Statute §28-8521 *et seq.* owns and operates the Phoenix-Mesa Gateway Airport ("Airport"); and

WHEREAS the Authority desires to approve an Authorization of Services with Kimley-Horn & Associates for Engineering Design Services for the Design of TWY C New Connectors and Partial Parallel Taxiways in an amount not to exceed $250,483 under CIP 1236.

NOW, THEREFORE, BE IT RESOLVED by the Board of Directors of the Authority as follows:

> **The Board of Directors of the Authority hereby approves an Authorization of Services with Kimley-Horn & Associates for Engineering Design Services for the Design of TWY C New Connectors and Partial Parallel Taxiways in an amount not to exceed $250,483 under CIP 1236. This resolution also authorizes the Chair or Executive Director/CEO to make such additions, deletions, and changes as may be approved by the Chair or Executive Director/CEO, necessary to carry out the purposes and intent of this Resolution.**

Passed and adopted by the Authority this 21st day of September, 2021.

_____
John Giles, Chair

ATTEST:

_____
Misty Johnson, Clerk of the Board

APPROVED AS TO FORM:

_____
Jill Casson Owen, Attorney

AUTHORIZATION OF SERVICES
Kimley-Horn & Associates, AOS 20A-2201

The signing of this Authorization (Agreement) by Phoenix-Mesa Gateway Airport Authority (PMGAA) and Kimley-Horn & Associates, 7740 N. 16th Street, Suite 300, Phoenix, AZ 85020 ("Kimley-Horn"), authorizes Kimley-Horn to carry-out and complete the services described below in consideration of the mutual covenants set forth below:

1. **PROJECT**: Design of TWY C New Connectors and Partial Parallel Taxiways under CIP 1236.

2. **SCOPE OF WORK**: Perform and provide Engineering Design Services for the a new partial parallel taxiway adjacent to the existing Taxiway C with connectors to the west and east side of the proposed partial parallel. All services are to be performed in accordance with PMGAA Agreement C-2020-007-A, including the Standard Terms, and the attached detailed scope of work. Services shall be coordinated with and approved by PMGAA Authorized Representative prior to start of work.

3. **FEE FOR SERVICES**: The fee for services shall be based upon the attached scope of work, not to exceed Two hundred fifty thousand, four hundred eighty-three dollars and zero cents ($250,483), of PMGAA non-grant funds without the express written approval of PMGAA.

4. **AVAILABILITY OF PROJECT FUNDING:** The approval and continuation of this contract is subject to the availability of funds provided to, made available to, or appropriated by PMGAA for this purpose. In the event that funds are not available or appropriated for PMGAA's payment requirements under this contract for the goods and/or services to be provided hereunder, PMGAA may terminate this contract by providing notice to the consultant of the lack of the availability of funds. The consultant acknowledges and agrees that one source of funding for this contract may be funds made available from the Federal Aviation Administration and/or Arizona Department of Transportation, and that this contract, its approval and continuation, may contingent on the availability of those funds being made to PMGAA.

5. **INCORPORATED:** The following documents are hereby incorporated with this Authorization of Services and made part thereof:

   ☑ PMGAA Agreement C-2020007-A dated December 17, 2019.

6. **ATTACHED:** The following documents are attached to this Agreement and are incorporated herein by this reference made part thereof:

☑ Scope and Fee Proposal dated August 20201.

PMGAA and Kimley-Horn acknowledge that they are in agreement with the terms and conditions as set forth in this Authorization.

APPROVED FOR PMGAA:

By:_____

Print: J. Brian O'Neill, A.A.E.

Title: Executive Director/CEO

Date:_____

ACCEPTED FOR Kimley-Horn & Associates:

By: Steve Reeder

Print: Steve Reeder, P.E.

Title: Senior PM/ Vice President

Date: 09/02/2021

OPTION #1 EXHIBIT A

SCOPE OF WORK
ENGINEERING DESIGN SERVICES
for
New Connectors and Partial Parallel Taxiways - Design

A. PROJECT BACKGROUND AND HISTORY:

Over the last couple of years, interest in developing the northeast corner of the Phoenix-Mesa Gateway Airport (the Airport) has gained momentum, and plans for developing this portion of the Airport have been set in motion. With the recent decision to allow the development of a proposed private hangar/apron area on a portion of the currently undeveloped northeast corner, the Airport has determined a need for additional taxiway infrastructure to be designed and constructed that will allow aircraft to access the proposed hangar/apron development.

B. PROJECT DESCRIPTION:

This project will consist of the construction of a new partial parallel taxiway adjacent to the existing Taxiway C with two (2) new taxiway connectors (on the west side of the proposed partial parallel) between the proposed parallel taxiway and existing Taxiway C, and two (2) additional taxiway connectors (on the east side of the proposed partial parallel) that will connect the proposed parallel taxiway to the future proposed hangar/apron development. Similar to existing Taxiway C, this project will include a Portland cement concrete pavement section, asphalt paved shoulders in select areas, taxiway lighting and signage, pavement markings, utility improvements, grading and drainage improvements, and is anticipated to be constructed in phases. The preliminary/schematic geometry of the proposed "*New Connectors and Partial Parallel Taxiways*" project is shown in the Figure **below**.

Design services will be comprised of the preparation of an Engineer's Design Report, preparation of preliminary/final-review/issued-for-bid contract bid documents, and bid phase services. The project is anticipated to be bid in February 2022. Construction Administration services may be added to this project at a later date.

Preliminary Project Layout

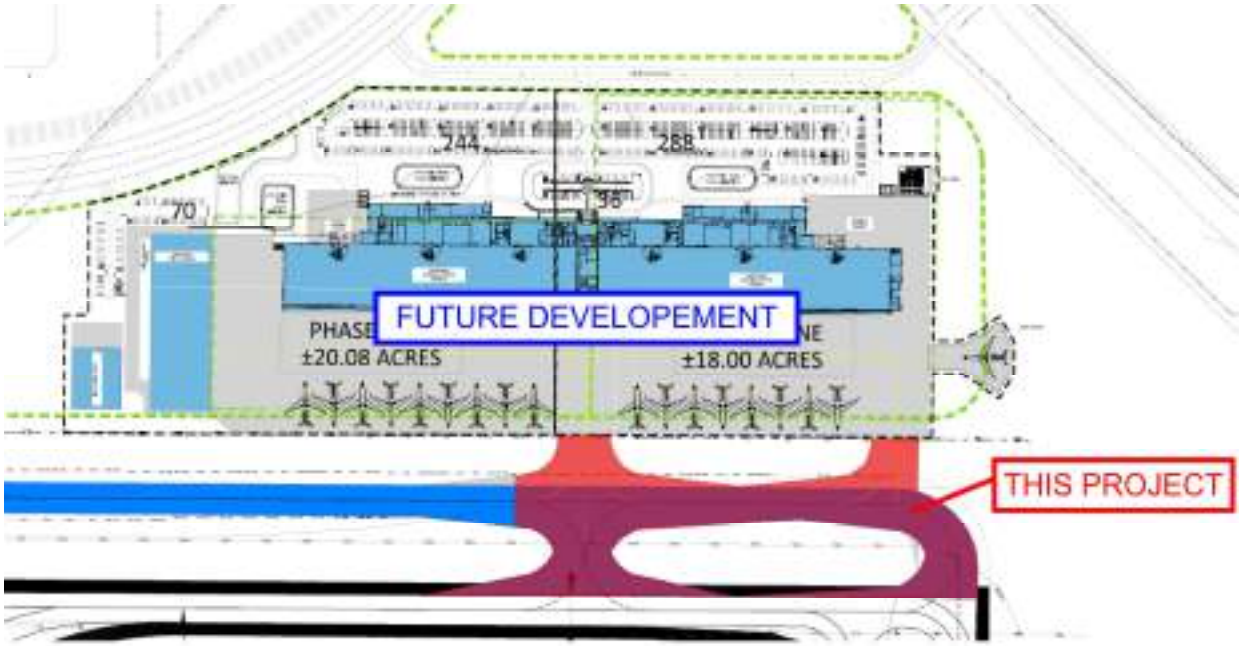

C. PROJECT SCOPE:

The specific scope of work for this Authorization of Service is identified as follows:

1. **PROJECT ADMINISTRATION:** The following general tasks are anticipated to be needed for the project.
   a) Provide project administrative tasks for support throughout the project.
   b) Provide project planning, budgeting, and initial project schedule.
   c) Provide bi-weekly progress reports, meetings and notes of project meetings.
   d) Attend (up to two) coordination and plan review meetings.

2. **PRELIMINARY SUBMITTAL (60%):** Kimley-Horn (the Engineer) will produce a draft Engineer's Design Report and Preliminary Plans (60%) of the project. The Engineer's Design Report will include a description of design methodology and other design concepts, criteria and standards used. Reference will be made to appropriate FAA design circulars, specifications and applicable federal and state regulations. Design standards will be according to FAA Advisory Circular 150/5300-13A (Change 1) "Airport Design", other applicable circulars, and Maricopa Association of Governments (MAG) standards. A draft Construction Safety Plan and appropriate air study submittals will be made as required by the FAA for typical construction projects.

   Information created and determined during this effort will be used to prepare the construction plans and specifications. Information from the E-ALP/GIS project will be used as a base and to augment the survey and utility files for use on the project. As part of this task, topographic survey, utility designation and geotechnical work will be completed.

   These efforts will be done so that preliminary plans (60%) can be prepared. A limited number of preliminary plan sheets (project layout, preliminary typical section, geometrics layout and preliminary electrical layout), an outline of intended specifications, and preliminary cost estimate will be provided to display the project elements. A facilitated review meeting will be held with PMGAA, and with the FAA and Arizona Department of Transportation (ADOT) if required, after the Preliminary submittal and comments will be incorporated into the next submittal.

3. **FINAL REVIEW SUBMITTAL (95%):** The Engineer will provide design and contract construction documents for the taxiway improvements. The Engineer will provide engineering drawings and specifications to be used as contract documents. Plan sheets will include: cover sheet, sheet index, summary of quantities, general notes and abbreviations, project layout, construction phasing, demolition, typical section/details, geometric layout, plan and profiles, pavement elevations, grading & drainage, storm drain profiles/details, joint layout/details, pavement markings plan/details, stormwater pollution prevention plan, electrical, and details will be prepared for the project. The Engineer will assemble owner provided front end documents, a project quantity based bid proposal, FAA general provisions, special provisions (unique project requirements), and technical specifications to be used as project contract documents for the bidding process. The Engineer's Design Report will include a description of design methodology and other design concepts, criteria and standards used. Reference will be made to appropriate FAA design circulars, specifications and applicable federal and state regulations. Design standards will be according to FAA Advisory Circular 150/5300-13A (Change 1) "Airport Design", other applicable circulars, and Maricopa Association of Governments (MAG) standards. A draft Construction Safety Plan and appropriate air study submittals will be made as required by the FAA for typical construction projects.

   Information from the E-ALP/GIS project will be used as a base and to augment the survey and utility files for use on the project.

   Plans, specifications, engineer's design report and construction safety/phasing plan will be prepared for Final Review submittal. A facilitated review meeting will be held with PMGAA, and with the FAA and

ADOT if required, after the Final Review submittal and comments will be incorporated into the next submittal.

4. **ISSUED FOR BID SUBMITTAL (IFB):** The Engineer will provide Issued For Bid Plans, Specifications, Cost Estimate, and Construction Documents for the New Connectors and Partial Parallel Taxiways project.

   Construction Costs: An Engineer's Opinion of Probable Construction Costs will be provided for the project and will be based on cost history for past work within the vicinity of the airfield and for projects of a similar nature. The opinion of probable cost will reflect construction during a regular construction schedule.

5. **PRE-BID ASSISTANCE SERVICES:** The Engineer will provide bidding assistance, issue contract documents to reprographics company for distribution, attend pre-bid conference, answer contractor questions, prepare addendum, tabulate bids, prepare bid summary spreadsheet, and submit to PMGAA written recommendation of award.

D. DELIVERABLES: The following deliverables will be provided according to this contract:

(1) Preliminary Plans and Specifications (Preliminary Submittal) four (4) copies to PMGAA (and one (1) copy to the FAA and ADOT review if required).
(2) Engineer's Design Report – four copies to PMGAA.
(3) Final Review Plans and Specifications (Final Review Submittal) four (4) copies to PMGAA (and one (1) copy to the FAA and ADOT review if required).
(4) Construction Safety Plan/Phasing Plan – copy with each submittal.
(5) Opinion of probable construction costs – copy with each submittal.
(6) Issued For Bid Plans and Specifications (IFB Submittal) four (4) copies to PMGAA. The Airport will provide copies of the plans to contractors for bidding purposes.
(7) Electronic drawing files to PMGAA.

E. OWNER'S RESPONSIBILITIES: PMGAA will furnish specification front end documents including, DBE, legal, bonding and other provisions as required for the contract documents. The Engineer will assemble this information into the contract documents for the bidding process. The information will be due from PMGAA at time of service authorization. PMGAA will review the plan submittals in a timely fashion and provide written comments of the desired changes to the contract documents. PMGAA will provide all archeological and environmental clearances for the project.

F. WORK SCHEDULE: Work is to be completed within five (5) months from the authorization of service date. Draft Schedule as attached.

G. CONSULTANT'S COMPENSATION FOR SERVICES: Kimley-Horn shall be compensated for services using a labor fee plus expense basis with the maximum not to exceed fee shown below. Kimley-Horn will not exceed the total maximum fee shown without authorization from the Client. Individual task amounts are provided for budgeting purposes only. Kimley-Horn reserves the right to reallocate amounts among tasks as necessary.

Design Services - $250,482.22

The derivation of engineering fee for design services are attached to this authorization as Exhibits.

New Connectors and Parallel Taxiway
Phoenix-Mesa Gateway Airport
Phoenix-Mesa Gateway Airport Authority

DATE: August 2021

OPTION #1

EXHIBIT I - DESIGN DOCUMENTS - ENGINEERING FEE
New Connectors and Parallel Taxiway

DERIVATION OF COST OF PROPOSAL FEE

1. DIRECT LABOR

TASK	DESCRIPTION	MANHOURS	TOTAL	EXTENDED TOTAL
001	**Project Administration**	80	4,135.00	
002	**Preliminary Submittal (60%)**			
	Construction Drawings	730	32,981.40	
	Quantities & Cost Estimate	30	1,468.00	
	Engineering Design Report	110	4,952.70	
	Project Specifications	130	6,692.90	
003	**Final Review Submittal (95%)**			
	Construction Drawings	275	13,003.85	
	Quantities & Cost Estimate	18	876.90	
	Engineering Design Report	45	2,136.80	
	Project Specifications	60	3,207.00	
004	**Issued For Bid Submittal (IFB)**	100	4,973.90	
005	**Bid Phase Services**	20	1,146.40	
TOTAL DIRECT LABOR		1,598		$75,574.85

2. EXPENSES:

EXPENSE (Printing/Travel)		2,860.00	
TOTAL EXPENSES:			$2,860.00

3. CONSULTANTS:

TRACE ENGINEERING - SURVEY - ESTIMATED		3,500.00	
WESTERN TECHNOLOGIES INC - GEOTECHNICAL INVESTIGATION		0.00	
TOTAL CONSULTANTS			$3,500.00

4. ENGINEERING FEE

TOTAL LABOR		75,574.85	
OVERHEAD (%)	193.59%	146,305.35	
FEE (% OF NET)	10%	22,188.02	
CONSULTANTS		3,500.00	
EXPENSES		2,860.00	
TOTAL ENGINEERING FEE			**$250,428.22**

New Connectors and Parallel Taxiway
Phoenix-Mesa Gateway Airport
Phoenix-Mesa Gateway Airport Authority

Kimley»Horn

DATE: August 2021

OPTION #1

EXHIBIT II - DESIGN DOCUMENTS - ENGINEERING FEE
New Connectors and Parallel Taxiway

DERIVATION OF COST OF PROPOSAL FEE

1. Direct Salary Costs

Title	HOURS	Rate	Total Labor	EXTENDED TOTAL
Senior Project Manager (Steve Reeder)	149	68.60	10,221.40	
Principal Engineer (Mike Norby)	2	81.50	163.00	
Electrical/Comm Engineer (Dustin Colwell)	183	59.20	10,833.60	
Professional Engineer (Jarrett Moore/Brandon Robinson/Zach Schmidt)	600	49.80	29,880.00	
Analyst (Hasan Kanaan/Robert Walker/Bradley Dawson)	477	37.15	17,720.55	
Senior Analyst/Designer (Dave Hodgson)	88	43.20	3,801.60	
Graphic Designer (Pat Crawford)	67	31.30	2,097.10	
Finance/Project Accountant (Andrew Hacker)	8	37.60	300.80	
Admin/Clerical (Jessica Jensen)	24	23.20	556.80	
Total Direct Salary Costs	1,598			**$75,574.85**

2. Labor and General & Administrative Overhead

Percentage of Direct Salary Costs By 193.59% **$146,305.35**

3. Subtotal of Items 1 and 2 **$221,880.20**

4. Fixed Payment

10% of Item No. 3: **$22,188.02**

5. Non-Salary Expenses

EXPENSE (Printing/Travel)	2,860.00	
Total Direct Non-Salary Expenses		**$2,860.00**

6. Subcontract Costs

TRACE ENGINEERING - SURVEY - ESTIMATED	3,500.00	
WESTERN TECHNOLOGIES INC - GEOTECHNICAL INVESTIGATION	0.00	
Subtotal of subcontract Costs		**$3,500.00**

7. TOTAL ENGINEERING FEE **$250,428.22**

New Connectors and Parallel Taxiway
Phoenix-Mesa Gateway Airport
Phoenix-Mesa Gateway Airport Authority

DATE: August 2021

OPTION #1
New Connectors and Parallel Taxiway

Kimley»Horn

			Senior Project Mgr.	Principal Engineer	Electrical/ Comm. Engineer	Prof. Engineer	Analyst	Senior Analyst Designer	Graphic Designer	Finance/ Project Accountant	Admin/ Clerical	TOTAL MAN-HRS	TOTAL LABOR COST
001		**Project Administration**											
	1	Project Administration-Client Coordination, Subconsultant Coordination, Supervision	4	2		8					4	18	$929
	2	Project Planning, Budgeting, and Initial Project Schedule, Billing	4			8				8		20	974
	3	Progress Reports, Bi-Weekly Meetings, Note preparation and Schedule Updates	6			14					4	24	1,202
	4	Company Quality Control Review											
		- Review Meeting after Preliminary (60%) Submittal	4		2	2					1	9	$516
		- Review Meeting after Final Review (95%) Submittals	4		2	2					1	9	$516
		Subtotal Task 001	22	2	4	34				8	10	80	$4,135
002		**Preliminary Submittal (60%)**											
		Construction Drawings	Sheets										
	1	Cover Sheet, Project Title Sheet	1			2	6		6			14	$510
	2	Index, Legend, Quantities, General Notes	2			4	4		8			16	$598
	3	Project Layout and Horz/Vert Control	2			6	12		6			24	$932
	5	Storm Water Pollution Prevention Plan and Details	2	1		12	8		8			29	$1,214
	6	Project Site and Access Plan	1	1		2	6		2			11	$454
	7	Demolition Plans	2	1		4	8		2			15	$628
	8	Construction Phasing Plans	3	1		24	4		4			33	$1,538
	9	Typical Sections and Details	3	1		12	24					37	$1,558
	10	Geometric Layout Plans	2	2		18	12	6				38	$1,739
	11	Grading and Drainage Plans	2	2		60	12	18				92	$4,349
	12	Storm Drain Profile and Detail Plans	4	1		24	12	24				61	$2,746
	13	Paving Plans	2	1		4	8					13	$565
	14	Taxiway Plan and Profiles	5	1		24	4	18				47	$2,190
	15	Pavement Joint Layout Plans	2	1		12	18					31	$1,335
	16	Pavement Joint Details	1			6	4		2			12	$510
	17	Pavement Marking Plans	2	1		6	18		2			27	$1,099
	18	Pavement Marking Details	1			4	12		2			18	$708
	21	Electrical Symbols, Data Table - Diagram	1		8		8					16	$771
	22	Electrical Lighting Layout/Circuiting	2	2	40		48		8			98	$4,539
	23	Electrical Details	5		12		20					32	$1,453
	24	Circuit Maps	2		24		24					48	$2,312
	25	Technical Supervision and Review		18								18	$1,235
		Subtotal	47	34	84	224	272	66	50			730	$32,981
		Quantities & Cost Estimate											
	1	Calculate Quantities				8	4					12	$547
	2	Cost Estimate											
		- Update Final Review (60%) Cost Estimates			4	8	4					16	$784
	3	Technical Supervision and Review		2								2	$137
		Subtotal		2	4	16	8					30	$1,468
		Engineering Design Report											
	1	Engineer's Report (60%)											
		- Document with summary and recommendations for civil project layout, pavement design electrical layout, sign plan and voltage calculations, drainage design, exhibits and hydraulic calculations		1	6	36	12		3			58	$2,756
	2	Construction Safety Phasing Plan Report (60%)		2		6	40					48	$1,922
	3	Technical Supervision and Review		4								4	$274
		Subtotal		7	6	42	52		3			110	$4,953
		Project Specifications											
	1	Project Specification-General											
		- Create Cover and Table of Contents				2	2					4	$174
		- Prepare Boiler Plate including FAA Compliance				14	4					18	$846
		- Prepare Bid Tab and Agreement											
		- Add Geo-Technical Report & FAA Circulars											
	2	Specification - Special Provisions		4		24					4	32	$1,562
		- Prepare Special Conditions for Project											
	3	Technical Specification											
		- Prepare Technical specifications-		4		40					4	48	$2,359
		Earthwork, Subgrade, Pavement, Marking,											
		Electrical		2	18							20	$1,203
	4	Technical Supervision and Review		8								8	$549
		Subtotal		18	18	80	6				8	130	$6,693
		Subtotal Task 002		61	112	362	338	66	53		8	1,000	46,095

New Connectors and Parallel Taxiway
Phoenix-Mesa Gateway Airport
Phoenix-Mesa Gateway Airport Authority

DATE: August 2021

OPTION #1
New Connectors and Parallel Taxiway

Kimley»Horn

			Sheets	Senior Project Mgr.	Principal Engineer	Electrical/ Comm. Engineer	Prof. Engineer	Analyst	Senior Analyst Designer	Graphic Designer	Finance/ Project Accountant	Admin/ Clerical	TOTAL MAN-HRS	TOTAL LABOR COST
003	**Final Review Submittal (95%)**													
	Construction Drawings													
1	Cover Sheet, Project Title Sheet		1				1	1					2	$87
2	Index, Legend, Quantities, General Notes		2				1	2					3	$124
3	Project Layout and Horz/Vert Control		2				2	2		1			5	$205
5	Storm Water Pollution Prevention Plan and Details		2				2	4					6	$248
6	Project Site and Access Plan		1				1			2			3	$112
7	Demolition Plans		2	1			4			2			7	$330
8	Construction Phasing Plans		3	1			6	8					15	$665
9	Typical Sections and Details		3				4	8					12	$496
10	Geometric Layout Plans		2	1			10	4	2				17	$802
11	Grading and Drainage Plans		2	1			24	4	8				37	$1,758
12	Storm Drain Profile and Detail Plans		4	1			12		8				21	$1,012
13	Paving Plans		2				2	4					6	$248
14	Taxiway Plan and Profiles		5	1			8	2	4				15	$714
15	Pavement Joint Layout Plans		2	1			2	4					7	$317
16	Pavement Joint Details		1				2			2			4	$162
17	Pavement Marking Plans		2	1			2	6		2			11	$454
18	Pavement Marking Details		1				1			1			2	$81
21	Electrical Symbols, Data Table - Diagram		1			2		2					4	$193
22	Electrical Lighting Layout/Circuiting		2	2		24		18		2			46	$2,289
23	Electrical Details		5			6		10					16	$727
24	Circuit Maps		2			12		12					24	$1,156
25	Technical Supervision and Review			12									12	$823
	Subtotal		47	22		44	84	91	22	12			275	$13,004
	Quantities & Cost Estimate													
1	Calculate Quantities						4	4					8	$348
2	Cost Estimate													
	- Update Final Review (95%) Cost Estimates					2	4	2					8	$392
3	Technical Supervision and Review			2									2	$137
	Subtotal			2		2	8	6					18	$877
	Engineering Design Report													
1	Engineer's Report (95%)													
	- Document with summary and recommendations for civil project layout, pavement design electrical layout, sign plan and voltage calculations, drainage design, exhibits and hydraulic calculations			1		1	24			2			28	$1,386
2	Construction Safety Phasing Plan Report (95%)			1			2	12					15	$614
3	Technical Supervision and Review			2									2	$137
	Subtotal			4		1	26	12		2			45	$2,137
	Project Specifications													
1	Project Specification-General													
	- Cover and Table of Contents						1						1	$50
	- Prepare Boiler Plate including FAA Compliance						6	4					10	$447
	- Prepare Bid Tab and Agreement													
	- Add Geo-Technical Report & FAA Circulars													
2	Specification - Special Provisions			4			9					2	15	$769
	- Prepare Special Conditions for Project													
3	Technical Specification													
	- Prepare Technical specifications- Earthwork, Subgrade, Pavement, Marking,			4			12					2	18	$918
	Electrical			2		8							10	$611
4	Technical Supervision and Review			6									6	$412
	Subtotal			16		8	28	4				4	60	$3,207
	Subtotal Task 003			44		55	146	113	22	14		4	398	19,225

New Connectors and Parallel Taxiway
Phoenix-Mesa Gateway Airport
Phoenix-Mesa Gateway Airport Authority

DATE: August 2021

OPTION #1
New Connectors and Parallel Taxiway

Kimley»Horn

			Senior Project Mgr.	Principal Engineer	Electrical/ Comm. Engineer	Prof. Engineer	Analyst	Senior Analyst Designer	Graphic Designer	Finance/ Project Accountant	Admin/ Clerical	TOTAL MAN-HRS	TOTAL LABOR COST
004	**Issued For Bid Submittal (IFB)**												
	1	Construction Drawings	2		8	20	24					54	$2,498
	2	Quantities & Cost Estimate	2		2	2	2					8	$430
	3	Project Specifications	2		2	24					2	30	$1,497
	4	Technical Supervision and Review	8									8	$549
		Subtotal Task 004	14		12	46	26				2	100	$4,974
005	**Bid Phase Services**												
	1	Pre-Bid Services											
	a	Issue contract documents,	2			4						6	$336
	b	Attend pre-bid conference, answer contractor questions, prepare addendum	4			4						8	$474
	c	Prepare bid tabulate / summary spreadsheet, submit recommendation of award.	2			4						6	$336
		Subtotal Task 005	8			12						20	$1,146
SUBTOTAL - DESIGN			149	2	183	600	477	88	67	8	24	1,598	75,575

Phoenix-Mesa Gateway Airport Authority
5835 S Sossaman Road
Mesa, Arizona 85212-6014
www.gatewayairport.com

Board Action Item

Resolution 21-35

To: Board of Directors
From: Shea Joachim, CEcD, Business Development Director
Through: J. Brian O'Neill, A.A.E., Executive Director/CEO
Subject: Facility Lease with Trident Military Systems, LLC
Date: September 21, 2021

Proposed Motion

To authorize a facility lease with Trident Military Systems, LLC for the facility located at 6145 South Kent Street, Mesa AZ 85212. The lease term is two (2) years, commencing on October 1, 2021 with three (3) additional renewal periods of one (1) year each.

Narrative

Trident Military Systems, LLC ("Trident") has been leasing the facility at 6145 S. Kent Street since October 2016. Trident has requested a new lease to extend their occupancy on the facility for at least another two years.

Agreement Term and Rate

The Term of the Agreement is two (2) years commencing on October 1, 2021. The Agreement provides three (3) additional renewal periods of one (1) year each.

As of the Effective Date of the Agreement, the Base Rent for the facility is $95,657.80 annually paid in monthly installments of $7,971.48 plus applicable taxes. The Base Rent will increase by two (2) percent on every twelve (12) month anniversary of the Effective Date of the Agreement.

Attachment(s)

Facility Lease Agreement

RESOLUTION NO. 21-35

WHEREAS, the Phoenix-Mesa Gateway Airport Authority ("Authority"), a joint powers airport authority formed pursuant to Arizona Revised Statute §28-8521 *et seq.* owns and operates the Phoenix-Mesa Gateway Airport ("Airport"); and

WHEREAS the Authority desires to authorize a facility lease with Trident Military Systems, LLC for the facility located at 6145 South Kent Street, Mesa AZ 85212. The lease term is two (2) years, commencing on October 1, 2021 with three (3) additional renewal periods of one (1) year each.

NOW, THEREFORE, BE IT RESOLVED by the Board of Directors of the Authority as follows:

> **The Board of Directors of the Authority hereby authorize a facility lease with Trident Military Systems, LLC for the facility located at 6145 South Kent Street, Mesa AZ 85212. The lease term is two (2) years, commencing on October 1, 2021 with three (3) additional renewal periods of one (1) year each. This resolution also authorizes the Chair or Executive Director/CEO to make such additions, deletions, and changes as may be approved by the Chair or Executive Director/CEO, necessary to carry out the purposes and intent of this Resolution.**

Passed and adopted by the Authority this 21st day of September, 2021.

_____
John Giles, Chair

ATTEST:

_____
Misty Johnson, Clerk of the Board

APPROVED AS TO FORM:

_____
Jill Casson Owen, Attorney

Phoenix-Mesa Gateway Airport Authority

FACILITY LEASE

with

Trident Military Systems, LLC

<u>Effective Date</u>: October 1, 2021

TABLE OF CONTENTS

1. LEASE 2
2. TERM 4
3. NON-EXCLUSIVE RIGHTS 4
4. RENT 4
5. PERFORMANCE GUARANTEE 5
6. AIRCRAFT OPERATIONS GUIDELINES 6
7. IMPROVEMENTS 6
8. MAINTENANCE 6
9. ASSIGNMENT, SUBLETTING AND OTHER TRANSFERS 7
10. IDENTIFICATION SIGNS 8
11. DEFAULT; TERMINATION BY LESSOR 8
12. ASSUMPTION OF CRITICAL OPERATIONS 10
13. INDEMNIFICATION 10
14. ENVIRONMENTAL PROTECTION 10
15. PROTECTION OF WETLANDS 14
16. SPECIAL PROVISIONS 14
17. INSURANCE 14
18. SURRENDER OF POSSESSION. 15
19. INSPECTION BY LESSOR 16
20. NOTICES 16
21. SEVERABILITY 16
22. SALES AND PROPERTY TAXES 16
23. APPROVALS, CONSENTS AND NOTICES 16
24. LIENS AND MORTGAGES 17
25. GOVERNING LAW 19
26. RULES AND REGULATIONS 19
27. CORPORATE AUTHORIZATION 20
28. UTILITY LINES AND SERVICE CHARGES 20
29. RESERVATIONS TO LESSOR 20
30. FEDERAL AVIATION ADMINISTRATION (FAA) PROVISIONS 20
31. TITLE VI 21
32. FEDERAL FAIR LABOR STANDARDS ACT 24
33. OCCUPATIONAL SAFETY AND HEALTH ACT OF 1970 24
34. INCORPORATION OF QUITCLAIM DEED 24
35. REQUIRED PROVISIONS OF QUITCLAIM DEED 24
36. ARCHEOLOGICAL OR CULTURAL RESOURCES 25
37. AIRPORT SECURITY 25
38. DEFAULT BY LESSOR 25
39. BROKERS 26
40. SALE BY LESSOR 26
41. ESTOPPEL CERTIFICATE 26
42. MISCELLANEOUS 26
43. INCORPORATION OF RECITALS 27

EXHIBIT A (Depiction of the Premises) A-1
EXHIBIT B (Airport Rates and Charges Schedule & Airport Fees, Services and Rental Rates Schedule) B-1
EXHIBIT C (Aircraft Operations Guidelines) C-1
EXHIBIT D (Airport Minimum Standards and Airport Rules and Regulations) D-1
EXHIBIT E (Storm Water Permit Compliance) E-1
EXHIBIT F (Standard Terms and Conditions) F-1

Phoenix-Mesa Gateway Airport Authority
FACILITY LEASE

This Facility Lease ("Lease") is executed to be effective the FIRST (1) day of OCTOBER, 2021 ("Effective Date") between the **PHOENIX-MESA GATEWAY AIRPORT AUTHORITY**, a joint powers authority authorized by the State of Arizona ("Lessor"), and **TRIDENT MILITARY SYSTEMS, LLC**, an Arizona limited liability company ("Lessee"). Lessor and Lessee may be referred to jointly as "Parties," and each separately may be referred to as a "Party."

WITNESSETH:

WHEREAS, Lessor is the owner and operator of the Phoenix-Mesa Gateway Airport generally located at the intersection of Ray Road and Sossaman Road, City of Mesa, Maricopa County, Arizona (Airport"); and

WHEREAS, Lessor has the right to lease, license and grant the use of property and facilities on the Airport and has full power and authority to enter into this Lease in respect thereof; and

WHEREAS, Lessor desires to lease to Lessee, and Lessee desires to lease from Lessor, that certain real property at the Airport located at 6145 South Kent Street, Mesa AZ 85212, and described as building 568, consisting approximately TEN THOUSAND ONE HUNDRED NINTY-THREE (10,193) square feet, as set forth in **EXHIBIT A** attached hereto ("Premises"); and

WHEREAS, Lessor desires to lease the Premises to Lessee on the terms and conditions set forth herein;

NOW THEREFORE, in consideration of the foregoing and of the mutual covenants and agreements herein contained, the Parties do hereby undertake, promise and agree, each for itself and its successors and assigns, as follows:

1. LEASE

Lessor hereby leases the Premises to Lessee, subject to all easements and rights of way that may encumber the Premises, and further subject to all operational and use restrictions and other terms and conditions set forth in this Lease.

1.1 Right to Use Premises. Lessor agrees that so long as Lessee shall timely pay the Base Rent and other charges required to be paid hereunder, and perform all of its other obligations under this Lease, Lessee shall peaceably have and enjoy the use of the Premises without hindrance from Lessor. Lessee specifically acknowledges that Lessee has inspected the Premises prior to entering into this Lease and agrees to accept the Premises in an "as is, where is" condition without any warranty or representation from Lessor, either express or implied, of any kind or nature whatsoever with respect to the Premises, including, but not limited to, any warranty of merchantability, habitability, or fitness for any particular or specific purpose, and all such warranties are hereby disclaimed. Should Lessee desire any inspection report, environmental assessment, survey, creation of a legal description, drainage report, or any similar study, Lessee shall be responsible for the same at Lessee's sole expense.

1.2 Substitution of Premises. In addition to Lessor's other rights set forth in this Lease, Lessor reserves the right, upon no less than Ninety (90) calendar days prior written notice to Lessee, to substitute Comparable Areas for all or any portion of the Premises, including any additions, alternations or improvements thereon, should Lessor, in its reasonable discretion, determine that taking of the Premises, any portion thereof or any improvement thereon, is required for other Airport purposes, and there exists no appropriate alternative. In the event Lessor makes the determination to exercise its rights to substitute, all title, right and interest to the portion of the Premises taken shall immediately vest in Lessor on the date that is Ninety (90) calendar days following receipt of Lessor's notice, or such later date as specified therein. Furthermore, Lessor may require Lessee to vacate any portion or all of the Premises taken. For the purposes of this Section 1.2, the term "Comparable Areas" is defined to mean other facilities at the Airport, or any additions or extensions thereof, similar in size to the Premises, brought to the same level of improvement as the Premises and having the same or similar usefulness to Lessee as the portion taken. Lessor shall bear all expenses of bringing the substituted area to the same level of improvement as the Premises, and of moving Lessee's improvements, equipment, furniture and fixtures to the substituted area. If any of Lessee's improvements, equipment, furniture or fixtures cannot be relocated, Lessor shall replace, at Lessor's expense, such non-relocatable improvements and other property with comparable property in the Premises, and Lessor shall be deemed the owner of the non-relocated improvements and other property, free and clear of all claims of any interest or title therein by Lessee, or any other third party whomsoever. It is the specific intent of this Section 1.2 that Lessee be placed, to the extent possible, in the same position it would have been, had Lessor not substituted new premises for the Premises; provided, however, that Lessor shall not be obligated to reimburse Lessee for any damages, including lost profits or revenues, due to such substitution. Notwithstanding the foregoing, Lessor shall use reasonable efforts to avoid disruption to Lessee's business.

1.3 Access. Lessee is granted the right of reasonable access to and from the Premises via such portions of the Airport as are or may be necessary to allow Lessee to conduct its business operations permitted herein at and on the Premises and the Airport. Lessor reserves the right to designate the location of such access and to change its location from time to time, as Lessor deems reasonably necessary and appropriate; provided such changes do not materially interfere with Lessee's use of or access to the Premises.

1.4 Permitted Uses. Subject to the provisions of Section 1.5, Lessee may use the Premises for general administrative office space, Non-Aeronautical manufacturing and assembling, and storing flight simulators and other electronic equipment. Lessee's use of the Premises and operation of its business at and on the Airport and the Premises is subject to all applicable laws, rules and regulations of any governmental authority, including Lessor, and to Lessee's compliance with applicable provisions of the *Airport Rules and Regulations* and *Airport Minimum Standards*.

1.5 Prohibited Activities. Lessee shall not use or permit its agents, employees, contractors, invitees, licensees or customers to use the Premises or the Airport for any use that is in violation of the *Airport Rules and Regulations*, the *Airport Minimum Standards*, any matters of record, or applicable laws, rules, regulations and operating policies of any governmental authority, including Lessor, or for any other activity or operation not specified in Section 1.4 herein, or that does not have advance, written approval of Lessor's Executive Director.

1.6 Continuous Operation. Upon commencement of business operations at and on the Premises and the Airport, Lessee shall designate an on-site manager for the term of this Lease who shall be available to Lessor and Lessee's customers, if any, during normal business hours, and otherwise as required by the *Airport Minimum Standards*, as applicable.

1.7 Lessee Acknowledgement. Lessee acknowledges and agrees that its obligations to pay Base Rent and all other charges due and owing under the terms hereof shall be absolute and unconditional, and shall not be affected by any circumstances whatsoever, including, without limitation: (i) any set-off, counterclaim, recoupment, defense or other right which Lessee may have against Lessor or the United States of America or anyone else for any reason whatsoever; (ii) any liens, encumbrances or rights of others with respect to the Premises; (iii) the invalidity or unenforceability or lack of due authorization or other infirmity of this Lease or

any lack of right, power or authority of Lessor or Lessee to enter into this Lease; (iv) any insolvency, bankruptcy, reorganization or similar proceedings by or against Lessee, or any other person; or (v) any other cause, whether similar or dissimilar to the foregoing, any future or present law notwithstanding, it being the intention of the Parties hereto that all rent being payable by Lessee hereunder shall continue to be payable in all events and in the manner and at the times provided herein.

2. TERM

2.1 Initial Term. The term of this Lease shall be for a period of TWO (2) years, commencing on the Effective Date and terminating on SEPTEMBER 30, 2023 thereafter ("Term").

2.2 Renewal Terms. Provided Lessee is not then in default of this Lease and subject to written approval of Lessor, the Parties shall have the option of extending the Term for THREE (3) additional periods of ONE (1) year each ("Extension"). Lessee may initiate an Extension by giving written notice to Lessor of its desire to do so no later than Sixty (60) calendar days prior to the expiration of the Term, as set forth in Section 2.1 herein. If Lessee has properly notified Lessor of its desire to exercise an Extension and Lessor approves such in writing, then Lessee's Extension of the Term of this Lease shall become effective and all references herein to "Term" shall mean the initial term as extended.

3. NON-EXCLUSIVE RIGHTS

Lessee shall have the exclusive right to occupy and use the Premises while in compliance with the terms and conditions of this Lease. All other rights granted to Lessee under this Lease are nonexclusive. Lessor may, in its sole discretion and at any time, permit third parties to conduct any and all business activities at the Airport that Lessor deems appropriate, or conduct such activities itself, provided that such activities do not require or materially interfere with Lessee's use of the Premises.

4. RENT

4.1 Base Rent. Lessee agrees to pay Lessor annual rental for the use of the Premises in the amount of NINTY-FIVE THOUSAND SIX HUNDRED FIFTY-SEVEN AND 80/00 DOLLARS ($95,657.80), payable in equal monthly installments of SEVEN THOUSAND NINE HUNDRED SEVENTY-ONE AND 48/100 DOLLARS ($7,971.48) ("Base Rent"). The Base Rent shall be payable in advance, without any prior demand therefor and without any abatement, deductions or set-offs whatsoever, and tendered in lawful currency of the United States, either by check or electronic transfer.

4.2 Rent Increases. The annual Base Rent paid by Lessee shall be increased (but never decreased) on every Twelve (12) month anniversary of the Effective Date of this Lease by Two Percent (2%).

4.3 Reserved.

4.4 Airport Rates and Charges Schedule. Lessee or its subtenants, as applicable and including its contractors, agents, etc., shall pay all fees identified in the most current *Airport Rates and Charges Schedule* and/or *Airport Fees, Services and Rental Rates Schedule* at the time of receipt of any covered service or use of any covered facilities, unless specifically outlined in this Lease. The current *Airport Rates and Charges Schedule* and/or *Airport Fees, Services and Rental Rates Schedule* is included as **EXHIBIT B** and incorporated herein by reference and is subject to change without prior notice or approval of Lessee. Lessee acknowledges and agrees that Lessor may amend the *Airport Rates and Charges Schedule* and/or *Airport Fees, Services and Rental Rates Schedule* at any time at Lessor's sole discretion, and that no fee [referenced in the *Airport Rates and Charges Schedule* and/or *Airport Fees, Services and Rental Rates Schedule* shall apply to the use of the Premises or access to the Premises.

4.5 Payment.

4.5.1 Unless otherwise specified herein, the first payment of Base Rent shall be paid to Lessor upon the delivery of this Lease, for the period from the Effective Date until the end of the calendar month in which the Effective Date occurs, prorated on the basis of the number of such days to the total number of days in said month. All payments referenced in this Lease shall be payable exclusively in United States

Dollars. Thereafter, all Base Rent payments shall be paid in monthly installments, in advance, on the first day of each calendar month ("Base Rent Due Date"). On each such date, Lessee shall pay the full Base Rent payment.

4.5.2 No payment to or receipt by Lessor of a lesser amount than that which is due and payable under the provisions of this Lease at the time of such payment shall be deemed to be other than a payment on account of the earliest payment due, nor shall any endorsement or statement on any check or payment prejudice in any way Lessor's right to recover the balance of such payment or pursue any other remedy provided in this Lease or by law.

4.5.3 All payments (and reports, if any) required by this Section 4.5 shall be remitted to the following address by the due date(s) specified hereinabove:

Phoenix-Mesa Gateway Airport Authority
Attn.: Department of Finance (Accounts Receivable)
5835 S. Sossaman Road
Mesa, Arizona 85212-6014
or such other address specified in writing by Lessor to Lessee.

4.6 Finance Charges and Late Fees. If Lessee fails to pay any installment of Base Rent or any other charge due and owing to Lessor in full on or before the applicable due date, Lessee shall be responsible for interest on the unpaid installment at the rate of Eighteen Percent (18%) per annum from the due date until payment in full is made. In addition, in the event any installment of Base Rent or other charge owing to Lessor is paid more than Ten (10) calendar days after the due date, a late penalty of Ten Percent (10%) of the amount of such delinquent Base Rent installment or other charge shall be due and payable in addition thereto.

4.7 Taxes. In the event any governmental authority shall impose a tax or imposition based upon any Base Rent payments or any other sums paid or owing hereunder, or the receipt of such payments by Lessor, Lessee shall pay such amounts to Lessor at the same time and in addition to payments hereunder, which amounts may include, but are not limited to, any or all rental, transaction privilege, sales, excise or other similar tax except income taxes.

4.8 Survival. Lessee's obligation to pay all amounts stated herein, together with any interest thereon and/or penalties therefor, shall survive the termination of this Lease.

5. PERFORMANCE GUARANTEE

5.1 Security Deposit.

5.1.1 On or before the Effective Date, Lessee shall pay to Lessor an amount equivalent to TWO (2) month's Base Rent, or FIFTEEN THOUSAND NINE HUNDRED FORTY-TWO AND 96/100 DOLLARS ($15,942.96), as a security deposit ("Security Deposit") to insure the faithful performance of all of Lessee's obligations hereunder.

5.1.2 The Security Deposit, at the election of Lessor, may be applied in reduction of any loss and/or damage sustained by Lessor by reason of the occurrence of any breach, nonperformance or default by Lessee under this Lease without the waiver of any other right or remedy available to Lessor at law, in equity or under the terms of this Lease. If any portion of the Security Deposit is so used or applied, Lessee shall, within five (5) business days after written notice from Lessor, deposit with Lessor immediately available funds in an amount sufficient to restore the Security Deposit to its original amount. In the event of a sale or other transfer of the Premises by Lessor, Lessor shall transfer the remaining balance (if any) of the Security Deposit to Lessor's successor in interest, whereupon the transferor Lessor shall be released from liability to Lessee for the return of such Security Deposit. Unless this Lease is terminated as a result of Lessee's default whereupon Lessee shall immediately forfeit its Security Deposit to Lessor, upon termination, Lessor shall return to Lessee all portions of the Security Deposit which were not otherwise applied by Lessor as permitted above. Lessor shall have no obligation to maintain a separate account for such security deposit and shall have no obligation to pay interest thereon.

5.2 Reserved.

6. AIRCRAFT OPERATIONS GUIDELINES

If and to the extent that Lessee, including its subtenants, contractors, agents, etc., operates aircraft at or on the Airport, Lessee shall be subject to the provisions of **EXHIBIT C**. If any subtenant, contractor or agent of Lessee conducting activities on or at the Premises operates aircraft at the Airport, all shall be subject to the provisions of **EXHIBIT C**, which Lessor may enforce directly against such subtenant, contractor or agent, but Lessee shall have no direct liability or responsibility with respect to such matters; except, however, Lessee shall be responsible for compliance by its subtenants, contractors and/or agents with the Airport Rules and Regulations and Minimum Standards, as appropriate.

7. IMPROVEMENTS

7.1 Reserved.

7.2 Reserved.

7.3 No Alterations. Lessee shall make no material improvements or alterations to the Premises during the Term of this Lease without the prior written permission of Lessor, which shall not be unreasonably withheld or delayed and, if and to the extent applicable, without the approval by Lessor's Design Review Committee. Lessee shall provide Lessor with electronic as-built drawings (or their equivalent) when any improvement or alteration is completed for which such drawings are reasonably required.

7.4 Title to Alterations and Improvements. Title to all Improvements and alterations on the Premises (but not personal property or trade fixtures) shall vest in Lessor upon the expiration of this Lease, and Lessee agrees to execute and deliver to Lessor, within Ten (10) business days after Lessor's request therefor, a quitclaim deed confirming that title to such improvements and alterations is vested in Lessor.

7.5 Mechanics' Liens. Lessee shall keep the Premises and all improvements constructed by Lessee thereon free of any mechanic or materialmen's liens. In the event that any such lien is filed, Lessee shall, at its sole cost, cause such lien to be removed from the Premises by bonding or otherwise within Thirty (30) calendar days of notice thereof.

7.6 Permit Required. Lessee shall be responsible for determining whether it is subject to local building/construction codes or permit requirements, and for compliance with them to the extent they are applicable. All structural, electrical, plumbing or mechanical construction or reconstruction shall conform to City of Mesa ("City") construction and technical codes. No such work shall be commenced without first submitting required plans and obtaining required permits from the City. All such work shall be permitted, inspected and approved by the City prior to concealment or use. Lessee shall provide to Lessor a contemporaneous copy of Lessee's permit application and the associated plans and specifications.

7.7 Damage or Destruction. Lessee shall maintain insurance on all of Lessee's improvements to the Premises. In the event that all or any portion Lessee's improvements are destroyed or rendered unusable due to fire or other catastrophe, Lessee shall replace, repair, restore, modify or improve said improvements, subject to the provisions of Section 7.6, using available insurance proceeds together with any additional funds from other available sources, or, alternatively, Lessee shall pay the replacement cost of the improvements to Lessor.

8. MAINTENANCE

8.1 Responsibilities.

8.1.1 *Lessor.* Lessor shall, at its sole cost and expense, keep the premises and all improvements therein in good order, condition, and repair throughout the Term; except however, that Lessor shall not be responsible for the maintenance and/or repair of Lessee's furnishings, trade fixtures or equipment. In performing such premises maintenance, Lessor will prepare, maintain, and follow a preventative maintenance schedule for all mechanical, electrical, plumbing, drain, piping and air conditioning systems on the Premises.

Lessor's maintenance of the Premises shall consist of the inspection, servicing and repair of all systems and improvements, including the interior roof and structures, electrical, plumbing, heating and cooling, fire detection and suppression, pavements, pest control, landscaping and grounds maintenance.

8.1.2 *Lessee.* Lessee shall, at its sole cost and expense, keep the Premises and all improvements therein in a neat and clean condition throughout the Term. Lessee is responsible for all custodial services, telecommunications, and refuse for the Premises.

8.2 Damage to Lessor Property. Any real or personal property of Lessor damaged or destroyed by Lessee as a result of Lessee's use or occupancy of the Premises shall be promptly repaired or replaced by Lessee to the satisfaction of Lessor. In lieu of such repair or replacement, where required by Lessor, Lessee shall pay to Lessor an amount sufficient to compensate for the loss sustained by Lessor.

8.3 Trash Removal. Lessee shall at all times keep the Premises in a neat, clean, safe, sanitary and orderly condition and shall keep such area free of all trash and debris. Lessee shall, at Lessee's expense, be responsible for all trash removal from the Premises. Such trash removal shall be performed on a not less than weekly basis, and all trash shall be disposed of off the Airport. Prior to its removal from the Airport, Lessee shall deposit all trash and debris only at collection stations located on the Premises, in accordance with City code.

8.4 Emergency Repairs. Within Fifteen (15) calendar days of the Effective Date, Lessee shall provide Lessor with a list of names and telephone numbers for 24-hour emergency contact for the Premises. Lessee shall promptly provide Lessor with updated lists and changes as necessary.

9. ASSIGNMENT, SUBLETTING AND OTHER TRANSFERS

9.1 Any Transfer of Lease Interest Requires Lessor Advance Written Approval. In the event Lessee desires to transfer, assign, encumber, pledge or hypothecate any portion of its interest in this Lease or any right or interest hereunder (including, but not limited to as part of a mortgagor deed of trust or an assignment by means of a foreclosure or trustee's sale thereunder)(individually and collectively, "Transfer"), Lessee must obtain the prior written consent of Lessor, with such consent to be the in sole and absolute discretion of Lessor without exception. Where Lessor approves in writing of such Transfer, Lessor shall be entitled to request and acquire written financial assurances, including, but not limited to financial statements, business plans and other information related to the financial condition and plans of any proposed transferee. Further, Lessor, may in its sole and absolute discretion require that Lessee still be liable at law and at equity, as well as financially liable, under the Lease, regardless of whether the assignee expressly assumes in writing all of Lessee's obligations under this Lease or in the case of a sublease. Lessee understands and agrees to these terms and conditions regarding any proposed Transfer, and that any violation of this Section 9, may irreparably harm Lessor as the requirements set forth herein are directly related to PMGAA's (and any Lessee's) legal and financial obligations to the Federal Aviation Administration. This Section 9 shall remain valid and enforceable even in the event of amendment to or repeal of FAA regulations, so long as this Section 9 does not directly conflict therewith.

9.2 Lessee's Required Advance Notice to Lessor of Proposed Transfer. In order for Lessor to even consider a Transfer, Lessee must: (i) notify Lessor in writing at least Forty-five (45) calendar days prior to such proposed transfer; (ii) deliver to Lessor, at the time of Lessee's notice, current financial statements of Lessee and the proposed transferee (along with transferee's business plans) that are reasonably acceptable to Lessor; and (iii) the transferee assumes and agrees in writing to perform Lessee's obligations under this Lease. However, nothing herein shall be construed as Lessor providing its consent to any Transfer or relieving Lessee of any legal, financial or other obligation under the Lease, regardless of Lessor's acceptance or refusal to accept such proposed transfer of Lease. For purposes of this Section 9.2, "Affiliate" means any person or entity that, directly or indirectly, controls, is controlled by or is under common control with Lessee. For purposes of this definition, "control" shall mean possessing the power to direct or cause the direction of the management and policies of the entity by the ownership of a majority of the voting securities of the entity.

9.3 Deemed Transfers. For the purposes of this Lease, a Transfer shall be deemed to include, but not be limited to, the following: (i) if Lessee is a corporation, partnership, limited liability company or other legal entity, the transfer of any ownership interest in such entity resulting in a change in the present control of such entity by the person or persons owning a majority of the ownership interest thereof as of the date of this Lease; provided, however, if Lessee is a corporation whose stock is traded on a nationally recognized stock exchange, the transfer of Lessee's stock shall not constitute a Transfer requiring Lessor's consent; or (ii) the sale of Twenty-Five Percent (25%) or more in value of the assets of Lessee.

9.4 Subletting. Lessee shall not sublease the Premises or any portion thereof at any time during the Term of this Lease.

9.5 Reserved.

9.6 This Lease and all provisions hereof are subject and subordinate to the terms and conditions of the instruments and documents under which PMGAA acquired the subject property from the United States of America and shall be given only such effect as will not conflict or be inconsistent with the terms and conditions contained in the lease of said lands from PMGAA and any existing or subsequent amendments thereto, and are subject to any ordinances, rules or regulations which have been, or may hereafter be adopted by PMGAA pertaining to the Airport.

10. IDENTIFICATION SIGNS

Lessee may install on the Premises, a sign or signs identifying its business on the exterior of the Premises; provided, however, that the general type, size, and location of such sign(s) shall conform to Lessor's Comprehensive Sign Plan, be approved in writing by Lessor in advance of installation and be subject to any signage rules, codes and/or regulations of any governmental authority.

11. DEFAULT; TERMINATION BY LESSOR

11.1 Events of Default. Each of the following shall constitute a material default of this Lease by Lessee ("Event of Default"):

11.1.1 Failure to pay any installment of Base Rent or other amount due from Lessee hereunder, or required by any other agreement between the Parties, provided that Lessee does not cure such failure within Ten (10) business days after delivery by Lessor of a written notice of such failure.

11.1.2 Failure to perform any of its other obligations under this Lease, provided that Lessee does not cure such failure within Thirty (30) calendar days after delivery by Lessor of a written notice of such default; provided, however, if a cure of the default reasonably requires more than Thirty (30) calendar days to complete, then the time to cure shall be extended so long as the cure is being diligently pursued.

11.1.3 The filing of any mechanic's, materialmen's or other lien of any kind against the Premises because of any act or omission of Lessee which lien is not discharged, by bonding or otherwise, within Thirty (30) calendar days of receipt of actual notice thereof by Lessee.

11.1.4 The Transfer or attempted transfer of any interest in the Lease to any transferee without Lessor's advance written authorization, which Lessor may withhold in its sole and absolute discretion.

11.2 Lessor's Remedies. Upon the occurrence of an Event of Default under this Lease, Lessor may, without prejudice to any other rights and remedies available to a Lessor at law, in equity or by statute, but subject to the provisions of Sections 9.2 and 23 herein, exercise one or more of the following remedies, all of which shall be construed and held to be cumulative and non-exclusive:

11.2.1 Terminate this Lease and re-enter and take possession of the Premises; or

11.2.2 Without terminating this Lease, re-enter and take possession of the Premises; or

11.2.3 Without such re-entry, recover possession of the Premises in the manner prescribed by any statute relating to summary process, and any demand for Base Rent, re-entry for condition broken, and

any and all notices to quit, or other formalities of any nature to which Lessee may be entitled, are hereby specifically waived to the extent permitted by law; or

11.2.4 With or without terminating this Lease, Lessor may re-let the Premises or any portion thereof.

11.3 No Implied Termination. Lessor shall not be deemed to have terminated this Lease unless Lessor shall have notified Lessee in writing that it has so elected to terminate this Lease. Lessee hereby waives all claims based on Lessor's reentering and taking possession of the Premises, or removing and storing the property of Lessee, and shall save Lessor harmless from all losses, costs or damages occasioned thereby. No such reentry shall be considered or construed to be a forcible entry by Lessor.

11.4 Lessor's Current Damages. Lessor is authorized to make such repairs, refurbishments or improvements to the Premises as may be necessary for the purpose of attempting to re-let the Premises, and the costs and expenses incurred in respect of such repairs, redecorating, refurbishments and improvements shall be paid by Lessee to Lessor within Five (5) business days after receipt of Lessor's statement. If Lessor exercises any of the remedies stated above, Lessor shall be entitled to recover from Lessee all damages incurred by Lessor by reason of the Event of Default, which shall include, without limitation, (i) the equivalent of the amount of the Base Rent and all other payments which would be payable under this Lease by Lessee for the remainder of the Term as if this Lease were still in effect, less (ii) the net proceeds of any re-letting by Lessor after deducting all of Lessor's expenses in connection with such re-letting, which shall include, without limitation, repossession costs, repairs, redecorating, refurbishments or improvements to the Premises, brokerage commissions, attorneys' fees, and legal expenses. Lessee shall pay such current damages to Lessor, in the amount set forth in the preceding sentence (hereinafter called "Deficiency"), in monthly installments on the days on which the Base Rent would have been payable under this Lease as if this Lease were still in effect. All amounts collected by Lessor from subtenants shall be credited against Lessor's damages.

11.5 Lessor's Final Damages. At any time after an Event of Default, whether or not Lessor shall have collected any monthly Deficiency as set forth above, Lessor shall be entitled to recover from Lessee, and Lessee shall pay to Lessor, on demand, as final damages for the applicable Event of Default, the sum of (a) the then present worth (at a discount at the rate of Six Percent (6%) per annum) of (i) the aggregate of the Base Rent and all other amounts to be paid by Lessee hereunder for the unexpired portion of the term of this Lease (assuming this Lease had not been terminated), less (ii) the amount of such loss that could have been reasonably avoided, plus (b) repossession costs, Lessor's expenses in connection with any attempts it may have made to re-let the Premises (which shall include, without limitation, repairs, refurbishments or improvements to the Premises and brokerage commissions), attorneys' fees, legal expenses, and all other damages incurred by Lessor as a result of such Event of Default. In determining the amount of loss that could reasonably be provided, rents to be paid by subtenants pursuant to Section 9.4, if applicable, and other reasonably projected rental income from leasing the Premises shall be taken into account.

11.6 No Waiver by Lessor. No waiver by Lessor of any breach or default by Lessee in the performance of its obligations under this Lease shall be deemed to be a waiver of any subsequent default by Lessee in the performance of any of such obligations, and no express waiver shall affect an Event of Default in a manner other than as specified in said waiver. The consent or approval by Lessor to or of any act by Lessee requiring Lessor's consent or approval shall not be deemed to waive or render unnecessary Lessor's consent or approval to or of any subsequent similar acts by Lessee.

11.7 Content of Default Notice. Any default notice tendered to Lessee hereunder shall be deemed to be sufficient if it is reasonably calculated to put Lessee on inquiry as to the nature and extent of such default, and is made in accordance with Section 20 herein.

11.8 Limitation on Exercise of Termination Remedy by Lessor. Notwithstanding anything to the contrary in Section 11.2 hereinabove, if an Event of Default occurs, Lessor shall not have the remedy of terminating this Lease or of taking possession of the Premises unless: (i) the Event of Default consists of a failure to pay off Base Rent or other amounts owed to Lessor; or (ii) Lessor has no other remedy that is adequate

to protect Lessor's interests. Other remedies that are available to Lessor include self-help and recovery of damages, and nothing in this Section 11 shall limit the exercise of any such other remedy.

11.9 Waiver of Landlord's Lien. Lessor hereby waives all statutory or common law landlord's lien rights with respect to personal property located on the Premises.

12. RESERVED

13. INDEMNIFICATION

To the fullest extent permitted by law, Lessee hereby agrees to defend, indemnify and hold harmless Lessor and its members, elected or appointed officials, agents, contractors, subcontractors, boards, commissions and employees (hereinafter referred to collectively as "Lessor" for purposes of this Section 13) for, from and against any and all claims, causes of action, liability, suits, litigation (including reasonable attorney's fees and other costs of investigation and litigation), actions, losses, damages or claims of any nature whatsoever which arise out of or in connection with (i) any accident, injury or damages occurring within the Premises, or (ii) any negligent act or omission of Lessee or its agents, employees, contractors, or subcontractors (hereinafter referred to collectively as "Lessee" for purposes of this Section 13) in connection with Lessee's operations hereunder and which result directly or indirectly in the injury to or death of any persons or the damage to or loss of any property, or (iii) the failure of Lessee to comply with any provisions of this Lease. This indemnification shall exclude responsibility for any consequential damages and for claims arising by reason of the negligent or wrongful act of Lessor or its employees, contractors or agents.

14. ENVIRONMENTAL PROTECTION

14.1 Definitions. Unless the context shall clearly require otherwise, the terms defined in this Section 14 shall, for all purposes of this Lease and of any agreement amendatory hereof or supplemental hereto, have the meanings herein specified, with the following definitions to be equally applicable to both the single and plural forms of any of the following:

14.1.1 *Environmental Laws.* The term "Environmental Laws" shall mean any one or all of the following, as the same are amended from time to time: the Comprehensive Environmental Response, Compensation, and Liability Act, 42 USC Section 9601 et seq.; the Resource Conservation and Recovery Act, 42 USC Section 6901, et seq.; the Toxic Substances Control Act, 15 USC Section 2601 et seq.; the Safe Drinking Water Act, 42 USC Section 300f et seq.; the Clean Water Act, 33 USC Section 1251 et seq.; the Clean Air Act, 42 USC Section 7401 et seq.; the Arizona Hazardous Waste Management Act, A.R.S. Section 49-921 et seq. the Arizona Environmental Quality Act, A.R.S. Title 49, as amended; and all regulations thereunder and any other laws, regulations and ordinances (whether enacted by the local, state or federal government) now in effect or hereafter enacted that deal with the regulation or protection of the environment, including the ambient air, ground water, surface water, and land use, including substrata land, or that govern the use of hazardous materials, solid and hazardous waste, hazardous substances and petroleum products.

14.1.2 *Hazardous Material.* The term "Hazardous Material" shall mean any toxic or hazardous material, substance or waste, or any pollutant or contaminant as defined or regulated pursuant to any Environmental Law and petroleum products. For purposes of this definition, petroleum includes petroleum-based substances comprised of a complex blend of hydrocarbons derived from crude oil through processes of separation, conversion, upgrading and finishing (e.g., distillate fuel oils, petroleum solvents and used oils).

14.2 Release by Lessor. Lessor shall indemnify Lessee to the fullest extent permitted by law for any and all environmental damage of any kind, or for the effects of Hazardous Material on the environment, or on any person or property, if any, which have been caused by the use of, or releases from, the Premises and the Airport prior to Lessee's occupancy of any part thereof. Lessee is not liable for any claims or damages arising from environmental damage resulting from or that are the result of contamination of any kind existing on the Premises or surrounding sites prior to Lessee's occupancy of thereof.

14.3 Lessee Compliance.

14.3.1 Lessee shall, at the Lessee's own expense, comply with all present and hereafter enacted Environmental Laws, including any amendments thereto, affecting Lessee's activities on and property interest in the Premises during the period of Lessee's occupancy thereof under this Lease. To the extent that Lessor, or any of Lessor's employees, agents or contractors, conducts any activities on the Premises during the period of Lessee's occupancy, Lessor shall, at Lessor's own expense, comply with all present and hereafter Environmental Law, including any amendments thereto, affecting any of Lessor's activities on the Premises.

14.3.2 Lessee shall not cause or permit any Hazardous Material to be brought upon, kept or used in or about the Premises or the Airport by Lessee's agents, employees, contractors or invitees in violation or threatened or suspected violation of any Environmental Law. The Parties recognize and agree that Lessee may bring on the Premises and Airport and use Hazardous Materials that are ordinarily and customarily used in the conduct of Lessee's permitted activities under this Lease, provided that such use shall comply fully with all applicable Environmental Laws.

14.4 Indemnification. To the fullest extent permitted by law, Lessee shall indemnify, defend (with counsel reasonably acceptable to Lessor), protect and hold harmless Lessor and its employees and agents for, from and against any and all liability, loss, damage, expense, penalties and legal and investigation fees or costs, arising from or related to any claim or action for injury, liability, or damage to persons or property and any and all claims or actions brought by any person, entity or governmental body, alleging or arising in connection with contamination of the environment or violation of any Environmental Law or other statute, ordinance, rule, regulation, judgment or order of any government or judicial entity ("Environmental Damages") which are incurred or assessed as a result of any of Lessee's activities or operations on the Premises or Airport. This obligation includes, but is not limited to, all costs and expenses related to cleaning up the property, land, soil and underground or surface water as required under the law. Lessee's obligations and liabilities under this Section 14.4 shall survive the termination of this Lease. The indemnification of Lessor by Lessee as described above includes, without limitation, costs incurred in connection with any investigation of site conditions or any cleanup, remedial, removal or restoration work required by any federal, state or local governmental agency or political subdivision. Lessor reserves the right to seek injunctive relief as may be permitted under law and equity. This Section 14.4 explicitly excludes Lessee duty, liability or indemnity to Lessor for any claims or Environmental Damages of any kind whatsoever arising from or in connection with any contamination of any kind existing on the Premises prior to the Effective Date, except and only to the extent known contamination is exacerbated by Lessee or unknown contamination is exacerbated by Lessee's negligence.

14.5 Remediation. Without limiting the foregoing, if the presence of any Hazardous Material during the Term of this Lease caused or permitted by Lessee to be first brought on the Airport or Premises upon or after the Effective Date results in any Release on the Airport or Premises in violation of any Environmental Law, Lessee shall promptly take action to remediate the affected property at its sole expense as necessary to return the Airport or Premises to the condition existing prior to the introduction of any such Hazardous Material to the Airport or Premises; provided that Lessor's approval of such actions shall first be obtained, which approval shall not, except in an emergency, be unreasonably withheld so long as such actions would not potentially have any material adverse long-term effect on the Airport and Lessee is not under administrative or court order related to such remediation action. Notwithstanding Lessor's approval pursuant to this Section 14.5, Lessor is not responsible for directing or managing any remediation action. For purposes of this Section 14.5, the term "Release" means any releasing, spilling, leaking, pumping, pouring, emitting, emptying, discharging, injecting, escaping, leaching, disposing, or dumping. This Section 14.5 also applies to Lessee's remediation of any contamination of any kind existing on the Premises or Airport prior to the Effective Date, including any such contamination that may be first discovered after the Effective Date but not caused by Lessee, except and only to the extent known contamination is exacerbated by Lessee or unknown contamination is exacerbated by Lessee's negligence.

14.6 Governmental Submittals. Lessee shall, at Lessee's own expense, make all submissions to, provide all information to, and comply with all requirements of the appropriate governmental authority ("Government") under the Environmental Laws. Should the Government determine that a site characterization, site assessment and/or cleanup plan should be prepared and/or that a cleanup should be

undertaken because of any spills or discharges of Hazardous Material by reasons of Lessee's activities or actions at the Airport which occur during the Term of this Lease, then Lessee shall, at the Lessee's own expense, prepare and submit the required plans and financial assurances, and carry out the approved plans.

14.7 Information Sharing. Lessee shall immediately notify Lessor of any of the following: (i) Lessee's receipt of any notification from any governmental entity either charging or informing Lessee that it will be charged with a significant violation of Environmental Law (as defined below), and (ii) any significant change in Lessee's activities on the Premises that is reasonably likely to adversely change Lessee's obligations or liabilities under the Environmental Laws. In addition, Lessee agrees to provide Lessor with non-privileged copies of documents reflecting the physical condition of the Premises, including but not limited to, environmental testing of soils and groundwater, and existing, non-privileged information reasonably requested by Lessor to determine the applicability of the Environmental Laws to the Premises, or to assist in the response to any governmental investigation or claim of liability by third parties which is related to environmental contamination of the Premises, to the extent that such investigations or claims are related to Lessee's activities thereon. A "significant violation of Environmental Law" shall be any violation that requires more than One Hundred Eighty (180) calendar days to resolve.

14.8 Reserved.

14.9 Actions of Lessee. The activities or actions of Lessee under this Section 14 shall include the activities or actions of Lessee's officers, directors, employees, agents, contractors, invitees and successors.

14.10 Clean Water Act; NPDES Permits and SWPPPs. Without in any way limiting the foregoing, Lessee shall comply with all Environmental Laws regarding discharges to water and land, including, without limitation, obtaining and complying with an individual National Pollutant Discharge Elimination System (NPDES) permit, or requesting coverage under and complying with any applicable Multi-Sector General Permit ("MSGP"). If applicable, Lessee shall also prepare and comply with a site-specific MSGP with an individual Storm Water Pollution Prevention Plan ("SWPPP") or any revisions to a SWPPP, with respect to Lessee's operations or activities on the Premises or Airport. Proof of individual compliance shall be provided in the form of both the Lessee's Notice of Intent ("NOI") that has been received by the Arizona Department of Environmental Quality ("ADEQ") and the individual Arizona Multi-Sector General Permit (AZMSGP) number associated with the NOI, within the times prescribed by law.

14.11 Protective Devices and Plans. If Lessee is required by the City to estimate the possible constituents of sanitary sewer discharges in order that the City may define certain discharge limitations for the Premises, Lessee shall complete and return an *Industrial Wastewater Discharge Questionnaire* ("Questionnaire") to the City and promptly provide Lessor with updates to the Questionnaire as they arise. Also, if the City so requires, Lessee shall install and maintain appropriate protective devices to prevent accidental discharge of any Hazardous Material into domestic or industrial drains on or near the Premises and elsewhere on the Airport, as appropriate, and for any other material for which a slug load discharge could pollute the Airport's storm water discharge or disrupt operations at the sewage treatment plant serving the Premises. Lessee shall post a notice in a prominent place on the Premises advising employees what actions to take and whom to call in the event of said discharge, and shall ensure that all employees of Lessee are trained with regard to the spill protection plan hereinafter referenced. Lessee also shall provide Lessor with immediate notice of any spill.

14.12 Right to Enter Premises. In addition to the rights afforded to Lessor in Section 19 this Lease specifically includes the right of the United States Government, the Environmental Protection Agency (the EPA), ADEQ, Lessor, and the Arizona Department of Occupational Safety and Health (ADOSH) to enter the Premises upon reasonable notice to Lessee for purposes of: (i) inspecting Lessee's compliance with environmental, occupational safety and health laws and regulations, whether or not such party is responsible for enforcing such laws; (ii) conducting environmental investigation or remediation, including, without limitation, performing tests and surveys, drillings, test-pitting, borings, compiling data and/or records, and other activities related to environmental investigation; and (iii) carrying out remedial or removal actions as required or necessary under applicable laws, including, without limitation, installing monitoring wells, pumping

wells and/or treatment facilities. Lessee shall have no claim against Lessor for any entries by the United States, EPA, ADEQ, Arizona ADOSH, or any officer, agent, employee or contractor thereof.

14.13 U.S. Air Force Use and Remedial Action.

14.13.1 The Parties assume no liability or responsibility for environmental impacts and Environmental Damages or claims of any kind whatsoever caused by or resulting from the U.S. Air Force's use of Hazardous Material on any portion of the Airport, including the Premises, prior to the Effective Date, and have no obligation under this Lease to undertake the defense of any claim or action, whether in existence now or brought in the future, solely arising out of the use of or release of any Hazardous Material or deposits of solid waste on or from any part of the Airport, including, but not limited to, the Premises, even if such claims or contamination are first discovered or made after the Effective Date. Further, the Parties have no obligation under this Lease to undertake environmental response, remediation, or cleanup relating to any contamination caused by or related to such use or release. For purposes of this Section 14.14, "defense" or "environmental response, remediation, or cleanup" shall include liability and responsibility for the costs of damage, penalties, legal and investigative services relating to such use or release. The terms, "Occupation" or "Use" shall mean any activity or presence (in or upon) such portion of, or such building, facility or other improvement on the Premises.

14.13.2 Pursuant to Section VII.E.3 of the Deed (as defined herein), the U.S. Air Force warrants and covenants that all remedial action necessary to protect human health and the environment with respect to hazardous substances remaining on the Airport, including the Premises, has been completed prior to the date of the Deed and, further, any remedial action found to be necessary after the date of the Deed shall be conducted by the U.S. Air Force; provided, however, that the foregoing covenant does not apply where Lessor or Lessee is a potentially responsible party with respect to any portion of the Premises or the Airport.

14.14 Cleanup Requirements. Lessee agrees that Lessor assumes no liability to Lessee should Hazardous Material cleanup or related requirements, whether imposed by law, regulatory agencies, the U.S. Air Force or Department of Defense cause delays or interferes with Lessee's use of the Premises. Lessee shall have no claim against Lessor or the United States or any officer, agent, employee or contractor thereof on account of any such interference whether due to entry, performance of remedial or removal investigations, or exercise of any right with respect to the Federal Facilities Agreement (FFA) or the Installation Restoration Program (IRP) or under this Lease or otherwise. Lessee agrees to comply with the provisions of any health or safety plan in effect under the IRP or any hazardous substance remediation or response agreement with environmental regulatory authorities during the course of any of the above described response or remedial actions. Any inspection, survey, investigation, or other response or remedial action conducted by Governmental Authorities or Lessor shall, to the extent practicable, be coordinated with representatives designated by Lessee.

14.15 Spill Protection Plan. In the event Lessee undertakes any type of manufacturing, maintenance or other activities on the Premises involving the use or generation of any Hazardous Materials regulated by Hazardous Materials Laws, Lessee shall have an approved plan for responding to Hazardous Materials, fuel, and other chemical spills prior to commencement of activities on the Premises and other approved Airport locations. Such plan shall comply with all applicable requirements of said plan which shall be updated from time to time or as may be required to comply with changes in site conditions or applicable requirements, and shall be approved by all agencies having regulatory jurisdiction over such plan. Such plan shall be independent of Lessor's spill prevention and response plans, if any. Lessee shall not rely on use of Lessor or Lessor personnel or equipment in execution of its plan. Lessee shall file a copy of the approved plan and approved amendments thereto with Lessor's Environmental and Archeological Coordinator within Thirty (30) calendar days of receipt of a Certificate of Occupancy from the City. Notwithstanding the foregoing, should Lessor provide any personnel or equipment, whether for initial fire response and/or spill containment, on the request of Lessee, or because Lessee was not, in the opinion of Lessor, conducting fire-fighting, containment or timely cleanup actions, Lessee agrees to reimburse Lessor for its actual costs in accordance with all applicable laws and regulations.

14.16 Wells. Lessee shall not install any drinking water or other wells in any location on the Premises without the prior written approval of Lessor.

14.17 Surface Disturbances. After construction of Lessee's improvements on the Premises, if any, either in the future or as otherwise provided herein, Lessee shall not conduct any subsurface excavation, digging, drilling or other disturbance of the surface other than what is usual and customary for the anticipated uses without the prior written approval of Lessor, which shall not be unreasonably withheld, conditioned or delayed.

14.18 Later Discovered Hazmat. If any Hazardous Material is newly discovered on a portion of the Property after the Effective Date that: (a) (i) were not placed on or introduced to the Property by Lessee, and (ii) were present on the Premises prior to the Effective Date (collectively, "Later-Discovered, Pre-Existing Hazmat"); and (b) such Later-Discovered, Pre-Existing Hazmat will cause Unavoidable Delay in the construction of Improvements; Lessee shall immediately notify Lessor and cease development activity in the impacted area of the Premises, and Lessee shall have the right to either (a) conduct such investigations and remedial actions as necessary under applicable Environmental Law and continue development activity as the remedial process allows (and reserve any rights it may have to seek whatever compensation it is entitled to recover), if Lessor does not agree, within Seven (7) business days of receiving notice contemplated under this Section, to promptly investigate and remediate the detected contamination in accordance with Environmental Law, and on a schedule and in a manner that does not interfere with Lessee's development, use or construction plans, or (b) terminate this Lease upon written notice to Lessor.

15. PROTECTION OF WETLANDS

Lessee shall minimize the destruction, loss, or degradation of any wetlands located on the Premises. Lessor believes there are no wetlands existing on the Premises as of the Effective Date. However, before locating new construction in wetlands, if any exist, Lessee shall contact Lessor and the United States Army Corps of Engineers and obtain a permit or waivers under Section 404 of the *Clean Water Act*. For purposes of this Section 15, the term, "new construction," includes structures, facilities, draining, dredging, channeling, filling, diking, impounding, and related activities.

16. SPECIAL PROVISIONS

16.1 Lessee shall comply with all applicable Federal, State, and local occupational safety and health regulations.

16.2 Lessee shall be responsible for determining whether it is subject to State and local sanitation, licensing, building code or building permit requirements and whether or not it requires a permit to do business and for compliance with them to the extent they are applicable.

16.3 Lessee agrees to and shall at all times comply with the Lessor's *Standard Terms and Conditions*, as attached hereto as **EXHIBIT F**.

17. INSURANCE

17.1 Coverage Required. Lessee shall procure and maintain, or cause to be procured and maintained, the following types and amounts of insurance with respect to the Premises:

17.1.1 *Comprehensive General Liability* insurance in the amount of $2,000,000 per occurrence covering third party bodily injury and property damage, including coverage for "premises/operations," "products and completed operations," "professional," "host liquor" and "blanket contractual liabilities."

17.1.2 *Personal Property* insurance providing coverage at least as broad as the current ISO Special Form ("all-risks") policy in the amount not less than the full insurable replacement cost of all of Lessee's trade fixtures and other personal property within the Premises covering at least Twelve (12) months loss of income from Lessee's business in the Premises.

17.1.3 *Worker's Compensation* insurance, as required by law, and *Employer's Liability* insurance in the amount of $1,000,000 covering work-related injuries to employees and others permitted to operate or otherwise conduct business on the Premises.

17.2 Form. Each insurance policy obtained pursuant to this Section, except for *Worker's Compensation* and *Employer's Liability* policies, shall: (i) name Lessor as a certificate holder and additional named insured via endorsement; (ii) contain a provision that written notice of cancellation or modification thereof shall be given to Lessor not less than Thirty (30) calendar days before such cancellation or modification takes effect (Ten (10) calendar days in case of nonpayment of premium); and (iii) contain a waiver of subrogation in favor of Lessor. Lessee shall not permit any insurance policy to be canceled or modified without Lessor's written consent unless equivalent replacement policies are issued with no lapse in coverage. All policies shall be obtained from insurance companies licensed to do business in the State of Arizona and possessing a rating of at least A – VII or higher from the A.M. Best Company, or an equivalent rating and approved by Lessor.

17.3 Certificates of Insurance. Lessee shall deliver a certificate of insurance for each policy required herein to Lessor, in standard Acord or equivalent form, prior to the Effective Date and shall continue to provide such certificates throughout the term of this Lease.

17.4 Additional Insurance. At any time during the term of this Lease, Lessor may, if in its reasonable determination the insurance coverage required by this Section 17 is no longer adequate, require Lessee to increase its coverage to commercially reasonable amounts.

17.5 Blanket Insurance. Lessee's insurance obligations under this Lease may be satisfied by means of "blanket" or excess policies.

17.6 Insurance by Lessor. In the event Lessee shall fail to procure any insurance required hereunder, Lessor may, upon written notice to Lessee, procure and maintain any or all of the insurance required of Lessee under this Section. In such event, all costs of such insurance procured and maintained by Lessor on behalf of Lessee shall be the responsibility of Lessee and shall be fully reimbursed to Lessor within Ten (10) business days after Lessor advises Lessee of the cost thereof.

18. SURRENDER OF POSSESSION.

18.1 Condition of Property.

18.1.1 Upon the expiration or earlier termination of this Lease, Lessee's right to occupy the Premises and exercise the privileges and rights granted thereunder shall cease, and Lessee shall peaceably surrender the same and leave the Premises broom clean and in good condition except for normal wear and tear. All trade fixtures, equipment, and other personal property, to include all hazardous material, installed or placed by Lessee on the Premises which are not permanently affixed thereto shall remain the property of Lessee, and Lessee shall have the right at any time during the term of this Lease, to remove the same from the Airport and Lessee shall repair, at its sole cost, any damage caused by such removal. Any property not removed by Lessee within Fifteen (15) calendar days of the expiration or earlier termination of this Lease, or revocation of Lessee's right to occupy the Premises, shall become a part of the Premises, and ownership thereof shall vest in Lessor. Lessee shall, however, remain financially liable to Lessor for removal and disposal of any hazardous materials and the cost of repairs to the Premises incurred as a result of Lessor's removal and/or relocation of property formerly belonging to Lessee and not otherwise removed from the Premises, as provided herein, and shall remit to Lessor payment for such costs within Ten (10) business days of Lessee's receipt of Lessor's invoice therefor.

18.1.2 Any trade fixtures, equipment or other property affixed to the Premises by Lessee shall, if required by Lessor, be permanently removed from the Premises by Lessee, at Lessee's expense, within Five (5) business days of Lease termination. Should Lessee fail to remove such trade fixtures, equipment or other property within said time, Lessor may remove and dispose of such trade fixtures, equipment or other property at Lessee's expense, and Lessee shall reimburse Lessor for the costs thereof within Ten (10) business days of receipt of Lessor's invoice therefor.

18.2 Holding Over. Lessee shall not remain in possession of the Premises after the expiration or earlier termination of the Term without the express written consent of Lessor. Should Lessee hold over without the express written consent of Lessor, such tenancy shall be at the sufferance of Lessor and not a renewal of the Term. In such case, the Base Rent and all other charges due pursuant to this Lease shall be payable at One Hundred Fifty Percent (150%) of the amount payable during the last year of the Term, and such tenancy at sufferance shall be subject to every other term, covenant and provision of this Lease. In the event Lessee holds over, Lessee shall be liable for all of Lessor's direct and consequential damages, which shall include, without limitation, costs, fees, expenses, damages and attorneys' fees incurred by Lessor as a result of Lessee's holding over, and damages and expenses incurred by Lessor for its inability to deliver possession of the Premises to a new lessee.

19. INSPECTION BY LESSOR

Lessor may enter upon the Premises at reasonable times and upon reasonable notice for any reasonable purpose, including, but not limited to, compliance with the terms and conditions of this Lease and the exercise of its governmental functions for such activities as fire protection or security.

20. NOTICES

20.1 All notices required or permitted under this Lease shall not be effective unless personally delivered or mailed by certified mail, return receipt requested, postage prepaid, or by reputable commercial overnight courier service, to the following addresses:

TO LESSOR: Phoenix-Mesa Gateway Airport Authority
Attn: Business Development Department
5835 South Sossaman Road
Mesa, Arizona 85212

TO LESSEE: Trident Military Systems, LLC
Attn.: Milt Miller Owner
6030 S. Kent St., Ste. 561
Mesa, AZ 85212

20.2 Any notice shall be deemed to have been received Two (2) business days after the date of mailing, if given by certified mail, or upon actual receipt if personally delivered or if given by reputable commercial overnight courier service. Any Party may designate in writing a different address for notice purposes pursuant to this Section.

21. SEVERABILITY

The provisions of this Contract are severable to the extent that any provision or application held to be invalid shall not affect any other provision or application of the Contract, which may remain in effect without the valid provision, or application.

22. SALES AND PROPERTY TAXES

Lessee shall pay any leasehold tax, sales tax, personal property tax, transaction privilege tax, license or permit fee, or any other tax assessed as the result of its occupancy of Premises or conduct of any activity at the Airport under authority of this Lease, including any such tax assessable on Lessor. In the event that laws or judicial decisions result in the imposition of a real property tax or any other form of tax or imposition on the interest of Lessor, such tax shall also be paid by Lessee for the period this Lease is in effect, to the extent such taxes are reasonably attributable to the Premises or a portion thereof or the operation of Lessee's business.

23. APPROVALS, CONSENTS AND NOTICES

All approvals, consents and notices called for in this Lease shall be in writing, signed by the appropriate Party, and may not be established solely by oral testimony.

24. LIENS AND MORTGAGES

24.1 General Provisions.

24.1.1 Except as provided in this Section 24, Lessee shall not engage in any financing or other transaction creating any mortgage or deed of trust upon the Premises, place or suffer to be placed upon the Premises any lien or other encumbrance, or suffer any levy or attachment to be made on Lessee's interest in the Premises. Any such mortgage or deed of trust, encumbrance or lien shall be deemed a violation of this Section, constituting a failure by Lessee to comply with the terms of the Lease, on the date of its execution or filing of record regardless of whether or when it is foreclosed or otherwise enforced.

24.1.2 Notwithstanding anything to the contrary in Section 9 herein, Lessee shall, during the Term, be permitted to mortgage, collaterally assign, or otherwise encumber its leasehold interest under this Lease to secure indebtedness, including, without limitation, a loan to finance construction of improvements and other development on the Premises, and including refinancing's thereof, subject to the restrictions of Section 24.1.3, and provided that the language of such mortgage or deed of trust and of all related documents that require the execution, approval, or consent of Lessor shall be subject to the prior review and approval of legal counsel for Lessor, and that all legal fees incurred by Lessor in connection with such legal counsel review and approval shall be paid by Lessee. Any such encumbrance is referred to as "Mortgage" and the holder thereof, "Mortgagee." The Mortgagee, upon taking possession or upon foreclosure or taking an assignment in lieu thereof, shall be liable for all future rents and obligations hereunder and shall attorn to Lessor. No Mortgage shall encumber Lessor's interest in the Premises or the improvements thereon. Further and promptly after Lessee assigns or encumbers any portion of the Premises or the improvements thereon, Lessee shall furnish Lessor with a written notice setting forth the name and address of such Mortgagee or trustee.

24.1.3 No Mortgage or deed of trust shall extend to or affect the fee, the reversionary interest or the estate of Lessor in the Premises. No Mortgage or deed of trust shall be binding upon Lessor in the enforcement of its rights and remedies under this Lease and by law provided, unless and until a copy thereof shall have been delivered to Lessor and such Mortgage or deed of trust is authorized in accordance with provisions of this Section 24.

24.2 Lessor Agreement. With respect to Mortgagees of the Premises, Lessor agrees that:

24.2.1 If requested by a Mortgagee which shall have duly registered in writing with Lessor its name and address, and if Lessor shall give any notice, demand, election or other communication required hereunder (hereafter, collectively, "Notices") to Lessee, Lessor shall concurrently give a copy of each such Notice to the Mortgagee at the address designated by it. Notices shall be sent by registered or certified mail, return receipt requested, and shall be deemed given Seventy-Two (72) hours after the time they are deposited in a United States Post Office with postage charges prepaid, addressed to the Mortgagee. No Notice given by Lessor to Lessee shall be binding upon or affect Lessee or the Mortgagee unless a copy of the Notice shall be given to the Mortgagee pursuant to this Section 24.2.1.

24.2.2 Such Mortgagee entitled to such Notices, as specified above, shall have any and all rights of Lessee with respect to the curing of any default hereunder by Lessee.

24.2.3 If Lessor shall elect to terminate this Lease by reason of any default by Lessee with respect to the Premises, the Mortgagee that shall have become entitled to Notice as provided in this Section 24.2 shall have any and all rights of Lessee with respect to curing of any default with respect to the Premises.

24.2.4 Nothing herein contained shall be deemed to impose any obligation on the part of Lessor to deliver physical possession of the Premises to such holder of a Mortgage. To the extent the physical possession of the Premises by a secured creditor is not inconsistent with the terms of this Lease, or is incompatible with the Lessor's selection of available remedies in the Event of Default, Lessor shall not prevent such physical possession.

24.2.5 If more than one Mortgagee shall seek to exercise any of the rights provided for in this Section 24, the holder of the Mortgage having priority of lien over the other Mortgagees shall be entitled,

as against the others, to exercise such rights. Should a dispute arise among Mortgagees regarding the priority of lien, the Mortgagees shall prove to the satisfaction of Lessor that they have settled that dispute.

24.3 Protection of Mortgagee(s). Until the time, if any, that an approved Mortgage shall be satisfied and released of record:

24.3.1 A Mortgagee shall have the right, for a period equal to the period afforded Lessee to perform any term, covenant, or condition and to remedy any default by Lessee hereunder, and Lessor shall accept such performance with the same force and effect as if furnished by Lessee, and the Mortgagee shall thereby and hereby be subrogated to the rights of Lessor. Such Mortgagee cure period shall begin on the later of: (i) the date Mortgagee receives notice pursuant to Section 24.2, or (ii) the date that Lessee's cure period expires under the Lease. During such Mortgagee cure period, Lessor will not disturb possession, interest or quiet enjoyment by the Lessee or Mortgagee in the real property for any reason, subject to the terms of the Lease, until such Mortgagee cure period has expired. The Mortgagee shall have the right to enter upon the Premises to give such performance.

24.3.2 In case of a default by Lessee in the performance or observance of any non-monetary term, covenant or condition to be performed by it hereunder, if such default cannot practicably be cured by the Mortgagee without taking possession of the Premises, in such Mortgagee's reasonable opinion, or if such default is not susceptible of being cured by the Mortgagee, then Lessor shall not serve a notice of lease termination if and so long as:

a. The Mortgagee shall proceed diligently to obtain possession of the Premises (including possession by a receiver), and, upon obtaining such possession, shall proceed diligently to cure such defaults as are reasonably susceptible of cure (subject to any order by a court of competent jurisdiction staying or otherwise precluding such Mortgagee from obtaining such possession); or

b. The Mortgagee shall institute foreclosure proceedings and diligently prosecute the same to completion (unless in the meantime it shall acquire Lessee's estate hereunder, either in its own name or through a nominee, by assignment in lieu of foreclosure), subject to any order by a court of competent jurisdiction staying or otherwise precluding such Mortgagee from obtaining such possession.

c. The Mortgagee shall not be required to obtain possession or to continue in possession of the Premises pursuant to Section 24.3.2a, or to continue to prosecute foreclosure proceedings pursuant to Section 24.3.2b, if and when such default shall be cured. If a Mortgagee, its nominee, or a purchaser at a foreclosure sale shall acquire title to Lessee's leasehold estate hereunder, a default that is not reasonably susceptible to cure by the person succeeding to the leasehold interest shall no longer be deemed a default under this Lease.

d. If any Mortgagee is prohibited from commencing or prosecuting foreclosure or other appropriate proceedings in the nature thereof by any process or injunction issued by any court, or by reason of any action by any court having jurisdiction of any bankruptcy or insolvency proceeding involving Lessee, the times for commencing or prosecuting foreclosure or other proceedings, including proceedings to obtain possession, shall be extended for the period of the prohibition.

24.4 New Lease.

24.4.1 Subject to FAA regulations, Lessor agrees that, in the event of early termination of this Lease for any reason (including but not limited to any default by Lessee), Lessor, if requested by any Mortgagee, will enter into a new lease of the Premises with the most senior Mortgagee requesting a new lease, which new lease shall commence as of the date of termination of this Lease and shall run for the remainder of the original term of this Lease, at the rent and upon the terms, covenants and conditions herein contained, provided that:

a. Such Mortgagee shall make written request upon Lessor for the new lease within Sixty (60) calendar days after the date such Mortgagee receives written notice from Lessor that this Lease has been terminated;

b. Such Mortgagee shall pay to Lessor, at the time of the execution and delivery of the new lease, any and all sums which would, at that time, be due and unpaid pursuant to this Lease but for its termination, and in addition thereto all reasonable expenses, including reasonable attorneys' fees, which Lessor shall have incurred by reason of such termination;

c. Such Mortgagee shall perform and observe all covenants in this Lease to be performed and observed by Lessee, and shall further remedy any other conditions which Lessee under the Lease was obligated to perform under its terms, to the extent the same are reasonably susceptible of being cured by the Mortgagee; and

d. The Lessee under the new lease shall have the same right of occupancy to the buildings and improvements on the Premises and elsewhere on the Airport as Lessee had under this Lease immediately prior to its termination.

Notwithstanding anything to the contrary expressed or implied in this Lease, any new lease made pursuant to this Section 24 shall have the same priority as this Lease with respect to any mortgage, deed of trust, or other lien, charge, or encumbrance on the fee of the Premises, and any sublease under this Lease shall be a sublease under the new Lease and shall not be deemed to have been terminated by the termination of this Lease.

24.4.2 Nothing herein contained shall require any Mortgagee to enter into a new lease pursuant to this Section 24.4, or to cure any default of Lessee referred to above.

24.4.3 If any Mortgagee shall request a new lease as provided in this Section 24.4, Lessor agrees, at the request of, on behalf of and at the expense of the Mortgagee, upon a guaranty from it reasonably satisfactory to Lessor, to institute and pursue diligently to conclusion the appropriate legal remedy or remedies to oust or remove the original Lessee from the Premises, but not any authorized subtenants actually occupying the Premises or any part thereof.

24.4.4 Unless and until Lessor has received notice from each Mortgagee that the Mortgagee elects not to demand a new lease as provided herein, or until the period therefor has expired, Lessor shall not cancel or agree to the termination or surrender of any existing subleases nor enter into any new leases or subleases with respect to the Premises without the prior written consent of each Mortgagee.

24.5 Effect of Transfer. Neither the foreclosure of any Mortgage (whether by judicial proceedings or by virtue of any power of sale contained in the Mortgage), nor any conveyance of the leasehold estate created by this Lease by Lessee to any Mortgagee or its designee by an assignment or deed in lieu of foreclosure or other similar instrument, shall require the consent of Lessor or constitute a default under this Lease, and upon such foreclosure, sale or conveyance, Lessor shall recognize the purchaser or other transferee in connection therewith as the Lessee under this Lease, subject only to an assumption in writing by such purchaser or transferee of all obligations of Lessee under this Lease.

25. GOVERNING LAW

The laws of the State of Arizona shall govern the matters set forth in this Lease. Venue of any action brought under this Lease shall, at the option of Lessor, lie in Maricopa County, Arizona.

26. RULES AND REGULATIONS

Lessee shall at all times comply with all Federal, state and local laws, ordinances, rules, and regulations which are applicable to its activities on the Airport, the Premises itself (including but not limited to the *Americans with Disabilities Act, Public Law 101-336, 42 U.S.C. 12101-12213*), or the operation, management, maintenance, or administration of the Airport, including all laws, ordinances, rules and regulations adopted after the Effective Date. Lessee shall at all times comply with the *Airport Minimum Standards* and *Airport Rules and Regulations*, as the same may be amended from time to time. Copies of the current *Airport Minimum Standards* and *Airport Rules and Regulations* are attached hereto as **EXHIBIT D**. Lessee acknowledges and agrees that Lessor may amend the *Airport Minimum Standards* and *Airport Rules and Regulations* at any time in Lessor's sole discretion. Lessee shall be responsible for controlling and preventing disruptive pedestrian and vehicle traffic associated with its

activities on the Premises and at the Airport. Lessee also shall display to Lessor any permits, licenses, or other evidence of compliance with laws upon request.

27. CORPORATE AUTHORIZATION

In executing this Agreement, Lessee represents and warrants to Lessor that if Lessee is a corporation, Lessee has obtained and been granted the full right, power and authority to enter into this Lease.

28. UTILITY LINES AND SERVICE CHARGES

28.1 Lessor shall pay for electric, gas, water and sewage currently placed at the Premises.

28.2 Lessee shall pay for all telecommunications, refuse, and custodial services, plus any other utilities and services necessary for their operation at the Premises not listed in Section 28.1. The charges and method of payment for each utility or service shall be determined by the appropriate supplier of the utility or service in accordance with applicable laws and regulations, on such basis as the appropriate supplier of the utility or service may establish.

28.3 Lessee shall, at no cost or expense to Lessor, provide or arrange for any additional public utility, water and sewage lines, and telecommunications connections and services that are needed in connection with any building(s), structure(s) or other improvement(s) placed on the Premises by Lessee, or required for Lessee's activities thereon, and shall be responsible for the maintenance of such lines and connections from where they enter the Premises. If requested in advance to do so by Lessee, Lessor will grant reasonable rights-of-way on or across the Airport to suppliers of public utility services for the purpose of supplying Lessee with such services, but Lessor reserves the right to designate the lands along which such rights-of-way shall be granted so as to cause the least inconvenience in the operation of the Airport and other Airport tenants.

28.4 Notwithstanding the execution of this Lease, Lessor retains the right to the continued use of such utility lines and services as are presently on the Premises and the right to repair the same when necessary in Lessor's sole discretion, including but not limited to, any utility easements on the Premises. Lessor shall conduct such repairs in such a manner and at such times as to not unreasonably interfere with Lessee's activities thereon.

29. RESERVATIONS TO LESSOR

The Premises are accepted "as is, where is" by Lessee, subject to any and all existing easements or other encumbrances, and Lessor shall have the right to install, lay, construct, maintain, repair and operate such sanitary sewers, drains, storm water sewers, pipelines, manholes, connections; water, oil and gas pipelines; telephone and telegraph power lines; and such other appliances and appurtenances necessary or convenient to use in connection therewith, over, on, across or in proximity to the Premises, or any part thereof, as will not unreasonably interfere with Lessee's or any subtenant's operations hereunder, and to enter upon the Premises for such purposes. Lessor also reserves the right to grant franchises, easements, rights-of-way, and permits, over, on, across or in proximity to any portions of the Premises for the same purposes; provided, that Lessor or the grantee, as applicable, shall not exercise such rights so as to interfere unreasonably with Lessee's or any subtenant's activities on the Premises and all such interference shall be minimized. Lessor agrees that any rights granted to any parties by reason of this clause shall contain provisions that the surface of the Premises shall be restored to its original condition, at no cost to Lessee, upon the completion of any construction.

30. FEDERAL AVIATION ADMINISTRATION (FAA) PROVISIONS

30.1 Lessor reserves the right to further develop or improve the landing area of the Airport as it sees fit, regardless of the desires or view of Lessee, and without interference or hindrance therefrom.

30.2 Lessor reserves the right, but shall not be obligated to Lessee, to maintain and keep in repair the landing area of the Airport and all publicly owned facilities of the Airport, together with the right to direct and control all activities of Lessee in this regard. Lessor and Lessee agree that Lessee has no responsibility

whatsoever with respect to maintenance and repair of the landing area of the Airport, or any publicly owned facilities of the Airport.

30.3 This Lease shall be subordinate to the provisions and requirements of any existing or future agreement between Lessor and the United States relative to the development, operation or maintenance of the Airport.

30.4 There is reserved unto Lessor, for the use and benefit of the public, a right of flight for the passage of aircraft in the airspace above the surface of the Premises, which shall include the right to cause in the airspace any noise inherent in the operation of aircraft, now known or hereafter used for navigation of or flight in or through the airspace, and for the use of such airspace for landing on, taking off from, or operation on the Airport.

30.5 Lessee agrees to comply with the notification and review requirements covered in 14 CFR Part 77 in the event future construction of a building is planned for the Premises or in the event of any planned modification or alteration of any present or future building or structure situated on the Premises.

30.6 Lessee shall not erect or permit the erection of any structure or building, nor permit the growth of any tree on the Premises, or any other obstruction that exceeds height requirements contained in 14 CFR Part 77 or amendments thereto, or interferes with the runway and/or taxiway "line of sight" of the control tower. In the event these covenants are breached, Lessor reserves the right to enter upon the Premises and to remove the offending structure or object at the expense of Lessee.

30.7 Lessee shall not make use of the Premises in any manner that might interfere with the landing and taking off of aircraft from the Airport or otherwise constitute a hazard. In the event this covenant is breached, Lessor reserves the right to enter upon the Premises and cause the abatement of such interference at the expense of Lessee.

30.8 Nothing contained in this Lease shall be construed to grant or authorize the granting of an exclusive right within the meaning 49 U.S.C. §40103(e) and 47107 (a)(4).

30.9 This Lease and all of the provisions hereof shall be subject to whatever right the United States government now has, or in the future may have or acquire, affecting the control, operation, regulation and taking over of the Airport, or the exclusive or non-exclusive use of the Airport by the United States during the time of war or national emergency.

30.10 To the extent that Lessee conducts or engages in any aeronautical activity for furnishing services to the public at the Airport, Lessee shall furnish its services on a reasonable and not unjustly discriminatory basis to all users and charge reasonable and not unjustly discriminatory prices for each unit or service; except, however, that Lessee may be allowed to make reasonable and nondiscriminatory discounts, rebates, or other similar type of price reductions to volume purchasers.

30.11 Lessee shall conform to Lessor and FAA safety and security rules and regulations regarding use of the Airport air operations area including runways, taxiways, taxilanes and aircraft aprons by vehicles, employees, customers, visitors, etc., in order to prevent security breaches and avoid aircraft incursions and vehicle/pedestrian deviations; complete and pass an airfield safe driving instruction program when offered or required by Lessor; and be subject to penalties as prescribed by Lessor for violations of Airport safety and security requirements.

31. TITLE VI

31.1 The tenant/Lessee and its transferee agree to comply with pertinent statues, Executive Orders and such rules as are promulgated to ensure that no person shall, on the grounds of race, creed, color or national origin, sex, age or disability be excluded from participating in any activity conducted with or benefiting from Federal assistance. Lessee understands and acknowledges that the FAA requires inclusion of and adherence to the terms and conditions of Title VI in all airport/aviation lease agreements where Lessor receives federal funding, including, Lessor in this instance.

31.2 During the performance of this contract, the tenant/lessee, for itself, its assignees, and successors in interest agrees as follows:

1. Compliance with Regulations: The tenant/lessee (hereinafter includes consultants) will comply with the Title VI List of Pertinent Nondiscrimination Acts and Authorities, as they may be amended from time to time, which are herein incorporated by reference and made a part of this contract.

2. Non-discrimination: The tenant/lessee, with regard to the work performed by it during the contract, will not discriminate on the grounds of race, color, or national origin in the selection and retention of subcontractors, including procurements of materials and leases of equipment. The tenant/lessee will not participate directly or indirectly in the discrimination prohibited by the Nondiscrimination Acts and Authorities, including employment practices when the contract covers any activity, project, or program set forth in Appendix B of 49 CFR Part 21.

3. Solicitations for Subcontracts, Including Procurements of Materials and Equipment: In all solicitations, either by competitive bidding, or negotiation made by the tenant/lessee for work to be performed under a subcontract, including procurements of materials, or leases of equipment, each potential subcontractor or supplier will be notified by the tenant/lessee of the tenant/lessee's obligations under this contract and the Non-discrimination Acts And Authorities on the grounds of race, color, or national origin.

4. Information and Reports: The tenant/lessee will provide all information and reports required by the Acts, the Regulations and directives issued pursuant thereto and will permit access to its books, records, accounts, other sources of information, and its facilities as may be determined by the sponsor or the Federal Aviation Administration to be pertinent to ascertain compliance with such Nondiscrimination Acts and Authorities and instructions. Where any information required of a tenant/lessee is in the exclusive possession of another who fails or refuses to furnish the information, the tenant/lessee will so certify to the sponsor or the Federal Aviation Administration as appropriate, and will set forth what efforts it has made to obtain the information.

5. Sanctions for Noncompliance: In the event of a tenant/lessee's noncompliance with the Nondiscrimination provisions of this contract, the Recipient will impose such contract sanctions as it or the Federal Aviation Administration may determine to be appropriate, including, but not limited to:

a. withholding payments to the tenant/lessee under the contract until the tenant/lessee complies; and/or

b. cancelling, terminating, or suspending a contract, in whole or in part.

6. Incorporation of Provisions: The tenant/lessee will include the provisions of paragraphs one through six in every subcontract, including procurements of materials and leases of equipment, unless exempt by the Acts, the Regulations and directives issued pursuant thereto. The tenant/lessee will take action with respect to any subcontract or procurement as the sponsor or the Federal Aviation Administration may direct as a means of enforcing such provisions including sanctions for noncompliance. Provided, that if the tenant/lessee becomes involved in, or is threatened with litigation by a subcontractor, or supplier because of such direction, the tenant/lessee may request the sponsor to enter into any litigation to protect the interests of the sponsor. In addition, the tenant/lessee may request the United States to enter into the litigation to protect the interests of the United States.

31.3 The Lessee for himself/herself, his/her heirs, personal representatives, successors in interest, and assigns, as a part of the consideration hereof, does hereby covenant and agree that (1) no person on the ground of race, color, or national origin, will be excluded from participation in, denied the benefits of, or be otherwise subjected to discrimination in the use of said facilities, (2) that in the construction of any improvements on, over, or under such land, and the furnishing of services thereon, no person on the ground of race, color, or national origin, will be excluded from participation in, denied the benefits of, or otherwise be subjected to discrimination, (3) that the lessee will use the premises in compliance with all other requirements imposed by or pursuant to the List of discrimination Acts And Authorities.

31.4 During the performance of this Lease, the tenant/Lessee, for itself, its assignees, and successors in interest agrees to comply with the following non-discrimination statutes and authorities; including but not limited to the following (which Lessor is required to disclose and include in such Lease and other agreements, pursuant to FAA regulation):

- Title VI of the Civil Rights Act of 1964 (42 U.S.C. § 2000d *et seq*., 78 stat. 252), (prohibits discrimination on the basis of race, color, national origin);
- 49 CFR part 21 (Non-discrimination In Federally-Assisted Programs of The Department of Transportation—Effectuation of Title VI of The Civil Rights Act of 1964);
- The Uniform Relocation Assistance and Real Property Acquisition Policies Act of 1970, (42 U.S.C. § 4601), (prohibits unfair treatment of persons displaced or whose property has been acquired because of Federal or Federal-aid programs and projects);
- Section 504 of the Rehabilitation Act of 1973, (29 U.S.C. § 794 *et seq*.), as amended, (prohibits discrimination on the basis of disability); and 49 CFR part 27;
- The Age Discrimination Act of 1975, as amended, (42 U.S.C. § 6101 *et seq*.), (prohibits discrimination on the basis of age);
- Airport and Airway Improvement Act of 1982, (49 USC § 471, Section 47123), as amended, (prohibits discrimination based on race, creed, color, national origin, or sex);
- The Civil Rights Restoration Act of 1987, (PL 100-209), (Broadened the scope, coverage and applicability of Title VI of the Civil Rights Act of 1964, The Age Discrimination Act of 1975 and Section 504 of the Rehabilitation Act of 1973, by expanding the definition of the terms "programs or activities" to include all of the programs or activities of the Federal-aid recipients, sub-recipients and contractors, whether such programs or activities are Federally funded or not);
- Titles II and III of the Americans with Disabilities Act of 1990, which prohibit discrimination on the basis of disability in the operation of public entities, public and private transportation systems, places of public accommodation, and certain testing entities (42 U.S.C. §§ 12131 – 12189) as implemented by Department of Transportation regulations at 49 CFR parts 37 and 38;
- The Federal Aviation Administration's Non-discrimination statute (49 U.S.C. § 47123) (prohibits discrimination on the basis of race, color, national origin, and sex);
- Executive Order 12898, Federal Actions to Address Environmental Justice in Minority Populations and Low-Income Populations, which ensures non-discrimination against minority populations by discouraging programs, policies, and activities with disproportionately high and adverse human health or environmental effects on minority and low-income populations;
- Executive Order 13166, Improving Access to Services for Persons with Limited English Proficiency, and resulting agency guidance, national origin discrimination includes discrimination because of limited English proficiency (LEP). To ensure compliance with Title VI, you must take reasonable steps to ensure that LEP persons have meaningful access to your programs (70 Fed. Reg. at 74087 to 74100);
- Title IX of the Education Amendments of 1972, as amended, which prohibits you from discriminating because of sex in education programs or activities (20 U.S.C. 1681 et seq).

31.5 Lessee agrees that in the event improvements are constructed, maintained, or otherwise operated on the Premises for a purpose for which a Department of Transportation (DOT) program or activity is intended, or for another purpose involving the providing of similar services or benefits, Lessee shall maintain

and operate such facilities and services in compliance with all other requirements imposed pursuant to 49 CFR Part 21, *Nondiscrimination in Federally Assisted Programs of the Department of Transportation*, as it may be amended.

32. FEDERAL FAIR LABOR STANDARDS ACT

This contract and all subcontracts that result from this contract incorporate by reference the provisions of 29 CFR part 201, the Federal Fair Labor Standards Act (FLSA), with the same force and effect as if given in full text.

The Lessee has full responsibility to monitor compliance to the referenced statue or regulation. The Lessee must address any claims or disputes that arise from this requirement directly with the U.S. Department of Labor – Wage and Hour Division.

33. OCCUPATIONAL SAFETY AND HEALTH ACT OF 1970

This contract and all subcontracts that result from this contract incorporate by reference the provisions of 29 CFR part 1910 with the same force and effect as if given in full text. Lessee must provide a work environment that is free from recognized hazards that may cause death or serious physical harm to the employee. The Lessee retains full responsibility to monitor its compliance and their subcontractor's compliance with the applicable requirements of the Occupational Safety and Health Act of 1970 (20CFR Part 1910). Lessee must address any claims or disputes that pertain to a referenced requirement directly with the U.S. Department of Labor – Occupational Safety and Health Administration

34. INCORPORATION OF QUITCLAIM DEED

Lessor owns the Airport pursuant to a Quitclaim Deed from the United States Government ("Deed"), a copy of which is available to Lessee upon request and is hereby incorporated in its entirety. To the extent the Deed has terms, conditions, obligations, requirements or restrictions that apply to this Lease, Lessor, Lessee or any matter in connection herewith, Lessee agrees to be bound by all the terms, covenants and conditions of the Deed, including the following:

34.1 That this Lease is subject to all terms and conditions of the Deed; and

34.2 That in case of any conflict between the Deed and this Lease, the Deed shall control.

35. REQUIRED PROVISIONS OF QUITCLAIM DEED

35.1 Section VI (A)(5)(c) of the Deed requires that the following provisions be included in this Lease:

35.1.1 In furnishing services to the public, Lessee shall not discriminate against any person or class of persons by reason of race, color, creed, or national origin, and Lessee shall otherwise provide such services on a fair, equal, and not unjustly discriminatory basis to all users thereof.

35.1.2 Lessee shall charge fair, reasonable, and not unjustly discriminatory prices for each unit for service; except, however, that the Lessee may be allowed to make reasonable and nondiscriminatory discounts, rebates, or other similar types of price reductions to volume purchasers.

35.2 If the Premises are within any of the archaeological sites identified in Section VIII.A of the Deed, then, the provisions of Section VIII of the Deed shall be deemed incorporated in this Lease by this express reference to Section VIII of the Deed.

35.3 To the extent the Deed requires that other specific provisions thereof be inserted in this Lease by express reference to the Deed, this sentence shall constitute an express reference to all such applicable provisions of the Deed.

36. ARCHEOLOGICAL OR CULTURAL RESOURCES

In the event any archeological or cultural resources are discovered during any construction contemplated or permitted by this Lease, Lessor shall use its best efforts to expedite any necessary actions with respect thereto, at Lessor's sole cost and expense; provided, however, that in the event the necessary actions with respect to any archeological or cultural resources exceeds or is estimated to exceed $10,000.00, Lessee shall be entitled to terminate this Lease upon Ten (10) business days' prior written notice to Lessor.

37. AIRPORT SECURITY

37.1 PMGAA Operations Department maintains an approved Airport Security Plan (the "Security Plan") pursuant to 49 CFR Parts 1540 and 1542, and 14 CFR Part 139. Lessee shall at all times comply with PMGAA Operations Department security directives, security bulletins, or verbal notifications existing now or in the future.

37.1.1 Lessee is responsible for maintaining security practices, facilities, and perimeter boundaries on their leasehold that meet the security standards set forth by PMGAA Operations Department.

37.1.2 Lessee shall immediately correct physical or procedural deficiencies which are contrary to PMGAA Operations Department, security directives, security bulletins, or verbal notifications existing now or in the future.

37.1.3 Lessee shall, to the fullest extent permitted by law, indemnify, defend and hold PMGAA harmless for, from and against any security violation committed by any agents, employees, invitees, subcontractors, sub-lessees or independent contractors of Lessee.

37.1.4 Lessee shall conduct and document all self-audits and self-inspections as required by TSA or Airport Operations and make such audits available for inspection.

37.1.5 Lessee shall designate a primary security coordinator to receive security related briefings, bulletins and sensitive security information.

37.1.6 PMGAA reserves the right to modify the Security Plan from time to time, as necessary or as directed by TSA. PMGAA Airport Operations shall notify the Lessee security coordinator regarding modifications that effect Lessee.

37.2 Airport Security Badge.

37.2.1 Lessee employees/contractors that require a Badge shall be obligated to complete all training and comply with all security requirements and directives issued by PMGAA Airport Operations, Transportation Security Administration or other entity having security jurisdiction at PMGAA. Lessee, employees, and contractors will surrender security badges upon request by Airport Operations; physical security media (badges and keys) remain the property of PMGAA.

37.2.2 Lessee, employees and contractors shall comply with all security related audits, inspections, and screenings conducted by the PMGAA Airport Operations Department

37.2.3 Lessee will immediately return badges to the Airport Badging office when badge holders' employment is terminated, the badge is no longer needed, or the employee/contractor is on extended leave.

37.2.4 Misuse of a Badge or security procedures will bring about punitive action including suspension or revocation of one or all badges.

38. DEFAULT BY LESSOR

In the event of any alleged breach by Lessor of its covenants contained in this Lease, Lessee shall have available all rights and remedies provided at law or in equity, subject to the terms and conditions of this Lease; provided, however, Lessee may not exercise any such right or remedy unless Lessee has notified Lessor by

written notice of such alleged default, and Lessor has not cured such default within the Thirty (30) calendar day period subsequent to receipt of such notice or, in the event such alleged default is of such a nature that it cannot reasonably be cured within such Thirty (30) calendar day period, Lessor has failed to cure such alleged default with all due diligence. Notwithstanding anything to the contrary contained in this Lease, in no event shall Lessee be entitled to terminate this Lease or abate or offset any installment of Base Rent, or any other payments to be made by Lessee hereunder.

39. BROKERS

Lessee represents and warrants that it has not had any dealings with any real estate brokers, finders or agents in connection with this Lease. Lessee further agrees to indemnify, defend (with counsel selected by Lessor) and hold Lessor and Lessor's nominees, successors and assigns harmless from any and all claims, costs, commissions, fees or damages by any person or firm whom Lessee authorized or employed, or acted by implication to authorize or employ, to act for Lessee in connection with this Lease.

40. SALE BY LESSOR

Lessee agrees to look solely to Lessor's interest in the Premises for the recovery of any judgment from Lessor, it being agreed that neither Lessor nor the holders of the equity interests of Lessor, nor the members, partners, officers, directors or shareholders of Lessor shall be personally liable for any such judgment. In the event of any sale or other conveyance by Lessor of its interest in the Premises, Lessor shall be automatically freed and released from all personal liability accruing from and after the date of such sale or conveyance as respects the performance of any covenant or obligation on the part of Lessor contained in this Lease to be performed, it being intended hereby that the covenants and obligations contained in this Lease on the part of Lessor shall be binding on the Lessor and its successors and assigns only during and in respect to the respective successive periods of ownership of the Premises.

41. ESTOPPEL CERTIFICATE

Lessee shall, without charge, at any time and from time to time hereafter, within Ten (10) business days after written request of Lessor to do so, certify, by written instrument duly executed and acknowledged by Lessee and certified to Lessor and to any prospective lender or purchaser: (i) as to whether this Lease has been supplemented or amended, and if so, the substance and manner of such supplement or amendment; (ii) as to the existence of any default hereunder to the best of Lessee's knowledge; (iii) as to the date on which Lessee was obligated to commence paying Base Rent and all other charges hereunder and the expiration date of the Term; (iv) as to whether the Lessee has assigned or transferred its interests or any portion thereof in this Lease; and (v) as to any other matters as may be reasonably requested. Lessor and any prospective purchaser or lender to whom the same was certified may rely upon any such certificate.

42. MISCELLANEOUS

42.1 Personal Liability. No member of or employee of either Party shall be charged personally or held contractually liable by or to the other Party under any term or provision of this Lease because of any breach thereof, or because of its execution or attempted execution.

42.2 No Waiver. No provision of this Lease may be waived or modified except by a writing signed by the Party against whom such waiver or modification is sought.

42.3 Non-Waiver of Rights. No waiver or default by Lessor of any of the terms, conditions, covenants or agreements hereof to be performed, kept or observed by Lessee shall be construed or act as a waiver of any subsequent default of any of the terms, covenants, conditions or agreements herein contained to be performed, kept or observed by Lessee, and Lessor shall not be restricted from later enforcing any of the terms and conditions of this Lease.

42.4 Amendment. This Contract shall be modified only by a written amendment mutually agreed to and signed by both Parties, by persons duly authorized to enter into contracts on behalf of each Party.

42.5 Invalid Provisions. Should any provision of this Lease or any application thereof be held invalid by a court of competent jurisdiction, the remainder of this Lease shall not be affected thereby, unless one or both Parties would be substantially and materially prejudiced.

42.6 Litigation Expenses. In the event of litigation between Lessor and Lessee, the prevailing Party shall be entitled to recover its attorneys' fees and all costs and expenses of litigation, including witness fees, expert witness fees, and court costs.

42.7 Headings. The headings contained herein are for convenience in reference only and are not intended to define or limit the scope of this Lease or any term thereof.

42.8 Entire Agreement. This Lease, including exhibits attached hereto at the time of its execution, constitutes the entire agreement between the Parties hereto and supersedes all prior negotiations, understandings and agreements between the Parties concerning such matters.

43. INCORPORATION OF RECITALS

The recitals set forth herein are acknowledged by the Parties to be true and correct and are incorporated herein by this reference.

IN WITNESS WHEREOF, the Parties have executed this Lease the day and year first above written.

EXECUTED to be effective on the date specified above.

LESSOR:

PHOENIX-MESA GATEWAY AIRPORT AUTHORITY, a joint powers authority authorized by the State of Arizona

By: _____
J. Brian O'Neill, A.A.E.
Executive Director/CEO

STATE OF ARIZONA)
) ss.
County of Maricopa)

SUBSCRIBED, SWORN TO AND ACKNOWLEDGED before me this ___ day of _____, 2021, by J. Brian O'Neill, A.A.E., in his capacity as the Executive Director/CEO of the Phoenix-Mesa Gateway Airport Authority, a joint powers authority authorized by the State of Arizona.

_____
Notary Public

LESSEE:

TRIDENT MILTARY SYSTEMS, an Arizona Limited Liability company

By: Jack A Cameron
Jack A Cameron, Program Manager

STATE OF Arizona)
) ss.
County of Maricopa)

CHERYL D CALVERT
Notary Public - Arizona
Maricopa County
My Comm. Expires Mar 8, 2022

SUBSCRIBED, SWORN TO AND ACKNOWLEDGED before me this **6th** day of **August**, 2021, by Jack Cameron, in his capacity as Program Manger, Trident Military Systems, an Arizona Limited Liability company, for and on behalf of said LLC.

Cheryl D Calvert
Notary Public

EXHIBIT A

DEPICTION OF THE PREMISES

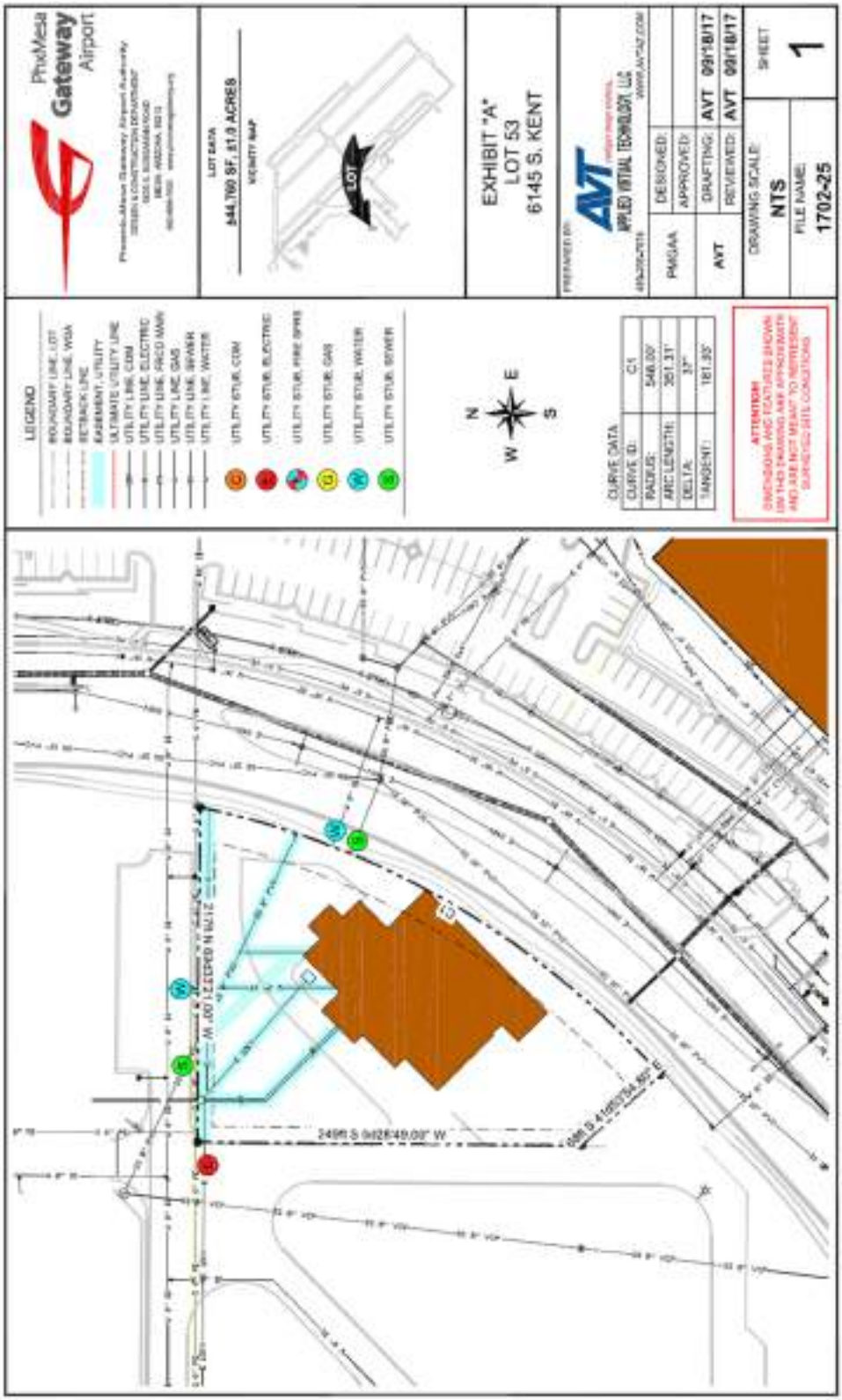

EXHIBIT B

AIRPORT RATES AND CHARGES SCHEDULE

https://www.gatewayairport.com/Documents/DocumentLibrary/Airport%20Rates%20and%20Charges/Airport%20Rates%20and%20Charges%20effective%204-1-21.pdf?Uniqueifier=nfNHypsW6O

AIRPORT FEES, SERVICES AND RENTAL RATES SCHEDULE

https://www.gatewayairport.com/Documents/DocumentLibrary/ExecDirSect/AirportFeesServicesRentalRates.pdf?Uniqueifier=7A2CniStni

EXHIBIT C

AIRCRAFT OPERATIONS GUIDELINES

C1. **Use of Airport**. Lessee, Lessee's assigns, sub-lessees, or transferees who operate aircraft at the Airport and are engaged in a private, government, or commercial aeronautical business or service and desire to use the Airport landing facilities for certain types of operations including, but not limited to: 1) taxiing and maneuvering on Airport runways, taxiways, ramps and aprons; 2) landings and approaches ("touch and go", "stop and go"); and 3) low approaches shall be subject to the provisions of this **EXHIBIT C**.

C2. **Fees**. As appropriate, Lessee shall pay Lessor fees as outlined below:

C2.1 *Landing Fee*: Lessee shall pay a landing fee at a rate equal to the amount reflected on the most current *Airport Rates and Charges Schedule* at the time of the aircraft operation, for each flight subject to a landing fee operated by or in conjunction with Lessee. The weight of any particular aircraft shall be its maximum certificated gross landing weight (MGLW). The amount owed to Lessor for each chargeable aircraft landing for each preceding calendar month shall be due and payable no later than the Twentieth (20th) day of the month succeeding the calendar month in which said aircraft landings took place. Lessee's written listing of all aircraft landings subject to such fee shall accompany said payment. Each entry in such listing shall include the date of the landing, the aircraft registration number, the type and model aircraft, the aircraft MGLW and the amount of the fee due.

C2.2 *Aircraft Ramp Space*. Lessee shall pay Lessor monthly, an aircraft-parking fee in an amount equal to that specified in the most current *Airport Rates and Charges* Schedule at the time of use, for each overnight aircraft parking position used by Lessee that is situated on Airport ramp outside Lessee's Premises. Such fees, if any, shall be payable to Lessor no later than the Twentieth (20th) day of the month following that in which Lessee occupied or used such space, and such payment shall be accompanied by a written listing of the aircraft (including registration number, make and model), dates and times of usage.

C2.3 *Other Space*. When available and specifically assigned to Lessee, Lessee shall pay Lessor monthly, in advance, a fee for Lessee's non-exclusive use of other space not situated on or part of the Premises. The location and cost of such other space shall be determined by Lessor at its sole discretion, and both may be subject to change from time to time by Lessor, as necessary.

C2.4 *Additional Space/Services*. In the event that Lessee requires space or special services such as, but not limited to, aircraft line services, out-of-station ARFF standby, operations safety officers, ground service equipment, or fuel spills response teams, Lessee shall pay Lessor's standard fees for such services at the time the service is rendered, unless a secured account or agreement is established prior to requesting additional services.

C3. **Books and Records**. Lessee shall maintain permanent books, records and ledgers accurately reflecting the total number of monthly Aircraft landings for each aircraft subject to a landing fee and any other aforementioned fee indicating the make, type (including model designation), registration, maximum certificated gross landing weight, and arrival and departure time of each aircraft involved. These records shall be made available to Lessor upon request. In addition to monthly payment as set forth in Section C2 herein and together therewith, Lessee shall provide Lessor with a written report, indicating all aircraft operations and related information for the preceding calendar month.

C4. **Disabled or Abandoned Aircraft**. Should any aircraft owned or operated by Lessee through accident or for any other reason, become disabled or be abandoned in any area which could interfere with the continuous, normal operations of any of the runways, taxiways and airfield facilities at the Airport, Lessee shall:

C4.1 Immediately remove said aircraft to such location as may be designated by Lessor, unless such aircraft is required to remain in place pending investigation by the appropriate regulatory agency or agencies of the federal government; and

C4.2 In the event of any accident where federal investigation in place is required, immediately upon receiving clearance to do so from the appropriate federal agency, remove said aircraft and any wreckage or debris resulting therefrom to the area(s) designated by said federal agency authorizing such removal; otherwise, such aircraft wreckage and debris shall be immediately removed from the Airport or stored at a location approved by Lessor.

C4.3 Should Lessee fail to proceed immediately to remove disabled aircraft, or should aircraft owned or operated by Lessee be abandoned on the Airport, Lessor shall have the right to remove such aircraft by any means Lessor deems necessary under the circumstances, and Lessee shall indemnify, defend, keep and hold Lessor, its members, board of directors, officers, agents, officials, servants, employees and contractors harmless from and against any and all claims, costs, loss, liability, actions, suits, proceedings, damage or expense (including costs of suit and attorneys' fees and expenses) incurred by Lessor or claimed by anyone by reason of removal of said aircraft, injury to persons or property or damages to such aircraft caused by such removal, as well as storage costs therefor. Lessee shall reimburse Lessor for any costs incurred by Lessor in removing and storing any aircraft, any property damage to the airport caused by such aircraft or removal within Ten (10) business days of demand therefor.

C5. **Aviation Fuel**. Lessee, at Lessee's sole cost and expense, shall procure aviation fuel delivered to its aircraft on the Airport. If fueling or defueling aircraft owned or operated by Lessee, or under Lessee's direct control, Lessee shall comply fully with Lessor's *Aviation Fuel Storage, Dispensing and Handling Guidelines* and applicable federal regulations.

C6. **Fly Friendly Procedures**. Lessee acknowledges that Lessor maintains *Fly Friendly* noise abatement procedures, and shall provide such information to flight crews, post the information in the Lessee's flight planning area, and use the procedures to the extent possible, when consistent with safety and Air Traffic Control directives.

EXHIBIT D

AIRPORT MINIMUM STANDARDS AND AIRPORT RULES AND REGULATIONS

(SEE LINKS)

AIRPORT MINIMUM STANDARDS

http://www.gatewayairport.com/Documents/DocumentLibrary/Board%20Policies/Airport%20Minimum%20Standards.pdf

&

AIRPORT RULES AND REGULATIONS

https://www.gatewayairport.com/Documents/DocumentLibrary/Board%20Policies/Airport%20Rules%20and%20Regulations%2020-35.pdf?Uniqueifier=Wgu7G4geNm

EXHIBIT E

STORM WATER PERMIT COMPLIANCE

E1. **Acknowledgments**.

E1.1 Lessee acknowledges that because of its activities, operations or location at the Airport, Lessee may be required by EPA Regulations 40 CFR Part 122 (Regulations) to obtain a National Pollution Discharge Elimination System (NPDES) Storm water discharge permit ("Permit"), a requirement that Lessee can fulfill by:

E1.1.1 Obtaining its own permit; or

E1.1.2 Joining as a co-permittee under Lessor's current storm water permit.

E1.2 Lessor has undertaken to obtain a storm water discharge permit, and Lessee acknowledges that it will enjoy a substantial economic benefit by joining as a co-permittee, and that such benefit serves as good and sufficient consideration for the obligations imposed upon and assumed by Lessee under this **EXHIBIT E**.

E1.3 Lessee acknowledges that it will have to devise and implement Best Management Practices (BMPs) to minimize the contact of storm and other precipitation event water with "significant materials" (as defined in the Regulations) generated, stored, handled or otherwise used by Lessee, and to document such BMPs with a written storm water management plan.

E1.4 It is the Lessee's obligation to determine if its activities or operations require obtaining such permit.

At such time as Lessee determines applicability and agrees to Section E1.1.2 above, the following shall apply:

E2. **Agreement**.

E2.1 Lessee agrees to be made, and to be, a co-permittee on Lessor's Multi-Sector General Permit (MSGP), and agrees that said Permit, as it is issued by the Arizona Department of Environmental Quality (AZDEQ), and as it may thereafter be amended, modified or otherwise changed, is incorporated by reference into this **EXHIBIT** and any subsequent renewals.

E2.2 Lessor agrees that, to the extent allowed by law, Lessee shall have the right to be removed from Lessor's Permit should this Lease be cancelled or terminated for other reasons, or due to Lessee's relocation, noncompliance with Permit requirements or exercise of choice; provided that in no event shall Lessee be relieved of its obligation to comply with the requirements of the AZPDES permit program with regard to its occupation and use of the Premises and the Airport, nor shall Lessee be excused from any obligations or indemnifications incurred and owed to Lessor prior to Lessee's removal from the Permit, resulting from a failure of Lessee to fulfill an obligation of such.

E3. **Compliance**.

E3.1 Lessor will provide Lessee with a true and complete copy of the Permit and any revisions thereto, and will, as time and personnel allow, consult with and assist Lessee with regard to Permit and other requirements.

E3.2 Lessor shall have the right to monitor Lessee's compliance with the Permit requirements, including, but not limited to: certification of non-storm water discharges; collection of storm water samples; preparation of storm water management plans; implementation of BMPs; and the maintenance of necessary records.

E3.3 Lessor reserves the right to impose upon Lessee any BMP or other action necessary to ensure Lessor's ability to comply with its Permit requirements or applicable Rules. Lessee shall have Ten (10) business days from date of receipt of written notice imposing such BMPs or other requirements to notify Lessor in writing if it objects to any action it is being directed to undertake. If Lessee does not provide the specified timely notice, it will be deemed to have assented to implement the BMPs or other requirements. If Lessee provides Lessor with timely written notice of its objections, the Parties agree to negotiate a prompt resolution of their differences. Lessee warrants that it will not serve a written notice of objections for purposes of delay or avoiding compliance.

E3.4 Lessee agrees to implement at its sole expense, unless otherwise agreed to in writing between Lessor and Lessee, those Permit and other requirements which pertain to its operations and activities on the Airport, and Lessee warrants that it will use its best efforts to meet all deadlines established by statute, regulation or ordinance, or that are agreed to by the Parties. Lessee acknowledges that time is of the essence in the implementation of all Permit requirements.

E4. **Permit Changes**. Lessee acknowledges that the terms and conditions of Lessor's Permit may change from time to time, and upon prior written notice from Lessor to Lessee of proposed changes, Lessee shall be given the opportunity to submit comments to Lessor prior to negotiations with the appropriate governmental entity or entities for permit modifications.

E5. **Material Condition**. Full compliance with the AZPDES permit program, 40 C.F.R. Part 122, is a material condition of this **EXHIBIT** and for any breach thereof which exposes Lessor to civil or criminal fine, penalty, sanction or remediation cost by any governmental entity, Lessor may terminate this **EXHIBIT** without recourse by Lessee.

E6. **Covenant of Good Faith**. Lessor and Lessee covenant to act in good faith to implement any requirements imposed by Lessor's Permit, to the end that the purposes of Section 402(P) of the Federal *Water Pollution Control Act* (33 U.S.C. 1342 (P)) may be achieved. The Parties acknowledge that close cooperation will be necessary to ensure compliance with any Permit requirements to promote safety and minimize costs, and each Party agrees to a candid exchange of information necessary to coordinate a storm water management and monitoring plan.

E7. **Indemnification**. The covenants of insurance and indemnification in favor of Lessor imposed by other provisions of this **EXHIBIT** shall extend to, and are incorporated into, the provisions of this **EXHIBIT**.

NOTICE OF LESSEE INTENTION TO JOIN OR REJECT NPDES CO-PERMITTEE STATUS

I, _____, on behalf of <TENANT NAME>, being duly authorized to do so, acknowledge that I am fully informed of [my, our] obligations under the National Pollutant Discharge Elimination System permit program as mandated by Section 402 (P) of the Federal *Water Pollution Control Act* (33 U.S.C. 1342 (P)), and regulations published in 40 C.F.R. Part 122 and the Arizona Department of Environmental Quality (AZDEQ).

I further acknowledge that, if applicable [I, we] have been offered the opportunity to join with the Phoenix-Mesa Gateway Airport Authority (PMGAA) as a co-permittee of the AZPDES permit issued by the Environmental Protection Agency to the PMGAA as it pertains to the Phoenix-Mesa Gateway Airport Authority ("Airport"), in accordance with the terms and conditions set forth above.

I, on behalf of <TENANT NAME> and being duly authorized to do so, (please check applicable box)

☐ desire to join the PMGAA as a co-permittee and understand and accept the obligation to comply with the aforesaid statute and regulations as they may apply to [my, our] activities and operations at the Airport.

☐ decline to join the PMGAA as a co-permittee.

☐ have determined the regulations are not applicable.

Dated this _____day of _____, <year>.

By: _____
(Signature)

Name: _____
(Print Name)

Its: _____
(Title)

EXHIBIT F

STANDARD TERMS AND CONDITIONS

1. **Certification.** By executing this Contract, Lessee certifies:

   a. The award of this Contract did not involve collusion or other anti-competitive practices.

   b. It shall not discriminate against any employee or applicant for employment in violation of Federal Executive Order 11246, or A.R.S. Section 31-1461, et. seq.

   c. It has not given, offered to give, nor intends to give at any time hereafter, any economic opportunity, future employment, gift, loan, gratuity, special discount, trip, favor, or service to a public servant in connection with this Contract; and Lessee hereby certifies that the individual signing this Contract is an authorized agent for Lessee and has the authority to bind the Lessee to the Contract.

2. **Arbitration**. At PMGAA's sole option, disputes between the parties may be resolved through arbitration as provided in A.R.S. Section 12-1501, *et seq*. Lessee shall continue to render the services required by this Contract without interruption, notwithstanding either party has filed suit against the other or PMGAA has expressly agreed to arbitration and either party has demanded arbitration.

3. **Affirmative Action.** Lessee shall abide by all the federal and state of Arizona provisions for equal opportunity in the workplace.

4. **Human Relations**. Lessee shall abide by all the federal and state of Arizona provisions against discrimination of disadvantaged business enterprises in applicable PMGAA contracts.

5. **Gratuities.** PMGAA may, by written notice to the Lessee, cancel this Contract if it is found that gratuities, in the form of entertainment, gifts or otherwise, were offered or given by Lessee or any agent or representative of Lessee, to any officer or employee of PMGAA amending, or the making of any determinations with respect to the performing of such Contract. If this Contract is canceled by PMGAA under this provision, PMGAA shall be entitled, in addition to any other rights and remedies, to recover or withhold from the Lessee the amount of the gratuity.

6. **Provisions Required by Law**. Each and every provision of law and any clause required by law to be in the Contract shall be read and enforced as though it were included herein, and if through mistake or otherwise any such provision is not inserted, or is not correctly inserted, then upon the application of either party the Contract shall forthwith be physically amended to make such insertion or correction.

7. **Rights and Remedies.** No provision in this Contract shall be construed, expressly or by implication, to waive either party's existing or future claim, right, or remedy available by law for breach of contract. The failure of either party to insist on strict performance of any Contract term or condition; to exercise or delay exercising any right or remedy provided in the Contract or by law; or to accept materials, services, or Lessee's services under this Contract or imposed by law, shall not be deemed a waiver of any right of either party to insist upon strict performance of the Contract.

8. **Right to Assurance.** Whenever one party to this Contract in good faith has reason to question the other party's intent to perform, the former party may demand that the other party give a written assurance of this intent to perform. If a demand is made and no written assurance is given within Five (5) business days, the demanding party may treat this failure as an anticipatory repudiation with this Contract.

9. **Advertising.** Lessee shall not advertise or publish information concerning this Contract without prior written consent of PMGAA.

10. **Force Majeure**

a. Neither party is liable to the other, and neither party may be deemed in default under this Contract, if and to the extent that such party's performance of this Contract is prevented by reason of Force Majeure. The term "Force Majeure" means an occurrence that is beyond the control of the party affected and occurs without its fault or negligence. Force Majeure does not include late performance by a subcontractor unless the delay arises out of a specific Force Majeure in accordance with this Force Majeure term and condition.

b. If either party is delayed at any time in the progress of the work by Force Majeure, the delayed party shall notify the other party in writing, as soon as practical, of the delay and shall specify the causes of delay in the notice. The notice must be hand-delivered or mailed certified-return receipt and must specifically refer to this Section. The delayed party shall cause the delay to cease as soon as practicable and shall notify the other party in writing when it has done so. The date of completion will be extended by Contract modification or amendment for the period of time that the completion date is necessarily delayed. This time extension is the Consultant's exclusive remedy for delay.

11. **Exclusive Possession.** All services, information, computer program elements, reports, and other deliverables, which may be created under this Contract, are the sole property of PMGAA and shall not be used or released by Lessee or any other person except with prior written permission by PMGAA.

12. **Licenses.** Lessee shall maintain in current status all federal, state, and local licenses and permits required for the operation of the business conducted by Lessee as applicable to this Contract.

13. **Subsequent Employment.** PMGAA may cancel this Contract without penalty or further obligation in accordance with A.R.S. Section 38-511 if any person significantly involved in initiating, negotiating, securing, drafting, or creating the contract, on behalf of the PMGAA is or becomes, at any time while the Contract or any extension of the contract is in effect, an employee of, or a contractor to any other party to this Contract with respect to the subject matter of the Contract. Such cancellation shall be effective when the parties to this Contract receive written notice from PMGAA, unless the notice specifies a later time.

14. **Patents.** Lessee shall defend, indemnify, and hold harmless PMGAA, its officers and employees from all liabilities, claims, damages, costs, or expenses, including, but not limited to attorneys' fees, for any alleged infringement of any person's patent rights or copyrights in consequence of the use by PMGAA, its officers, employees, agents, and other duly authorized representatives of tangible or intellectual property supplied to PMGAA by Lessee under this Contract.

15. **E-Verify Requirements.** To the extent applicable under A.R.S. § 41-4401, Offeror and its subcontractors warrant compliance with all federal immigration laws and regulations that relate to their employees, and compliance with the E-Verify requirements under A.R.S. §23-214(A). Offeror's or its subcontractors' failure to comply with such warranty shall be deemed a material breach of this Contract and may result in the termination of this Contract by PMGAA.

Phoenix-Mesa Gateway Airport Authority
5835 S Sossaman Road
Mesa, Arizona 85212-6014
www.gatewayairport.com

Board Action Item

Re: Resolution 21-36

To:	**Board of Directors**
From:	**Shea Joachim, CEcD, Business Development Director**
Through:	**J. Brian O'Neill, A.A.E., Executive Director/CEO**
Subject:	**Flair Airlines Ltd. Air Carrier Operating Agreement**
Date:	**September 21, 2021**

Proposed Motion

Authorizing the Executive Director to execute an Air Carrier Operating Agreement with Flair Airlines Ltd. for commercial air service at the Airport.

Narrative

Flair Airlines Ltd. ("Flair") has announced it intends to re-start commercial air service to Phoenix-Mesa Gateway Airport from various cities in Canada starting in October 2021.

The Air Carrier Operating Agreement between the Authority and Flair outlines the requirements for offering commercial passenger service at the Airport, identifies the applicable charges for facilities and services at the Airport, and contractually obligates Flair to adhere to the Airport's Rules and Regulations and Minimum Standards.

Fiscal Impact

Variable revenues are more difficult to forecast because they are based on passenger activity. However, the Airport anticipates increases in concessionaire revenue, rental car fees, Car Rental Facility Charges (CFC's), parking fees, Passenger Facility Charges (PFC's) and fuel service charges.

Attachment(s)

Air Carrier Operating Agreement

RESOLUTION NO. 21-36

WHEREAS, the Phoenix-Mesa Gateway Airport Authority ("Authority"), a joint powers airport authority formed pursuant to Arizona Revised Statute §28-8521 *et seq.* owns and operates the Phoenix-Mesa Gateway Airport ("Airport"); and

WHEREAS the Authority desires to authorize the Executive Director to execute an Air Carrier Operating Agreement with Flair Airlines Ltd. for commercial air service at the Airport.

NOW, THEREFORE, BE IT RESOLVED by the Board of Directors of the Authority as follows:

> **The Board of Directors of the Authority hereby authorize the Executive Director to execute an Air Carrier Operating Agreement with Flair Airlines Ltd. for commercial air service at the Airport. This resolution also authorizes the Chair or Executive Director/CEO to make such additions, deletions, and changes as may be approved by the Chair or Executive Director/CEO, necessary to carry out the purposes and intent of this Resolution.**

Passed and adopted by the Authority this 21st day of September, 2021.

John Giles, Chair

ATTEST:

Misty Johnson, Clerk of the Board

APPROVED AS TO FORM:

Jill Casson Owen, Attorney

Phoenix-Mesa Gateway Airport Authority

Air Carrier Operating Agreement

with

Flair Airlines Ltd.

Effective Date: October 1, 2021

TABLE OF CONTENTS

1. PERMITTED ACTIVITIES AND CONDITIONS OF AIRPORT USE. 2
2. TERM. 3
3. NONEXCLUSIVE RIGHTS. 3
4. RENTALS, FEES AND CHARGES 4
5. REPORTING REQUIREMENTS 5
6. INSURANCE 6
7. DISABLED OR ABANDONED AIRCRAFT. 7
8. ENVIRONMENTAL COMPLIANCE. 8
9. TAXES AND RELATED IMPOSITIONS. 8
10. RULES, REGULATIONS AND MINIMUM STANDARDS. 8
11. DEFAULT: TERMINATION BY PMGAA 9
12. GOVERNING LAW; ATTORNEY'S FEES 9
13. NONWAIVER 9
14. ASSIGNMENT 10
15. OTHER RESTRICTIONS 10
16. AIRPORT SECURITY. 10
17. AIRPORT SECURITY BADGE 10
18. NOTICE. 10
19. PRIOR AGREEMENTS AND PERMITS. 11
20. CORPORATE AUTHORIZATION 11
21. MISCELLANEOUS. 11
22. INCORPORATION OF RECITALS. 13

EXHIBIT A 14
EXHIBIT B 15
EXHIBIT C 16

Phoenix-Mesa Gateway Airport Authority
AIR CARRIER OPERATING AGREEMENT

This Air Carrier Operating Agreement (the "Agreement") is executed to be effective the 1st day of October 2021 (the "Effective Date") between the **PHOENIX-MESA GATEWAY AIRPORT AUTHORITY ("PMGAA")**, a joint powers airport authority authorized under the laws of the State of Arizona ("PMGAA"), and **Flair Airlines Ltd.** ("CARRIER"). PMGAA and CARRIER may be referred to collectively as "Parties," and each separately may be referred to as a "Party."

WITNESSETH:

WHEREAS, PMGAA is the owner and operator of the Phoenix-Mesa Gateway Airport generally located at the intersection of Ray Road and Sossaman Road, City of Mesa, Maricopa County, Arizona (the "Airport"); and

WHEREAS, PMGAA has the right to enter into Agreement, license and grant the use of property and facilities on the Airport and has full power and authority to enter into this Agreement in respect thereof; and

WHEREAS, CARRIER provides commercial airline services, charters, flight crews, aircraft and desires to use the Airport facilities for commercial operations; and

WHEREAS, CARRIER desires to obtain certain non-exclusive rights to use the common use areas of the passenger terminal, services and privileges in connection with the use of the Airport and its facilities, and PMGAA is willing to grant the same to CARRIER upon the terms and conditions hereinafter stated; and

WHEREAS, the Parties agree to enter into this Agreement, specifying the rights and obligations of the Parties with respect to the operation of the Airport by PMGAA and the use and/or occupancy of the Airport by CARRIER;

NOW, THEREFORE, for good and valuable consideration, the mutual covenants and conditions herein set forth and the sufficiency of which is agreed to by the Parties, the Parties hereby agree as follows:

1. PERMITTED ACTIVITIES AND CONDITIONS OF AIRPORT USE.

1.1 CARRIER shall have the right to use, in common with others, the passenger terminal, taxiways, runways and air navigational aids of the Airport for the purpose of conducting its Federal Aviation Regulation (FAR) Part 129 scheduled international operations, public charter, private charter and the landing and taking off of aircraft incidental thereto, and provided, however, such activities and services are performed in strict accordance with applicable PMGAA Minimum Standards, upon terms and conditions as herein provided.

1.2 RESERVED.

1.3 CARRIER shall not engage in any other commercial or revenue producing activity at the Airport (excluding charter activities by CARRIER, and charter activities requested by PMGAA) without first applying for and receiving written approval for such activity from PMGAA. In the event any other commercial or revenue producing activity is engaged in by CARRIER prior to obtaining such approval, without waiver or limitation of any other remedies available to PMGAA at law or equity, CARRIER hereby agrees to remit to PMGAA the sum equal to TEN PERCENT (10%) of gross billings for such unauthorized activity, plus any expenses incurred by PMGAA in the course of any audit conducted for all of CARRIER's activities.

1.4 CARRIER shall at all times comply with all Federal, State and local laws, ordinances, rules and regulations which are applicable to its operations or the Premises itself (including but not limited to the Americans with Disabilities Act), including all laws, ordinances, rules and regulations adopted after the Effective Date. Carrier shall at all times comply with the PMGAA Rules and Regulations, as the same may be amended from time to time in the Authority's sole and absolute discretion.

2. TERM.

2.1 Initial Term. Subject to earlier termination as provided herein, the term of this Agreement shall be one (1) year, commencing on the Effective Date (the "Term").

2.2 Renewal Term. Provided CARRIER is not then in default of this Agreement, the Term may be extended for one (1) year, without action by the Parties, unless otherwise terminated as provided herein.

2.3 Either Party may terminate this Agreement by providing the notified Party ninety (90) calendar days advance written notice of the terminating Party's intent to do so.

3. NONEXCLUSIVE RIGHTS.

CARRIER shall have the non-exclusive right to occupy and use the designated areas of the Airport while in compliance with the terms and conditions of this Agreement. All rights granted to CARRIER under this Agreement are nonexclusive, except by express written agreement herein. PMGAA may, in its sole discretion and at any time, permit third parties to conduct any and all business activities at the Airport that PMGAA deems appropriate, or conduct such activities itself, provided that such activities do not require or materially interfere with CARRIER's use of the Airport.

3.1 CARRIER shall not schedule or advertise flight schedules originating from or destined for Phoenix-Mesa Gateway Airport without prior coordination with PMGAA and confirmation from PMGAA of terminal availability.

3.2 Pursuant to PMGAA's Common Use Facilities Operating Procedures (attached as **EXHIBIT C**), CARRIER shall submit a copy of CARRIER's proposed schedule to PMGAA no less than 60 days prior to the schedule effective date. CARRIER shall include the name and contact information of individual responsible for setting CARRIER's schedule at the Airport with the schedule submission.

3.3 PMGAA shall provide CARRIER with common use of one (1) boarding gate and four (4) ticketing positions. In addition, CARRIER shall have common use access to additional ticket counters, gate hold rooms, and the baggage claim area for scheduled flight operations, the scheduling of such use is subject to the guidelines outlined in PMGAA's Common Use Facilities Operating Procedures. Common use requirements shall be scheduled with PMGAA's Operations & Maintenance department prior to any planned use.

3.4 PMGAA has implemented Common Use Facilities Operating Procedures. PMGAA reserves the right to modify said procedures from time-to-time, as it deems necessary in its sole and absolute discretion and authority to accomplish its purposes. CARRIER shall at all times comply with these operating procedures.

3.5 PMGAA has implemented an Airport Security Program in a form acceptable to the Transportation Security Administration (TSA). PMGAA reserves the right to modify said program from time-to-time, as it deems necessary to accomplish its purposes. CARRIER shall at all times comply with the Airport Security Program and indemnify, defend, hold and save PMGAA, its board members, member governments, officers, officials, employees, and agents free and harmless for, from, and against any violations of said Security Program caused by the acts, errors or omissions of CARRIER, its employees, agents, invitees or contractors.

4. RENTALS, FEES AND CHARGES

4.1 General. Rent for use of any exclusive use space due and payable at the beginning of each month. All other fees are assessed at the time of each use, flight, or service, as applicable, and are due and payable no later than the twentieth (20th) day of the following month in which the use or activity occurred ("Fee Due Date"). The CARRIER shall self- report its flight activity monthly to PMGAA pursuant to Section 5. Delinquent rents and fees shall be assessed a finance charge in accordance with Section 4.10.2. Any ground handling services requested of PMGAA or other authorized service provider by Carrier shall be governed by a separate agreement. In any event, CARRIER shall be the responsible party for the purposes of this Air Carrier Operating Agreement, and therefore CARRIER shall pay, or cause to be paid, to PMGAA, the fees and charges as outlined below:

4.2 Landing Fees. CARRIER shall pay a landing fee at a rate equal to the amount reflected on the most current Airport Rates & Charges Schedule at the time of the aircraft operation, for each flight operated by or in conjunction with CARRIER that is subject to a landing fee (as of April 1, 2021 $1.98/1000 lbs. MGLW). The weight used to determine the landing fee for any particular aircraft shall be its maximum certificated gross landing weight (MGLW), as certified by the Federal Aviation Administration.

4.3 Terminal Use Fees. Terminal Use includes ticket counter(s) and lobby area, secure hold room and boarding area podium, aircraft parking position (2 hours), baggage claim area, and common use computer equipment per flight. CARRIER shall pay PMGAA a Terminal Use Fee in the amount reflected on the most current Airport Rates & Charges Schedule. Terminal use fee increases will not exceed an average of three percent (3%) annually for the duration of this Agreement.

4.4 Common Use Set-up and Operating Fees. CARRIER shall pay PMGAA for common use terminal equipment, internet connection, and dark fiber per the most current Airport Rates & Charges Schedule.

4.5 Aircraft Parking Fees. CARRIER shall pay PMGAA a fee per the most recent Airport Rates & Charges Schedule for any aircraft occupying an aircraft parking position, including terminal gates and remote parking positions, for more than three hours; and for any portion of each 24hour parking period. This fee shall be waived if the aircraft performed a revenue service operation the day prior or will perform a revenue service operation the day after being parked for more than three hours.

4.6 Passenger Facility Charges. CARRIER shall pay monthly to PMGAA, on or before the Twentieth (20th) day of each month (the "Due Date"), a PFC in the amount of Four and 50/100 Dollars ($4.50) for each Enplaned Passenger departing the Airport on an CARRIER Revenue Flight during the previous calendar month. The collection of said fees by CARRIER shall be subject to the terms, conditions and methods of collection set forth in the Aviation Safety and Capacity Expansion Act of 1990, Section 9110, at it now exists or is modified hereafter (the "PFC Act") and 14 CFR 158.53.

4.7 Monthly Tie Down Fees. CARRIER shall pay Monthly Tie Down Fees per Rates and Charges.

4.8 Fueling Fees. CARRIER shall execute a Fuel Service Agreement with PMGAA.

4.9 Aircraft Ramp Space and Services. CARRIER shall pay PMGAA monthly for any aircraft line services, out-of-station Aircraft Rescue and Firefighting (ARFF) services, operations safety officers, ground service equipment use, fuel spill response teams and any other space or service requirements as specified in the Airport Rates & Charges Schedule or, if not so specified in that Schedule, as determined by PMGAA (collectively, "Additional Services").

4.10 Other Fees. Unless specified otherwise herein, CARRIER shall pay PMGAA for its usage or rental of PMGAA equipment and the performance of services by PMGAA within TEN (10) business days of CARRIER's receipt of an invoice (the "Due Date") for same from PMGAA. The amount of such fees shall be as provided by separate agreement between CARRIER and PMGAA, or, in the absence of such agreement, as specified in the most current Airport Rates and Charges Schedule or PMGAA's Price Listing in effect when the charge or fee was incurred. Failure to remit payment by the Due Date may result in the suspension of further equipment rentals or services until payment is

made to PMGAA in full.

4.11 With regard to the fees and charges specified in SECTION 4 above, the following conditions and considerations shall apply:

4.11.1 Airport Rates & Charges Schedule. The Airport Rates & Charges Schedule referred to in this Agreement may be revised from time to time. CARRIER shall pay the most current fee(s) at the time of the event or service, as applicable, unless specifically outlined in this Agreement. The current Airport Rates & Charges Schedule is attached as **EXHIBIT A** and is subject to change without prior notice or approval of CARRIER.

4.11.2 Finance Charges and Late Fees. If CARRIER fails to pay any charge due and owing to PMGAA in full on or before the applicable due date, CARRIER shall be responsible for interest on the unpaid fee or charge at the rate of EIGHTEEN PERCENT (18%) per annum from the due date until payment in full is made . In addition, in the event any payment is received more than TEN (10) days after the due date, a late penalty of TEN PERCENT (10%) of the amount of such delinquent amount shall be due and payable in addition thereto.

4.11.3 Books and Records. CARRIER shall maintain permanent books, records and ledgers accurately reflecting the total passengers, and total number of monthly aircraft landings for all aircraft subject to a landing fee indicating the make, type (including model designation), registration number, maximum certificated gross landing weight, and arrival and departure time of each aircraft involved. These records shall be made available to PMGAA upon request. PMGAA may audit the books, records and ledgers maintained by CARRIER in accordance with this SECTION 4. In the event an audit reveals a deficiency of TWO PERCENT (2%) or greater in the amount of payment made pursuant to this SECTION 4, CARRIER shall not only pay such deficiency but also the cost of any audit performed by PMGAA.

5. REPORTING REQUIREMENTS

5.1 CARRIER shall file with PMGAA written reports for the items specified below no later than the TENTH (10th) day of the calendar month following the month in which the specified activities occurred (the "Due Date"). Such reports shall cover all of CARRIER's Airport activities during said month, and include activity handled by CARRIER for other Air Transportation Companies not having an agreement with PMGAA providing for its own submission of activity data to PMGAA.

5.1.1 A complete listing of all of CARRIERS's actual aircraft landings at the Airport, including aircraft type and MGTOW ; and a listing, by destinations, of the number of flights that qualify under applicable waiver agreements for any landing fee waivers;

5.1.2 A complete listing of CARRIER's Enplaned Passengers and Deplaned Passengers, specified by and including the type of aircraft;

5.1.3 A complete listing, by date and flight number, of CARRIER's commercial cargo loaded and off loaded.

5.2 PMGAA shall have the right to rely on said activity reports in determining rentals and other charges due hereunder; provided, however, CARRIER shall have full responsibility for the accuracy of said reports. Payment deficiencies due to incomplete or inaccurate activity reports shall be subject to interest charges as set forth in SECTION 6.8.1 herein.

5.3 CARRIER shall at all times maintain and keep books, ledgers, accounts or other records wherein are accurately kept all entries reflecting the activity statistics to be reported pursuant to SECTION 5. Such records shall be retained by CARRIER for a period of THREE (3) years subsequent to the activities reported therein, or such other retention period as set forth in 14 CFR Part 249.7, and made available at Mesa, Arizona for audit and/or examination by PMGAA or its duly

authorized representative during all normal business hours. CARRIER shall produce such books and records at Mesa, Arizona within THIRTY (30) calendar days of PMGAA's notice to do so or pay all reasonable expenses, including but not limited to, transportation, food, lodging and other related expenses, necessary for an auditor selected by PMGAA to audit said books and records.

5.4 The cost of audit, with the exception of the aforementioned expenses, shall be borne by PMGAA; provided, however, the total cost of said audit shall be borne by CARRIER if either or both of the following conditions exist:

5.4.1 The audit reveals an underpayment of more than FIVE PERCENT (5%) of rentals, fees and charges due hereunder, as determined by said audit; and/or

5.4.2 CARRIER has failed to maintain true and complete books, records, accounts and supportive source documents in accordance with SECTION 5.

5.5 Payments. All payments due and payable hereunder shall be paid in lawful money of the United States of America, without set off, by check made payable to the Phoenix-Mesa Gateway Airport Authority and delivered to:

Phoenix-Mesa Gateway Airport Authority
Attn.: Accounts Receivable
5835 S. Sossaman Road
Mesa, Arizona 85212-0614

6. INSURANCE

6.1 General. Carrier shall procure and maintain the following types and amounts of insurance for its operations at the Airport throughout the Term of this Agreement and any Extension thereto:

Aircraft Liability insurance covering third party bodily injury and property damage, and passenger and contractual liabilities which shall protect and indemnify PMGAA from any and all claims arising in connection with aircraft movement on the Airport in amounts as are customarily carried by a carrier of like kind and size, but in no event less than $250,000,000.00 per occurrence. Such insurance shall also insure against third party liabilities arising from War Risk perils.

Airport Premises Liability insurance third party bodily injury and property damage, including coverage for "premises/operations," "products and completed operations," "host liquor" and "blanket contractual" liabilities in an amount not less than $250,000,000.00 per occurrence.

Comprehensive Automobile Liability insurance for all owned, non-owned and hired vehicles operated airside on the Airport that are assigned to or used in the performance of commercial activities in the amount of $25,000,000.00 per occurrence or combined single limit. If any hazardous materials are transported in conjunction with Carrier's business operations at or on the Airport, an MSC 90 endorsement shall be required in addition thereto.

Workers' Compensation insurance, as required by law, and *Employer's Liability* insurance in the amount of $1,000,000.

6.2 Additional Insurance. At any time during the Term of this Agreement, including any Extension thereto, PMGAA may, if in its reasonable determination the insurance coverage required by this SECTION 4 is no longer adequate, require CARRIER to increase its coverage to commercially reasonable amounts.

6.3 Blanket Insurance. CARRIER's insurance obligations under this Agreement may be satisfied by means of the general corporate "blanket" policies carried by it and evidenced by the insurance carrier's standard certificates thereof.

6.3.1 Use of Proceeds. Proceeds of any liability and property damage insurance required under this SECTION 5 shall be applied toward extinguishing, satisfying or remedying the liability, loss or damage with respect to which such proceeds may be paid.

6.4 Indemnity. To the fullest extent permitted by law CARRIER (as "indemnitor") shall indemnify, defend, hold and save PMGAA, its board members, and its member governments, officers, officials, employees, and agents (as "indemnitee") free and harmless of, for, from and against any and all Losses caused in whole or in part by (a) any act or omission of CARRIER (including indemnitor's officers, officials, agents, employees, contractors or invitees), (b) CARRIER's operations at the Airport, (c) CARRIER's violations of said Security Program caused, or alleged to be caused, by the acts, errors or omissions of CARRIER, its employees, agents, invitees or contractors, or (d) any default by CARRIER hereunder. This indemnification shall exclude responsibility for any consequential damages and for claims arising by reason of the negligent or wrongful act of PMGAA or its employees, contractors or agents. For purposes hereof "Losses" shall mean any and all losses, liabilities, judgments, suits, claims, damages, fines, penalties, costs and expenses (including reasonable attorneys and consultant fees, investigation costs, monitoring costs, remediation costs, and court costs), of any kind or nature." In carrying out the defense of any claim subject to its indemnification obligations hereunder, CARRIER shall use counsel reasonably acceptable to PMGAA.

6.6 Insurance Form. Each insurance policy obtained pursuant to this SECTION 6, except for Workers' Compensation and Employer Liability policies, shall: (i) name PMGAA as a certificate holder or an additional insured to the extent of Operator's contractual indemnity obligations; (ii) contain a provision that written notice of cancellation or modification thereof shall be given to PMGAA not less than THIRTY (30) calendar days before such cancellation or modification takes effect (TEN (10) days in the case of nonpayment of premium); and (iii) contain a waiver of subrogation in favor of PMGAA. Operator shall not permit any insurance policy to be canceled or modified without PMGAA's written consent unless equivalent replacement policies are issued with no lapse in coverage. All policies shall be obtained from insurance companies licensed to do business in the State of Arizona and possessing a rating of at least A - VII or higher from the A.M. Best Company, or an equivalent rating approved by PMGAA.

7. DISABLED OR ABANDONED AIRCRAFT.

7.1 Should any aircraft owned or operated by CARRIER, through accident or for any other reason, become disabled or be abandoned in any area which could interfere with the continuous, normal operations of any of the runways, taxiways and airfield facilities at the Airport, CARRIER shall, at CARRIER'S sole cost and expense:

7.1.1 Immediately remove said aircraft to such location as may be designated by PMGAA, unless such aircraft is required to remain in place pending investigation by the appropriate regulatory agency or agencies of the federal government; and

7.1.2 In the event of any accident where federal investigation in place is required, immediately upon receiving clearance to do so from the appropriate federal agency, remove said aircraft and any wreckage or debris resulting therefrom to the area(s) designated by said federal agency authorizing such removal; otherwise, such aircraft wreckage and debris shall be immediately removed from the Airport or stored at a location approved by PMGAA.

7.2 Should CARRIER fail to proceed immediately to remove disabled aircraft, or should aircraft owned or operated by CARRIER be abandoned on the Airport, PMGAA shall have the right to remove such aircraft by any means PMGAA deems necessary under the circumstances, and CARRIER shall, to the fullest extent permitted by law, indemnify, defend, keep and hold PMGAA, its members, board of directors, officers, agents, officials, servants, employees and contractors harmless from and against any and all claims, costs, loss, liability, actions, suits, proceedings, damage or expense (including costs of suit and attorneys' fees and expenses) incurred by PMGAA or claimed by anyone by reason of removal of said aircraft, injury to persons or property or damages to such aircraft caused by such removal, as well as storage costs therefor. CARRIER shall reimburse PMGAA for any costs incurred by PMGAA in removing and storing any aircraft, at PMGAA's sole discretion, and as provided herein in performing authorized maintenance on its aircraft on the Airport.

7.3 Sound and Noise Suppression. CARRIER shall comply fully with PMGAA rules and requirements

when performing high-speed engine test operations at the Airport, if any, and Section 10.3 to mitigate excessive ambient sound and/or noise that may be generated incident thereto and that have or may have an adverse effect on other Airport tenant operations and the surrounding community. CARRIER acknowledges and agrees that said rules and requirements for such test operations may change from time to time at PMGAA's sole and absolute discretion. CARRIER also agrees that any costs associated with compliance with PMGAA's rules and requirements for sound or noise suppression or mitigation shall be borne solely by CARRIER.

8. ENVIRONMENTAL COMPLIANCE.

CARRIER shall at all times during the existence of this Agreement promptly observe and comply with applicable Federal, State, and local laws, regulations, rules and standards concerning the environment (collectively, the "Environmental Laws"). CARRIER shall be responsible for collecting, storing, recycling and/or disposing of its hazardous or toxic waste, if any, in compliance with the Environmental Laws governing the storage and disposal of hazardous or toxic waste. CARRIER shall ensure its employees and agents are aware that domestic drains, storm drains, or industrial waste drains shall not be used to dispose of gasoline, hydraulic fluid, solvents, concentrated cleaning agents or any other hazardous or toxic materials. Where so required, PMGAA may act on behalf of CARRIER, as and if appropriate, to dispose of CARRIER's waste, sign manifests on behalf of CARRIER and assign such disposal to CARRIER's EPA identification (ID) number. CARRIER shall repay PMGAA the costs and fees for doing so within TEN (10) days of demand therefor. CARRIER shall, to the fullest extent permitted by law, indemnify, defend and hold PMGAA, its members, board of directors, officers, agents, officials, employees, and contractors harmless from and against any and all claims, costs, loss, liability, actions, suits, proceedings, damage or expense including, but not limited to, the costs of suit and reasonable attorneys' fees and expenses of any nature whatsoever arising out of or related to CARRIER's failure to comply with the Environmental Laws.

9. TAXES AND RELATED IMPOSITIONS.

In the event any governmental authority shall impose a tax or imposition based upon this Agreement, upon CARRIER or its aircraft, or upon payments to be made hereunder, CARRIER shall pay such amounts either to PMGAA or the appropriate governmental authority on or before any delinquency date. Specifically, CARRIER shall be responsible for any transaction privilege, sales, excise or other similar tax except income taxes as a result of this Agreement. CARRIER shall also pay all licensing or permitting fees necessary or required by law for the conduct of its aeronautical operations hereunder, or any other matters hereunder. CARRIER shall be responsible for any property interests created hereunder, which may constitute or be deemed to be a possessory interest for purposes of taxation.

10. RULES, REGULATIONS AND MINIMUM STANDARDS.

10.1 CARRIER shall at all times comply with all federal, State and local laws and ordinances, rules and regulations, which are applicable to its operations, or the operation, management, maintenance, or administration of the Airport, including but not limited to the Americans with Disabilities Act, and all laws, ordinances, rules and regulations adopted after the Effective Date. CARRIER shall at all times comply with all rules and regulations, and minimum standards established by PMGAA regarding operation and maintenance of the Airport, copies of which are attached as **EXHIBIT B** and are incorporated herein. CARRIER will be responsible for controlling and preventing disruptive pedestrian and vehicle traffic, if any, associated with its activities on the Airport. CARRIER also shall display or provide copies to PMGAA of any permits, licenses, or other evidence of compliance with laws upon request.

10.2 PMGAA shall operate the Airport in compliance with all applicable Federal state and local laws, ordinances, rules and regulations, and shall enforce the Airport Rules and Regulations established by it to ensure the effective and orderly operation of the Airport, and to prevent any disruption caused by CARRIER's operations at and on the Airport.

10.3 CARRIER acknowledges receipt of and agrees to abide by PMGAA's *Fly Friendly* noise abatement procedures and will provide such information to flight crews and/or students, post

the information in CARRIER's flight planning area, and use the procedures to the extent possible when consistent with safety and air traffic control directives.

11. DEFAULT: TERMINATION BY PMGAA

11.1 General Grounds. PMGAA may terminate this Agreement upon the occurrence of any of the following events:

11.1.1 Failure of CARRIER to perform any of its obligations under this Agreement, or any other contract, license or agreement between the Parties, which failure shall not be cured within FIVE (5) business days after delivery by PMGAA **to** CARRIER of a written notice of such failure.

11.1.2 The filing of any lien against the Airport because of any act or omission of CARRIER which is not discharged within FIVE (5) business days of receipt of actual notice of such lien by CARRIER.

CARRIER may terminate this Agreement upon the occurrence of any of the following events:

11.1.3 Failure of PMGAA to perform any of its obligations under this Agreement, or any other contract, license or agreement between the Parties, which failure shall not be cured within FIVE (5) business days after delivery by CARRIER **to** PMGAA of a written notice of such failure.

11.1.4 The filing of any lien against the Airport because of any act or omission of PMGAA which is not discharged within FIVE (5) business days of receipt of actual notice of such lien by PMGAA.

11.2 Failure to Pay Fees. PMGAA may declare CARRIER in default of this Agreement by giving CARRIER FIVE (5) business day's written notice of CARRIER's failure to timely pay any fees or payments due pursuant to this Agreement. If CARRIER fails to cure such payment default within said FIVE (5) business day period, PMGAA may, in its sole discretion, elect to do any one or more than one of the following:

11.2.1 Institute action(s) to enforce this Agreement; or

11.2.2 Terminate this Agreement automatically without further notice to CARRIER; or

11.2.3 Exercise any other remedy allowed by law or equity.

11.3 Failure to Provide Insurance. In the event CARRIER at any time fails to maintain all insurance coverage required by this Agreement, PMGAA shall have the right, upon written notice to CARRIER, **to** immediately terminate this Agreement or secure the required insurance at CARRIER's expense.

11.4 No Waiver by PMGAA. No waiver by PMGAA of any default by CARRIER in the performance of its obligations under this Agreement shall be deemed to be a waiver of any subsequent default by CARRIER in the performance of any such obligations.

12. GOVERNING LAW; ATTORNEY'S FEES.

The laws of the State of Arizona shall govern this Agreement and the matters set forth therein, without regard to its conflict of law principles. Venue of any action brought under this Agreement shall, at the option of PMGAA, lie in Maricopa County, Arizona. In the event of any litigation or arbitration between PMGAA and CARRIER arising under this Agreement, the successful party shall be entitled to recover its attorney's fees, expert witness fees and other costs incurred in connection with such litigation or arbitration.

13. NONWAIVER.

PMGAA's right to revoke this Agreement shall be absolute. Any election by PMGAA to not enforce any

provision of this Agreement, or any failure by PMGAA to exercise any of the remedies allowed PMGAA under this Agreement, shall not operate as a waiver by PMGAA of any of its right hereunder.

14. ASSIGNMENT.

CARRIER shall not assign or transfer any right or interest in this Agreement.

15. OTHER RESTRICTIONS.

CARRIER shall comply with all rules, laws, ordinances, and statues of any governmental authority having jurisdiction over the Airport or the matters provided in this Agreement.

16. AIRPORT SECURITY.

PMGAA maintains an approved Airport Security Plan (the "Security Plan") pursuant to 49 CFR Parts 1540 and 1542. CARRIER shall at all times comply with the Security Plan and the written and verbal directives issued by PMGAA supporting the Security Plan.

16.1 The CARRIER shall immediately correct physical or procedural deficiencies which are contrary to the Security Plan, security directives, security bulletins, or verbal notifications existing now or in the future. CARRIER is responsible for maintaining security practices, facilities, and perimeter boundaries on their leasehold that meet the security standards of the Security Plan.

16.2 CARRIER shall, to the fullest extent permitted by law, indemnify, defend, and hold PMGAA harmless for, from, and against any violations of the Security Plan committed by any agents, employees, invitees, subcontractors, or independent contractors of the CARRIER.

16.3 CARRIER shall conduct and document all self-audits and self-inspections as required by the "TSA" or PMGAA and make such audits available for inspection.

16.4 CARRIER shall designate a primary security coordinator to receive security -related briefings, bulletins, and sensitive security information ("SSI").

16.5 PMGAA reserves the right to modify the Security Plan from time-to-time, as necessary, or as directed by the TSA.

17. AIRPORT SECURITY BADGE

17.1 Carrier employees/contractors that require a badge shall be obligated to complete all training and comply with all security requirements and directives issued by PMGAA, TSA, or other entities having jurisdiction at PMGAA.

17.2 CARRIER and employees/contractors shall comply with all security-related audits, inspection, and screenings conducted by PMGAA.

17.3 CARRIER will immediately notify PMGAA and promptly return badges to the Airport Badging Office when badge holders terminate employment, the badge is no longer needed, or the employee/contractor is on extended leave.

17.4 Misuse of a badge or security procedures will bring about punitive action including suspension or revocation of one or all badges.

18. NOTICE.

18.1 All notices required or permitted under this Agreement shall not be deemed effective unless personally delivered or mailed by certified mail, return receipt requested, postage prepaid, or by reputable commercial overnight courier service, to the following addresses:

TO PMGAA: Phoenix-Mesa Gateway Airport Authority
Attn.: Business Development Department
5835 S. Sossaman Road
Mesa, Arizona 85212-0614

TO CARRIER: Flair Airlines, Ltd.
Attn: Legal Notices
4032 1000 Airport Road

Edmonton, Alberta T9E 0V3

18.2 Notices shall be deemed to have been received TWO (2) business days after the date of mailing, if given by certified mail, or upon actual receipt if personally delivered or if given by reputable commercial overnight courier service. Any Party may designate in writing a different address for notice purposes pursuant to this SECTION.

19. PRIOR AGREEMENTS AND PERMITS.

Upon execution hereof, this Agreement shall supersede and cancel any prior agreements between PMGAA and CARRIER with respect to the business activities governed hereby. CARRIER shall not construe PMGAA's execution of this Agreement as a waiver of any prior indebtedness or obligation to PMGAA under any prior agreement or license, nor does PMGAA waive any claim or cause of action arising therefrom.

20. CORPORATE AUTHORIZATION.

In executing this Agreement, CARRIER represents and warrants to PMGAA that if CARRIER is a corporation, CARRIER has obtained and been granted the full right, power and authority to enter into this Agreement.

21. MISCELLANEOUS.

21.1 Personal Liability. No member of or employee of either Party shall be charged personally or held contractually liable by or to the other Party under any term or provision of this Agreement because of any breach thereof or because of its execution or attempted execution.

21.2 No Waiver. No provision of this Agreement may be waived or modified except by a writing signed by the Party against whom such waiver or modification is sought.

21.3 Non-Waiver of Rights. No waiver or default by PMGAA of any of the terms, conditions, covenants or agreements hereof to be performed, kept or observed by CARRIER shall be construed or act as a waiver of any subsequent default of any of the terms, covenants, conditions or agreements herein contained to be performed, kept or observed by CARRIER, and PMGAA shall not be restricted from later enforcing any of the terms and conditions of this Agreement.

21.4 Amendment. Only a written instrument executed by the Parties may amend this Agreement.

21.5 Invalid Provisions. Should any provision of this Agreement or any application thereof be held invalid by a court of competent jurisdiction, the remainder of this Agreement shall not be affected thereby, unless one or both Parties would be substantially and materially prejudiced.

21.6 Headings. The headings contained herein are for convenience in reference only and are not intended to define or limit the scope of this Agreement or any term thereof.

21.7 Entire Agreement. This Agreement, including **EXHIBITS** attached hereto at the time of its execution, constitutes the entire agreement between the Parties hereto and supersedes all prior negotiations, understandings and agreements between the Parties concerning such matters.

22. INCORPORATION OF RECITALS.

The recitals set forth above are acknowledged by the Parties to be true and correct and are incorporated herein by this reference.

IN WITNESS WHEREOF, the Parties have executed this Agreement to be effective on the Effective Date specified above.

FOR PMGAA:

_____

By: J. Brian O'Neill, A.A.E

Its: Executive Director/CEO

Date Signed: _____

FOR CARRIER:

_____

By: Stephen Jones

Its: President and CEO

Date Signed: _____

EXHIBIT A

Airport Rates & Charges Schedule

https://www.gatewayairport.com/Documents/DocumentLibrary/Airport%20Rates%20and%20Charges/Airport%20Rates%20and%20Charges%20effective%204-1-21.pdf?Uniqueifier=DBDPXpsWQ0

Airport Fees, Services & Rental Rates

https://www.gatewayairport.com/Documents/DocumentLibrary/ExecDirSect/AirportFeesServicesRentalRates.pdf?Uniqueifier=OqVEKsPQrv

EXHIBIT B

PMGAA Minimum Standards

https://www.gatewayairport.com/Documents/DocumentLibrary/Board%20Policies/Airport%20Minimum%20Standards.pdf?Uniqueifier=ouIVauG2kL

PMGAA Rules & Regulations

https://www.gatewayairport.com/Documents/DocumentLibrary/Board%20Policies/Airport%20Rules%20and%20Regulations%2020-35.pdf?Uniqueifier=ouIVauG2kL

EXHIBIT C

Common Use Facilities Operating Procedures

https://www.gatewayairport.com/Documents/DocumentLibrary/Regulatory%20Documents/Common%20Use%20Facility%20Op%20Proc%2020-01.pdf?Uniqueifier=CndE5f5EfP

Phoenix-Mesa Gateway Airport Authority
5835 S Sossaman Road
Mesa, Arizona 85212-6014
www.gatewayairport.com

Board Action Item

Re: Resolution 21-37

To:	**Board of Directors**
From:	**Shea Joachim, CEcD, Business Development Director**
Through:	**J. Brian O'Neill, A.A.E., Executive Director/CEO**
Subject:	**Sun Country, Inc. Operating Agreement**
Date:	**September 21, 2021**

Proposed Motion
Authorizing the Executive Director to execute an Air Carrier Operating Agreement with Sun Country, Inc. for commercial air service at the Airport.

Narrative
Sun Country, Inc. ("Sun Country") is a privately held company based in the Twin Cities of Minneapolis-St. Paul. The award-winning airline is a leader in leisure travel flying to popular destinations across North America, Central America and the Caribbean, having earned a reputation for offering world-class service at an affordable price.

Sun Country recently notified the Phoenix-Mesa Gateway Airport Authority ("Authority") that it intends to initiate seasonal, non-stop service from the Phoenix-Mesa Gateway Airport to Minneapolis-St. Paul International Airport starting in November 2021.

The Air Carrier Operating Agreement between the Authority and Sun Country outlines the requirements for offering commercial passenger service at the Airport, identifies the applicable charges for facilities and services at the Airport, and contractually obligates Sun Country to adhere to the Airport's Rules and Regulations and Minimum Standards.

Fiscal Impact
Variable revenues are difficult to forecast because they are based on passenger activity. However, the Airport anticipates increases in concessionaire revenue, rental car fees, Car Rental Facility Charges (CFC's), parking fees, Passenger Facility Charges (PFC's) and fuel service charges.

Attachment(s)
Air Carrier Operating Agreement

RESOLUTION NO. 21-37

WHEREAS, the Phoenix-Mesa Gateway Airport Authority ("Authority"), a joint powers airport authority formed pursuant to Arizona Revised Statute §28-8521 *et seq.* owns and operates the Phoenix-Mesa Gateway Airport ("Airport"); and

WHEREAS the Authority desires to authorize the Executive Director to execute an Air Carrier Operating Agreement with Sun Country, Inc. for commercial air service at the Airport.

NOW, THEREFORE, BE IT RESOLVED by the Board of Directors of the Authority as follows:

> **The Board of Directors of the Authority hereby authorize the Executive Director to execute an Air Carrier Operating Agreement with Sun Country, Inc. for commercial air service at the Airport. This resolution also authorizes the Chair or Executive Director/CEO to make such additions, deletions, and changes as may be approved by the Chair or Executive Director/CEO, necessary to carry out the purposes and intent of this Resolution.**

Passed and adopted by the Authority this 21st day of September, 2021.

_____
John Giles, Chair

ATTEST:

_____
Misty Johnson, Clerk of the Board

APPROVED AS TO FORM:

_____
Jill Casson Owen, Attorney

Phoenix-Mesa Gateway Airport Authority

Air Carrier Operating Agreement

with

Sun Country, Inc.

Effective Date: November 1, 2021

TABLE OF CONTENTS

1. PERMITTED ACTIVITIES AND CONDITIONS OF AIRPORT USE 2
2. TERM 3
3. NONEXCLUSIVE RIGHTS 3
4. RENTALS, FEES AND CHARGES 4
5. REPORTING REQUIREMENTS 5
6. INSURANCE 6
7. DISABLED OR ABANDONED AIRCRAFT 7
8. ENVIRONMENTAL COMPLIANCE 8
9. TAXES AND RELATED IMPOSITIONS 8
10. RULES, REGULATIONS AND MINIMUM STANDARDS 8
11. DEFAULT: TERMINATION BY PMGAA 9
12. GOVERNING LAW, ATTORNEYS FEES 9
13. NONWAIVER 10
14. ASSIGNMENT 10
15. OTHER RESTRICTIONS 10
16. AIRPORT SECURITY 10
17. AIRPORT SECURITY BADGE 10
18. NOTICE 10
19. PRIOR AGREEMENTS AND PERMITS 11
20. CORPORATE AUTHORIZATION 11
21. MISCELLANEOUS 11
22. INCORPORATION OF RECITALS 13

EXHIBIT A 14

EXHIBIT B 15

EXHIBIT C 16

Phoenix-Mesa Gateway Airport Authority
AIR CARRIER OPERATING AGREEMENT

This Air Carrier Operating Agreement (the "Agreement") is executed to be effective the 1st day of November 2021 (the "Effective Date") between the **PHOENIX-MESA GATEWAY AIRPORT AUTHORITY ("PMGAA")**, a joint powers airport authority authorized under the laws of the State of Arizona ("PMGAA"), and **Sun Country, Inc.** ("CARRIER"). PMGAA and CARRIER may be referred to collectively as "Parties," and each separately may be referred to as a "Party."

WITNESSETH:

WHEREAS, PMGAA is the owner and operator of the Phoenix-Mesa Gateway Airport generally located at the intersection of Ray Road and Sossaman Road, City of Mesa, Maricopa County, Arizona (the "Airport"); and

WHEREAS, PMGAA has the right to enter into Agreement, license and grant the use of property and facilities on the Airport and has full power and authority to enter into this Agreement in respect thereof; and

WHEREAS, CARRIER provides commercial airline services, charters, flight crews, aircraft and desires to use the Airport facilities for commercial operations; and

WHEREAS, CARRIER desires to obtain certain non-exclusive rights to use the common use areas of the passenger terminal, services and privileges in connection with the use of the Airport and its facilities, and PMGAA is willing to grant the same to CARRIER upon the terms and conditions hereinafter stated, and

WHEREAS, the Parties agree to enter into this Agreement, specifying the rights and obligations of the Parties with respect to the operation of the Airport by PMGAA and the use and/or occupancy of the Airport by CARRIER;

NOW, THEREFORE, for good and valuable consideration, the mutual covenants and conditions herein set forth and the sufficiency of which is agreed to by the Parties, the Parties hereby agree as follows:

1. PERMITTED ACTIVITIES AND CONDITIONS OF AIRPORT USE.

1.1 CARRIER shall have the right to use, in common with others, the passenger terminal, taxiways, runways and air navigational aids of the Airport for the purpose of conducting its Federal Aviation Regulation (FAR) Part 121 scheduled domestic operations, public charter, private charter and the landing and taking off of aircraft incidental thereto, and provided, however, such activities and services are performed in strict accordance with applicable PMGAA Minimum Standards, upon terms and conditions as herein provided.

1.2 RESERVED

1.3 CARRIER shall not engage in any other commercial or revenue producing activity at the Airport (excluding charter activities by CARRIER, and charter activities requested by PMGAA) without first applying for and receiving written approval for such activity from PMGAA. In the event any other commercial or revenue producing activity is engaged in by CARRIER prior to obtaining such approval, without waiver or limitation of any other remedies available to PMGAA at law or equity, CARRIER hereby agrees to remit to PMGAA the sum equal to TEN PERCENT (10%) of gross billings for such unauthorized activity, plus any expenses incurred by PMGAA in the course of any audit conducted for all of CARRIER's activities.

1.4 CARRIER shall at all times comply with all Federal, State and local laws, ordinances, rules and regulations which are applicable to its operations or the Premises itself (including but not limited to the Americans with Disabilities Act), including all laws, ordinances, rules and regulations adopted after the Effective Date. Carrier shall at all times comply with the PMGAA Rules and Regulations, as the same may be amended from time to time in the Authority's sole and absolute discretion.

2. TERM.

2.1 Initial Term. Subject to earlier termination as provided herein, the term of this Agreement shall be one (1) year, commencing on the Effective Date (the "Term").

2.2 Renewal Term. Provided CARRIER is not then in default of this Agreement, the Term may be extended for one (1) year, without action by the Parties, unless otherwise terminated as provided herein.

2.3 Either Party may terminate this Agreement by providing the notified Party ninety (90) calendar days advance written notice of the terminating Party's intent to do so.

3. NONEXCLUSIVE RIGHTS.

CARRIER shall have the non-exclusive right to occupy and use the designated areas of the Airport while in compliance with the terms and conditions of this Agreement. All rights granted to CARRIER under this Agreement are nonexclusive, except by express written agreement herein. PMGAA may, in its sole discretion and at any time, permit third parties to conduct any and all business activities at the Airport that PMGAA deems appropriate, or conduct such activities itself, provided that such activities do not require or materially interfere with CARRIER's use of the Airport.

3.1 CARRIER shall not schedule or advertise flight schedules originating from or destined for Phoenix-Mesa Gateway Airport without prior coordination with PMGAA and confirmation from PMGAA of terminal availability.

3.2 Pursuant to PMGAA's Common Use Facilities Operating Procedures (attached as **EXHIBIT C**), CARRIER shall submit a copy of CARRIER's proposed schedule to PMGAA no less than 60 days prior to the schedule effective date. Along with the schedule submission, CARRIER shall include the name and contact information of the individual responsible for setting CARRIER's schedule at the Airport.

3.3 PMGAA shall provide CARRIER with common use of one (1) boarding gate and four (4) ticketing positions. In addition, CARRIER shall have common use access to additional ticket counters, gate hold rooms, and the baggage claim area for scheduled flight operations, the scheduling of such use is subject to the guidelines outlined in PMGAA's Common Use Facilities Operating Procedures. Common use requirements shall be scheduled with PMGAA's Operations & Maintenance department prior to any planned use.

3.4 PMGAA has implemented Common Use Facilities Operating Procedures. PMGAA reserves the right to modify said procedures from time-to-time, as it deems necessary in its sole and absolute discretion and authority to accomplish its purposes. CARRIER shall at all times comply with these operating procedures.

3.5 PMGAA has implemented an Airport Security Program in a form acceptable to the Transportation Security Administration (TSA). PMGAA reserves the right to modify said program from time-to-time, as it deems necessary to accomplish its purposes. CARRIER shall at all times comply with the Airport Security Program and indemnify, defend, hold and save PMGAA, its board members, member governments, officers, officials, employees, and agents free and harmless for, from, and against any violations of said Security Program caused, or alleged to be caused, by the acts, errors or omissions of CARRIER, its employees, agents, invitees or contractors.

4. RENTALS, FEES AND CHARGES

4.1 General. Rent for use of any exclusive use space due and payable at the beginning of each month. All other fees are assessed at the time of each use, flight, or service, as applicable, and are due and payable no later than the twentieth (20th) day of the following month in which the use or activity occurred ("Due Date"). The CARRIER shall self-report its flight activity monthly to PMGAA pursuant to Section 5. Delinquent rents and fees shall be assessed a finance charge in accordance with Section 4.11.2. Any ground handling services requested of PMGAA or other authorized service provider by Carrier shall be governed by a separate agreement. In any event, CARRIER shall be the responsible party for the purposes of this Air Carrier Operating Agreement, and therefore CARRIER shall pay, or cause to be paid, to PMGAA, the fees and charges as outlined below:

4.2 Landing Fees. CARRIER shall pay a landing fee at a rate equal to the amount reflected on the most current Airport Rates & Charges Schedule at the time of the aircraft operation, for each flight operated by or in conjunction with CARRIER that is subject to a landing fee (as of April 1, 2021 $1.98/1000 lbs. MGLW). The weight used to determine the landing fee for any particular aircraft shall be its maximum certificated gross landing weight (MGLW), as certified by the Federal Aviation Administration.

4.3 Terminal Use Fees. Terminal Use includes ticket counter(s) and lobby area, secure hold room and boarding area podium, aircraft parking position, baggage claim area, and common use computer equipment per flight. CARRIER shall pay PMGAA a Terminal Use Fee in the amount reflected on the most current Airport Rates & Charges Schedule.

4.4 Common Use Set-up and Operating Fees. CARRIER shall pay PMGAA for common use terminal equipment, internet connection, and dark fiber per the most current Airport Rates & Charges Schedule.

4.5 Aircraft Parking Fees. CARRIER shall pay PMGAA a fee per the most recent Airport Rates & Charges Schedule for any aircraft occupying an aircraft parking position, including terminal gates and remote parking positions, for more than three hours; and for any portion of each 24 hour parking period. This fee shall be waived if the aircraft performed a revenue service operation the day prior or will perform a revenue service operation the day after being parked for more than three hours.

4.6 Passenger Facility Charges. CARRIER shall pay monthly to PMGAA, on or before the Twentieth (20th) day of each month (the "Due Date"), a PFC in the amount of Four and 50/100 Dollars ($4.50) for each Enplaned Passenger departing the Airport on an CARRIER Revenue Flight during the previous calendar month. The collection of said fees by CARRIER shall be subject to the terms, conditions and methods of collection set forth in the Aviation Safety and Capacity Expansion Act of 1990, Section 9110, as it now exists or is modified hereafter (the "PFC Act") and 14 CFR 158.53.

4.7 Monthly Tie Down Fees. CARRIER shall pay Monthly Tie Down Fees per Rates and Charges.

4.8 Fueling Fees. CARRIER shall execute a Fuel Service Agreement with PMGAA.

4.9 Aircraft Ramp Space and Services. CARRIER shall pay PMGAA monthly for any aircraft line services, out-of-station Aircraft Rescue and Firefighting (ARFF) services, operations safety officers, ground service equipment use, fuel spill response teams and any other space or service requirements as specified in the Airport Rates & Charges Schedule or, if not so specified in that Schedule, as determined by PMGAA (collectively, "Additional Services").

4.10 Other Fees. Unless specified otherwise herein, CARRIER shall pay PMGAA for its usage or rental of PMGAA equipment and the performance of services by PMGAA within TEN (10) business days of CARRIER's receipt of an invoice (the "Due Date") for same from PMGAA. The amount of

such fees shall be as provided by separate agreement between CARRIER and PMGAA, or, in the absence of such agreement, as specified in the most current Airport Rates and Charges Schedule or Airport Fees, Services & Rental Rates in effect when the charge or fee was incurred. Failure to remit payment by the Due Date may result in the suspension of further equipment rentals or services until payment is made to PMGAA in full.

4.11 With regard to the fees and charges specified in this SECTION 4, the following conditions and considerations shall apply

4.11.1 Airport Rates & Charges Schedule. The Airport Rates & Charges Schedule and Airport Fees, Services and Rental Rates referred to in this Agreement may be revised from time to time. CARRIER shall pay the most current fee(s) at the time of the event or service, as applicable, unless specifically outlined in this Agreement. The current Airport Rates & Charges Schedule and the Airport Fees, Services and Rental Rates are attached as **EXHIBIT A** and is subject to change without prior notice or approval of CARRIER.

4.11.2 Finance Charges and Late Fees. If CARRIER fails to pay any charge due and owing to PMGAA in full on or before the applicable due date, CARRIER shall be responsible for interest on the unpaid fee or charge at the rate of EIGHTEEN PERCENT (18%) per annum from the due date until payment in full is made. In addition, in the event any payment is received more than TEN (10) days after the due date, a late penalty of TEN PERCENT (10%) of the amount of such delinquent amount shall be due and payable in addition thereto.

4.11.3 Books and Records. CARRIER shall maintain permanent books, records and ledgers accurately reflecting the total passengers, and total number of monthly aircraft landings for all aircraft subject to a landing fee indicating the make, type (including model designation), registration number, maximum certificated gross landing weight, and arrival and departure time of each aircraft involved. These records shall be made available to PMGAA upon request. PMGAA may audit the books, records and ledgers maintained by CARRIER in accordance with this SECTION 4. In the event an audit reveals a deficiency of TWO PERCENT (2%) or greater in the amount of payment made pursuant to this SECTION 4, CARRIER shall not only pay such deficiency but also the cost of any audit performed by PMGAA.

5. REPORTING REQUIREMENTS

5.1 CARRIER shall file with PMGAA written reports for the items specified below no later than the TENTH (10th) day of the calendar month following the month in which the specified activities occurred (the "Due Date"). Such reports shall cover all of CARRIER's Airport activities during said month, and include activity handled by CARRIER for other Air Transportation Companies not having an agreement with PMGAA providing for its own submission of activity data to PMGAA

5.1.1 A complete listing of all of CARRIERS's actual aircraft landings at the Airport, including aircraft type and MGLW; and a listing, by destinations, of the number of flights that qualify under applicable waiver agreements for any landing fee waivers;

5.1.2 A complete listing of CARRIER's Enplaned Passengers and Deplaned Passengers, specified by and including the type of aircraft;

5.1.3 A complete listing, by date and flight number, of CARRIER's commercial cargo loaded and off loaded.

5.2 PMGAA shall have the right to rely on said activity reports in determining rentals and other charges due hereunder, provided, however, CARRIER shall have full responsibility for the accuracy of said reports. Payment deficiencies due to incomplete or inaccurate activity reports shall be subject to interest charges as set forth in SECTION 4.11.2 herein.

5.3 CARRIER shall at all times maintain and keep books, ledgers, accounts or other records wherein are accurately kept all entries reflecting the activity statistics to be reported pursuant to SECTION 5. Such records shall be retained by CARRIER for a period of THREE (3) years subsequent to the activities reported therein, or such other retention period as set forth in 14 CFR Part 249.7, and made available at Mesa, Arizona for audit and/or examination by PMGAA or its duly authorized representative during all normal business hours. CARRIER shall produce such books and records at Mesa, Arizona within THIRTY (30) calendar days of PMGAA's notice to do so or pay all reasonable expenses, including but not limited to, transportation, food, lodging and other related expenses, necessary for an auditor selected by PMGAA to audit said books and records.

5.4 The cost of audit, with the exception of the aforementioned expenses, shall be borne by PMGAA; provided, however, the total cost of said audit shall be borne by CARRIER if either or both of the following conditions exist:

5.4.1 The audit reveals an underpayment of more than TWO PERCENT (2%) of rentals, fees and charges due hereunder, as determined by said audit, and/or

5.4.2 CARRIER has failed to maintain true and complete books, records, accounts and supportive source documents in accordance with SECTION 5.

5.5 Payments. All payments due and payable hereunder shall be paid in lawful money of the United States of America, without set off, by check made payable to the Phoenix-Mesa Gateway Airport Authority and delivered to:

Phoenix-Mesa Gateway Airport Authority
Attn: Accounts Receivable
5835 S. Sossaman Road
Mesa, Arizona 85212-0614

6. INSURANCE

6.1 General. Carrier shall procure and maintain the following types and amounts of insurance for its operations at the Airport throughout the Term of this Agreement and any extension thereto:

Aircraft Liability insurance covering third party bodily injury and property damage, and passenger and contractual liabilities which shall protect and indemnify PMGAA from any and all claims arising in connection with aircraft movement on the Airport in amounts as are customarily carried by a carrier of like kind and size, but in no event less than $250,000,000.00 per occurrence. Such insurance shall also insure against third party liabilities arising from War Risk perils.

Airport Premises Liability insurance third party bodily injury and property damage, including coverage for "premises/operations," "products and completed operations," "host liquor" and "blanket contractual" liabilities in an amount not less than $250,000,000.00 per occurrence.

Comprehensive Automobile Liability insurance for all owned, non-owned and hired vehicles operated airside on the Airport that are assigned to or used in the performance of commercial activities in the amount of $25,000,000.00 per occurrence or combined single limit. If any hazardous materials are transported in connection with Carrier's business operations at or on the Airport, an MSC 90 endorsement shall be required in addition thereto.

Workers' Compensation insurance, as required by law, and *Employer's Liability* insurance in the amount of $1,000,000.

6.2 Additional Insurance. At any time during the Term of this Agreement, including any extension thereto, PMGAA may, in its reasonable determination decide that the insurance coverage required by this SECTION 6 is no longer adequate, require CARRIER to increase its coverage to commercially reasonable amounts.

6.3 Blanket Insurance. CARRIER's insurance obligations under this Agreement may be satisfied by means of the general corporate "blanket" policies carried by it and evidenced by the insurance

carrier's standard certificates thereof.

6.3.1 Use of Proceeds. Proceeds of any liability and property damage insurance required under this SECTION 6 shall be applied toward extinguishing, satisfying or remedying the liability, loss or damage with respect to which such proceeds may be paid.

6.4 Indemnity. To the fullest extent permitted by law CARRIER (as "indemnitor") shall indemnify, defend, hold and save PMGAA, its board members, and its member governments, officers, officials, employees, and agents (as "indemnitee") free and harmless of, for, from and against any and all Losses caused in whole or in part by (a) any act or omission of CARRIER (including indemnitor's officers, officials, agents, employees, contractors or invitees), (b) CARRIER's operations at the Airport, (c) CARRIER's violations of said Security Program caused, or alleged to be caused, by the acts, errors or omissions of CARRIER, its employees, agents, invitees or contractors, or (d) any default by CARRIER hereunder. This indemnification shall exclude responsibility for any consequential damages and for claims arising by reason of the negligent or wrongful act of PMGAA or its employees, contractors or agents. For purposes hereof "Losses" shall mean any and all losses, liabilities, judgments, suits, claims, damages, fines, penalties, costs and expenses (including reasonable attorneys and consultant fees, investigation costs, monitoring costs, remediation costs, and court costs), of any kind or nature." In carrying out the defense of any claim subject to its indemnification obligations hereunder, CARRIER shall use counsel reasonably acceptable to PMGAA.

6.5 Insurance Form. Each insurance policy obtained pursuant to this SECTION 6, except for Workers' Compensation and Employer Liability policies, shall: (i) name PMGAA as a certificate holder or an additional insured to the extent of Operator's contractual indemnity obligations; (ii) contain a provision that written notice of cancellation or modification thereof shall be given to PMGAA not less than THIRTY (30) calendar days before such cancellation or modification takes effect (TEN (10) days in the case of nonpayment of premium); and (iii) contain a waiver of subrogation in favor of PMGAA. Operator shall not permit any insurance policy to be canceled or modified without PMGAA's written consent unless equivalent replacement policies are issued with no lapse in coverage. All policies shall be obtained from insurance companies licensed to do business in the State of Arizona and possessing a rating of at least A - VII or higher from the A.M. Best Company, or an equivalent rating approved by PMGAA.

7. DISABLED OR ABANDONED AIRCRAFT.

7.1 Should any aircraft owned or operated by CARRIER, through accident or for any other reason, become disabled or be abandoned in any area which could interfere with the continuous, normal operations of any of the runways, taxiways and airfield facilities at the Airport, CARRIER shall, at CARRIER'S sole cost and expense

7.1.1 Immediately remove said aircraft to such location as may be designated by PMGAA, unless such aircraft is required to remain in place pending investigation by the appropriate regulatory agency or agencies of the federal government; and

7.1.2 In the event of any accident where federal investigation in place is required, immediately upon receiving clearance to do so from the appropriate federal agency, remove said aircraft and any wreckage or debris resulting therefrom to the area(s) designated by said federal agency authorizing such removal, otherwise, such aircraft wreckage and debris shall be immediately removed from the Airport or stored at a location approved by PMGAA.

7.2 Should CARRIER fail to proceed immediately to remove disabled aircraft, or should aircraft owned or operated by CARRIER be abandoned on the Airport, PMGAA shall have the right to remove such aircraft by any means PMGAA deems necessary under the circumstances, and CARRIER shall, to the fullest extent permitted by law, indemnify, defend, keep and hold PMGAA, its members, board of directors, officers, agents, officials, servants, employees and contractors harmless from and against any and all claims, costs, loss, liability, actions, suits, proceedings, damage or expense (including costs of suit and attorneys' fees and expenses) incurred by PMGAA or claimed by anyone

by reason of removal of said aircraft, injury to persons or property or damages to such aircraft caused by such removal, as well as storage costs therefor. CARRIER shall reimburse PMGAA for any costs incurred by PMGAA in removing and storing any aircraft, at PMGAA's sole discretion, and as provided herein as performing authorized maintenance on its aircraft on the Airport.

7.3 Sound and Noise Suppression. CARRIER shall comply fully with Airport Rules & Regulations and Minimum Standards when performing high-speed engine test operations at the Airport, if any, and SECTION 10.3 to mitigate excessive ambient sound and/or noise that may be generated incident thereto and that have or may have an adverse effect on other Airport tenant operations and the surrounding community. CARRIER acknowledges and agrees that the Airport Rules & Regulation for such test operations may change from time to time at PMGAA's sole and absolute discretion. CARRIER also agrees that any costs associated with compliance with Airport Rules & Regulations for sound or noise suppression or mitigation shall be borne solely by CARRIER.

8. ENVIRONMENTAL COMPLIANCE.

CARRIER shall at all times during the existence of this Agreement promptly observe and comply with applicable Federal, State, and local laws, regulations, rules and standards concerning the environment (collectively, the "Environmental Laws"). CARRIER shall be responsible for collecting, storing, recycling and/or disposing of its hazardous or toxic waste, if any, in compliance with the Environmental Laws governing the storage and disposal of hazardous or toxic waste. CARRIER shall ensure its employees and agents are aware that domestic drains, storm drains, or industrial waste drains shall not be used to dispose of gasoline, hydraulic fluid, solvents, concentrated cleaning agents or any other hazardous or toxic materials. Where so required, PMGAA may act on behalf of CARRIER, as and if appropriate, to dispose of CARRIER's waste, sign manifests on behalf of CARRIER and assign such disposal to CARRIER's EPA identification (ID) number. CARRIER shall repay PMGAA the costs and fees for doing so within TEN (10) days of demand therefor. CARRIER shall, to the fullest extent permitted by law, indemnify, defend and hold PMGAA, its members, board of directors, officers, agents, officials, employees, and contractors harmless from and against any and all claims, costs, loss, liability, actions, suits, proceedings, damage or expense including, but not limited to, the costs of suit and reasonable attorneys' fees and expenses of any nature whatsoever arising out of or related to CARRIER's failure to comply with the Environmental Laws.

9. TAXES AND RELATED IMPOSITIONS.

In the event any governmental authority shall impose a tax or imposition based upon this Agreement, upon CARRIER or its aircraft, or upon payments to be made hereunder, CARRIER shall pay such amounts either to PMGAA or the appropriate governmental authority on or before any delinquency date. Specifically, CARRIER shall be responsible for any transaction privilege, sales, excise or other similar tax except income taxes as a result of this Agreement. CARRIER shall also pay all licensing or permitting fees necessary or required by law for the conduct of its aeronautical operations hereunder, or any other matters hereunder. CARRIER shall be responsible for any property interests created hereunder, which may constitute or be deemed to be a possessory interest for purposes of taxation.

10. RULES, REGULATIONS AND MINIMUM STANDARDS.

10.1 CARRIER shall at all times comply with all federal, State and local laws and ordinances, rules and regulations, which are applicable to its operations, or the operation, management, maintenance, or administration of the Airport, including but not limited to the Americans with Disabilities Act, and all laws, ordinances, rules and regulations adopted after the Effective Date. CARRIER shall at all times comply with all Airport Rules and Regulations, and Minimum Standards established by PMGAA regarding operation and maintenance of the Airport, copies of which are attached as **EXHIBIT B** and are incorporated herein. CARRIER will be responsible for controlling and preventing disruptive pedestrian and vehicle traffic, if any, associated with its activities on the Airport. CARRIER also shall display or provide copies to PMGAA of any permits, licenses, or other evidence of compliance with laws upon request.

10.2 PMGAA shall operate the Airport in compliance with all applicable Federal state and local

laws, ordinances, rules and regulations, and shall enforce the Airport Rules and Regulations established by it to ensure the effective and orderly operation of the Airport, and to prevent any disruption caused by CARRIER's operations at and on the Airport.

10.3 CARRIER acknowledges receipt of and agrees to abide by PMGAA's *Fly Friendly* noise abatement procedures and will provide such information to flight crews and/or students, post the information in CARRIER's flight planning area, and use the procedures to the extent possible when consistent with safety and air traffic control directives.

11. DEFAULT; TERMINATION BY PMGAA

11.1 General Grounds. PMGAA may terminate this Agreement upon the occurrence of any of the following events:

11.1.1 Failure of CARRIER to perform any of its obligations under this Agreement, or any other contract, license or agreement between the Parties, which failure shall not be cured within FIVE (5) business days after delivery by PMGAA to CARRIER of a written notice of such failure.

11.1.2 The filing of any lien against the Airport because of any act or omission of CARRIER which is not discharged within FIVE (5) business days of receipt of actual notice of such lien by CARRIER.

CARRIER may terminate this Agreement upon the occurrence of any of the following events:

11.1.3 Failure of PMGAA to perform any of its obligations under this Agreement, or any other contract, license or agreement between the Parties, which failure shall not be cured within FIVE (5) business days after delivery by CARRIER to PMGAA of a written notice of such failure.

11.1.4 The filing of any lien against the CARRIER because of any act or omission of PMGAA which is not discharged within FIVE (5) business days of receipt of actual notice of such lien by PMGAA.

11.2 Failure to Pay Fees. PMGAA may declare CARRIER in default of this Agreement by giving CARRIER FIVE (5) business day's written notice of CARRIER's failure to timely pay any fees or payments due pursuant to this Agreement. If CARRIER fails to cure such payment default within said FIVE (5) business day period, PMGAA may, in its sole discretion, elect to do any one or more than one of the following:

11.2.1 Institute action(s) to enforce this Agreement, or

11.2.2 Terminate this Agreement automatically without further notice to CARRIER, or

11.2.3 Exercise any other remedy allowed by law or equity.

11.3 Failure to Provide Insurance. In the event CARRIER at any time fails to maintain all insurance coverage required by this Agreement, PMGAA shall have the right, upon written notice to CARRIER, to immediately terminate this Agreement or secure the required insurance at CARRIER's expense.

11.4 No Waiver by PMGAA. No waiver by PMGAA of any default by CARRIER in the performance of its obligations under this Agreement shall be deemed to be a waiver of any subsequent default by CARRIER in the performance of any such obligations.

12. GOVERNING LAW; ATTORNEY'S FEES.

The laws of the State of Arizona shall govern this Agreement and the matters set forth therein, without regard to its conflict of law principles. Venue of any action brought under this Agreement shall, at the option of

PMGAA, be in Maricopa County, Arizona. In the event of any litigation or arbitration between PMGAA and CARRIER arising under this Agreement, the successful party shall be entitled to recover its attorney's fees, expert witness fees and other costs incurred in connection with such litigation or arbitration.

13. NONWAIVER.

PMGAA's right to revoke this Agreement shall be absolute. Any election by PMGAA to not enforce any provision of this Agreement, or any failure by PMGAA to exercise any of the remedies allowed PMGAA under this Agreement, shall not operate as a waiver by PMGAA of any of its right hereunder.

14. ASSIGNMENT.

CARRIER shall not assign or transfer any right or interest in this Agreement.

15. OTHER RESTRICTIONS.

CARRIER shall comply with all rules, laws, ordinances, and statues of any governmental authority having jurisdiction over the Airport or the matters provided in this Agreement

16. AIRPORT SECURITY.

PMGAA maintains an approved Airport Security Plan (the "Security Plan") pursuant to 49 CFR Parts 1540 and 1542. CARRIER shall at all times comply with the Security Plan and the written and verbal directives issued by PMGAA supporting the Security Plan

16.1 The CARRIER shall immediately correct physical or procedural deficiencies which are contrary to the Security Plan, security directives, security bulletins, or verbal notifications existing now or in the future. CARRIER is responsible for maintaining security practices, facilities, and perimeter boundaries on their leasehold that meet the security standards of the Security Plan.

16.2 CARRIER shall, to the fullest extent permitted by law, indemnify, defend, and hold PMGAA harmless for, from, and against any violations of the Security Plan committed by any agents, employees, invitees, subcontractors, or independent contractors of the CARRIER.

16.3 CARRIER shall conduct and document all self-audits and self-inspections as required by the TSA or PMGAA and make such audits available for inspection.

16.4 CARRIER shall designate a primary security coordinator to receive security -related briefings, bulletins, and sensitive security information ("SSI").

16.5 PMGAA reserves the right to modify the Security Plan from time-to-time, as necessary, or as directed by the TSA

17. AIRPORT SECURITY BADGE

17.1 Carrier employees/contractors that require a badge shall be obligated to complete all training and comply with all security requirements and directives issued by PMGAA, TSA, or other entities having jurisdiction at PMGAA.

17.2 CARRIER and employees/contractors shall comply with all security-related audits, inspection, and screenings conducted by PMGAA

17.3 CARRIER will immediately notify PMGAA and promptly return badges to the Airport Badging Office when badge holders terminate employment, the badge is no longer needed, or the employee/contractor is on extended leave

17.4 Misuse of a badge or security procedures will bring about punitive action including suspension or revocation of one or all badges.

18. NOTICE.

18.1 All notices required or permitted under this Agreement shall not be deemed effective unless personally delivered or mailed by certified mail, return receipt requested, postage prepaid, or

by reputable commercial overnight courier service, to the following addresses:

TO PMGAA:	Phoenix-Mesa Gateway Airport Authority Attn.: Business Development Department 5835 S. Sossaman Road Mesa, Arizona 85212-0914
TO CARRIER:	Sun Country, Inc. Attn: Senior Director of Airport Affairs 2005 Cargo Road Minneapolis, MN 55450

18.2 Notices shall be deemed to have been received TWO (2) business days after the date of mailing, if given by certified mail, or upon actual receipt if personally delivered or if given by reputable commercial overnight courier service. Any Party may designate in writing a different address for notice purposes pursuant to this SECTION.

19. PRIOR AGREEMENTS AND PERMITS.

Upon execution hereof, this Agreement shall supersede and cancel any prior agreements between PMGAA and CARRIER with respect to the business activities governed hereby. CARRIER shall not construe PMGAA's execution of this Agreement as a waiver of any prior indebtedness or obligation to PMGAA under any prior agreement or license, nor does PMGAA waive any claim or cause of action arising therefrom.

20. CORPORATE AUTHORIZATION.

In executing this Agreement, CARRIER represents and warrants to PMGAA that if CARRIER is a corporation, CARRIER has obtained and been granted the full right, power and authority to enter into this Agreement.

21. MISCELLANEOUS.

21.1 Personal Liability. No member of or employee of either Party shall be charged personally or held contractually liable by or to the other Party under any term or provision of this Agreement because of any breach thereof or because of its execution or attempted execution.

21.2 No Waiver. No provision of this Agreement may be waived or modified except by a writing signed by the Party against whom such waiver or modification is sought.

21.3 Non-Waiver of Rights. No waiver or default by PMGAA of any of the terms, conditions, covenants or agreements hereof to be performed, kept or observed by CARRIER shall be construed or act as a waiver of any subsequent default of any of the terms, covenants, conditions or agreements herein contained to be performed, kept or observed by CARRIER, and PMGAA shall not be restricted from later enforcing any of the terms and conditions of this Agreement.

21.4 Amendment. Only a written instrument executed by the Parties may amend this Agreement.

21.5 Invalid Provisions. Should any provision of this Agreement or any application thereof be held invalid by a court of competent jurisdiction, the remainder of this Agreement shall not be affected thereby, unless one or both Parties would be substantially and materially prejudiced.

21.6 Headings. The headings contained herein are for convenience in reference only and are not intended to define or limit the scope of this Agreement or any term thereof.

21.7 Entire Agreement. This Agreement, including **EXHIBITS** attached hereto at the time of its execution, constitutes the entire agreement between the Parties hereto and supersedes all prior negotiations, understandings and agreements between the Parties concerning such matters.

22. **INCORPORATION OF RECITALS.**

The recitals set forth above are acknowledged by the Parties to be true and correct and are incorporated herein by this reference.

IN WITNESS WHEREOF, the Parties have executed this Agreement to be effective on the Effective Date specified above.

FOR PMGAA:	FOR CARRIER:
_____	_____
By: J. Brian O'Neill, A.A.E	By: R. Brian Davis
Its: Executive Director/CEO	Its: Vice President Ground Operations
Date Signed: _____	Date Signed 9/2/21

EXHIBIT A

Airport Rates & Charges Schedule

https://www.gatewayairport.com/Documents/DocumentLibrary/Airport%20Rates%20and%20Charges/Airport%20Rates%20and%20Charges%20effective%204-1-21.pdf?Uniqueifier=DBDPXpsWQ0

Airport Fees, Services & Rental Rates

https://www.gatewayairport.com/Documents/DocumentLibrary/ExecDirSect/AirportFeesServicesRentalRates.pdf?Uniqueifier=OqVEKsPQrv

EXHIBIT B

PMGAA Minimum Standards

https://www.gatewayairport.com/Documents/DocumentLibrary/Board%20Policies/Airport%20Minimum%20Standards.pdf?Uniqueifier=ouIVauG2kL

PMGAA Rules & Regulations

https://www.gatewayairport.com/Documents/DocumentLibrary/Board%20Policies/Airport%20Rules%20and%20Regulations%2020-35.pdf?Uniqueifier=ouIVauG2kL

EXHIBIT C

Common Use Facilities Operating Procedures:

https://www.gatewayairport.com/Documents/DocumentLibrary/Regulatory%20Documents/Common%20Use%20Facility%20Op%20Proc%2020-01.pdf?Uniqueifier=CndE5f5EfP

Phoenix-Mesa Gateway Airport Authority
5835 S Sossaman Road
Mesa, Arizona 85212-6014
www.gatewayairport.com

Board Action Item

Resolution 21-38

To: Board of Directors
From: Chuck Odom, Chief Financial Officer
Through: J. Brian O'Neill, A.A.E., Executive Director/CEO
Subject: Airport Rates and Charges- Recommended Revision Effective October 1, 2021
Date: September 21, 2021

Proposed Motion
To adopt the revised Airport Rates and Charges schedule with an effective date of October 1, 2021.

Narrative
In FY21 the U.S. Customs and Border Protection transitioned to full cost recovery for user fee stations. PMGAA is one of those user fee stations. In order to offset this change, we recommend an increase to the inspection fees for international aircraft arrivals.

We propose the Airport Rates & Charges be modified to reflect the below increases.

Category Based on MGLW	U.S. Customs Inspection Fee per Aircraft Arrival
< 5,000	$73.16 increase to $80.00
5,001 – 12,500	$225.10 increase to $250.00
12,501 – 35,000	$315.14 increase to $350.00
35,001 – 100,000	$432.20 increase to $480.00
100,001 – 255,000	$607.77 increase to $670.00
> 255,000	$754.09 increase to $830.00
After-hours appointment minimum 2-hour fee per inspector in addition to the standard charge	$377.05 increase to $415.00
Two hours after the aircraft's scheduled arrival time, each additional 30 minutes required of the U.S. Customs Inspector	$55.71 increase to $61.00

Also, in the body of the Airport Rates and Charges document, the Passenger Terminal /Airfield – Exclusive Use section was removed to allow the terminal office rate to be market driven and not a published rate. Some other descriptions were updated in the document as well.

Fiscal Impact
This proposed change to the U.S. Customs Inspection fees reflects an approximate 10% increase and will help to offset the increases we have seen from the U.S. Customs and Border Protection.

Attachment(s)
Proposed changes to Airport Rates & Charges

RESOLUTION NO. 21-38

WHEREAS, the Phoenix-Mesa Gateway Airport Authority ("Authority"), a joint powers airport authority formed pursuant to Arizona Revised Statute §28-8521 *et seq.* owns and operates the Phoenix-Mesa Gateway Airport ("Airport"); and

WHEREAS the Authority desires to adopt the revised Airport Rates and Charges schedule with an effective date of October 1, 2021.

NOW, THEREFORE, BE IT RESOLVED by the Board of Directors of the Authority as follows:

> **The Board of Directors of the Authority hereby adopts the revised Airport Rates and Charges schedule with an effective date of October 1, 2021. This resolution also authorizes the Chair or Executive Director/CEO to make such additions, deletions, and changes as may be approved by the Chair or Executive Director/CEO, necessary to carry out the purposes and intent of this Resolution.**

Passed and adopted by the Authority this 21st day of September, 2021.

_____
John Giles, Chair

ATTEST:

_____
Misty Johnson, Clerk of the Board

APPROVED AS TO FORM:

_____
Jill Casson Owen, Attorney

Airport Rates and Charges*

Effective October 1, 2021

This schedule of Airport Rates and Charges is subject to updates. For the latest schedule, please visit the Phoenix-Mesa Gateway Airport website at:
http://www.gatewayairport.com/PoliciesDocumentsandForms#BoardPolicies

Signatory Commercial Carriers	Scheduled, FAR Part 121 and 129 operators, with a 90-day rolling average of 90 or more departures per month.		
Non-Signatory Commercial Carriers	Scheduled, FAR Part 121 and 129 operators, with a 90-day rolling average of less than 90 departures per month.		
Aircraft Landing Fee	Signatory Commercial Carriers, $1.32 per 1,000 lbs. maximum gross landing weight (MGLW). Non-Signatory Commercial Carriers, General Aviation and other eligible aircraft $1.98 per 1,000 lbs. MGLW. *Exemptions:* 1. U.S. Government owned aircraft 2. Non-revenue and flight training aircraft up to 12,500 MGLW 3. All based flight training school aircraft		
Aircraft Terminal Use Fee	Signatory Commercial Carriers - $50 per Turn Non-Signatory Commercial Carriers - $75 per Turn		
	Commercial Carriers with no operating agreement, see page 2 Non-Operating Agreement Passenger Terminal – Common Use Areas and Equipment		
Aircraft Parking Fee	**Aircraft Passenger Capacity**	**Signatory**	**Non-Signatory**
	1-69	$ 35	$ 53
	70-250	$ 70	$105
	251 or greater	$100	$150
	Will be assessed for the occupancy of an aircraft parking position for more than 3 hours, including terminal gates and remote parking positions, and for each additional 24 hour period.		
Airport Car Rental Customer Facility Charge (CFC)	$2.50 per vehicle rental day		
Aviation Fuel Flowage Fees	Fuel Flowage Fees are paid to PMGAA by any entity or person dispensing or receiving fuel on the Airport in accordance with PMGAA Aviation Fuel Storage, Dispensing & Handling Guidelines.		
	Signatory Commercial Carriers by agreement		
	Non-Signatory Commercial Carriers - $.05 per gallon		
	All Others - $0.12 per gallon		
Fire Suppression Services	$.50 per year per square foot of floor space + $250.00 set-up charge, billed in monthly installments. 15% of annual fees required as security deposit. South ramp connection fee = $209,746.00		
Parking Rates *Grace Period first 10 minutes	**Fee by Location**	**Rate**	**Daily Maximum Charge**
	Hourly Parking Lot	$1.00 / 30 minutes*	$18.00
	Daily Parking Lot	$1.00 / 30 minutes*	$11.00
	Ray Rd Economy Parking Lot Uncovered	$1.00 / 30 minutes*	$ 7.00
	Ray Rd Economy Parking Lot Covered	$1.00 / 30 minutes*	$11.00

All Airport Rates and Charges may vary due to terms defined in specific agreements.
Late payments are subject to a 1.5% finance charge. Payment terms are net 30 days unless otherwise specified.

	Lost Token Fee with itinerary = Days of Stay x Parking Lot Rate + $20 Lost Token & Admin Fee Lost Token Fee without itinerary (may be adjusted later with proof of itinerary)	$250.00
Passenger Facility Charge (PFC)	$4.50 per enplaned commercial passenger, Per FAA Approved PFC Application; reference Federal Register: (Vol. 79, Number 3)	
Airport Licenses & Permits	Fuel Dispensing Permit	$100.00 per organization, permit valid for 2 years
	Fuel Handling Permit (includes exam)	$15.50 per individual, permit valid for 2 years
	Fuel Storage & Service Equipment Permit	$38.00 per filtration vessel, permit valid for 2 years
Common Use Terminal Equipment	Signatory Commercial Carriers	$1,250 per month
	Non-Signatory Commercial Carriers	$ 500 per month

~~Passenger Terminal/Airfield – Exclusive Use Areas~~

~~Item~~	~~Description~~	~~Amount~~
~~Terminal Office Space~~	~~Exclusive use of airline ticketing and other offices: includes electric, water and maintenance; excludes janitorial services, internet and telephone services~~	~~$32.00 per sq. ft. per year~~
~~Paved Equipment Staging/Storage Area~~	~~Paved staging area in the vicinity of the SIDA in excess of that used during normal aircraft servicing operations~~	~~$ 2.00 per sq. ft. per year~~

Common Use Area - Operational Surcharges

Item	Description	Area	Operation	Surcharge
Operational Surcharges	Charges for exceeding allocated time slots on common use areas	Ticket counter or gate	Occupying a gate after the scheduled allocation time, resulting in aircraft holding or gate change	$200 per hour
		Use of ticket counter or gate without prior permission.		$200 plus regular fees
		Failure to use allocated time slot without 48-hour cancellation notice	Negatively impacting another scheduled carrier or causing Airport to shift resources to accommodate.	$200 plus regular fees

~~Non-Operating Agreement~~ Transient Air Carrier Passenger Terminal – Common Use Areas and Equipment Rates

Item	Description	Aircraft Passenger Capacity	Resources Included	Rate
Full Service	Includes ticket counter(s) and lobby area, secure hold room and boarding area podium, aircraft parking position (2 hours), baggage claim area, and common use computer equipment per flight, as scheduled by Airport Operations. 1 ticket counter = 2 positions	1-69	1 ticket counter, 1 gate podium, 1 shared use hold room, 1 baggage belt, 1 aircraft parking spot	$ 260 per flight
		70-250	2 ticket counters, 1 gate podium, 1 shared use hold room, 1 baggage belt, 1 aircraft parking spot	$ 495 per flight
		251 or greater	3 ticket counters, 2 gate podiums, 2 shared use hold rooms, 1 baggage belt, 1 aircraft parking spot	$ 915 per flight
Ticket Counter and Lobby	Use of 1 ticket counter and shared use of the lobby area for up to 2.5 hours. Includes common use equipment.	1-69	1 ticket counter and lobby	$ 75 per flight
		70-250	2 ticket counters and lobby	$150 per flight

All Airport Rates and Charges may vary due to terms defined in specific agreements.
Late payments are subject to a 1.5% finance charge. Payment terms are net 30 days unless otherwise specified.

		251 or greater	3 ticket counters and lobby	$ 225 per flight
Boarding Gates – Secured Hold Room	Shared use of secured boarding gate area for up to 2 hours and one aircraft parking position. Includes use of gate podium, common use equipment, and one ~~set of aircraft stairs~~ passenger boarding ramp.	1-69	1 gate podium and 1 hold room	$110 per flight
		70-250	1 gate podium and 1 hold room	$220 per flight
		251 or greater	2 gate podiums and 2 hold rooms	$ 440 per flight
Baggage Claim	Use of baggage claim area and baggage delivery belt/slide. Includes aircraft parking position*. * if associated with a live departure within 3 hours of arrival. Otherwise standard aircraft parking fee applies.	1-69	1 belt, oversize slide, aircraft parking*	$ 75 per flight
		70-250	1 belt, oversize slide, aircraft parking*	$125 per flight
		251 or greater	2 belts, oversize slide, aircraft parking*	$ 250 per flight

U.S. Customs and Border Protection

U.S. Customs and Border Protection (CBP) Service User Fees	**Category (based on MGLW)**	**Inspection Fee (per aircraft arrival)**
	<5,000	~~$73.16~~ $80.00
	5,001 – 12,500	~~$225.10~~ $250.00
	12,501 – 35,000	~~$315.14~~ $350.00
	35,001 – 100,000	~~$432.20~~ $480.00
	100,001 – 255,000	~~$607.77~~ $670.00
	> 255,000	~~$754.09~~ $830.00
	Regular service hours are Monday – Friday, 1100 – 1900 hrs. (MST). After-hours by appointment only. For after-hours appointments, there will be a minimum two-hour fee of ~~$377.05~~ $415.00 per inspector in addition to the standard user fee shown above. Two hours after the aircraft's scheduled arrival time, each additional 30 minutes required of the U.S. Customs Inspector will incur a ~~$55.71~~ $61.00 fee above the ~~$377.05~~ $415.00 minimum each.	

Gateway Aviation Services (Fixed Based Operator) Rates and Charges

		Category (based on MGLW)	Monthly Tie-Down Fee (2-month minimum)
Aircraft Open Ramp Tie-Down Fees (Space subject to availability)		<5,000 lbs.	$44.00
		5,001 – 12,500 lbs.	$98.00
		12,501 – 35,000 lbs.	$201.00
		35,001 – 100,000 lbs.	$316.00
		100,001 – 255,000 lbs.	$672.00
		> 255,000 lbs.	$1,321.00
Daily Ramp Fee	Max Gross Landing Weight	Rate	A purchase of the following fuel gallon minimums will waive the first Daily Ramp Fee per visit. A purchase of a meal from the restaurant located in the Gateway Aviation Center will equate to a $20.00 credit applicable to the first Daily Ramp Fee per visit.
	<5000	$20.00	10
	5,001-12,500	$30.00	75
	12,501-35,000	$90.00	150
	35,001-100,000	$200.00	200
	100,001-255,000	$300.00	500
	>255,001	$500.00	1,000

Phoenix-Mesa Gateway Airport Authority
5835 S Sossaman Road
Mesa, Arizona 85212-6014
www.gatewayairport.com

Board Action Item

Re: Resolution 21-39

To: Board of Directors
From: Shea Joachim, CEcD, Business Development Director
Through: J. Brian O'Neill, A.A.E., Executive Director/CEO
Subject: Facility Lease Agreement with the Transportation Security Administration
Date: September 21, 2021

Proposed Motion

To authorize a Facility Lease Agreement with the Transportation Security Administration for a portion of the facilities located at 6033-2, 6033-5, and 5803 S. Sossaman Road. The lease term is three (3) years, commencing October 1, 2021, with two (2) additional one-year renewal options.

Narrative

The Transportation Security Administration (TSA) is an agency of the U.S. Department of Homeland Security that has authority over the security of the traveling public in the United States. The TSA has a need for additional office, training, and break room space within the terminal complex to accommodate its workforce stationed at the Airport.

Agreement Term and Rate

This agreement has a term of three (3) years and offers two (2) one-year renewal options. The lease will commence on October 1, 2021.

The lease space is divided into two Blocks. Block A located at 6033-2 and 6033-5 S. Sossaman Road has an initial lease rate for years one thru three of $3,393 per month, or $36 per sq. ft. per year for approximately 1,131 sq. ft. Block B located at 5803 S. Sossaman Road has an initial lease rate for years one thru three of $2,413 per month, or $17.78 per sq. ft. per year for approximately 1,629 sq. ft. The combined initial lease rate for Blocks A and B is $5,806 per month, or $69,672 per year.

Attachment(s)

Facility Lease

RESOLUTION NO. 21-39

WHEREAS, the Phoenix-Mesa Gateway Airport Authority ("Authority"), a joint powers airport authority formed pursuant to Arizona Revised Statute §28-8521 *et seq.* owns and operates the Phoenix-Mesa Gateway Airport ("Airport"); and

WHEREAS the Authority desires to authorize a Facility Lease Agreement with the Transportation Security Administration for a portion of the facilities located at 6033-2, 6033-5, and 5803 S. Sossaman Road. The lease term is three (3) years, commencing October 1, 2021, with two (2) additional one-year renewal options

NOW, THEREFORE, BE IT RESOLVED by the Board of Directors of the Authority as follows:

> **The Board of Directors of the Authority hereby authorizes a Facility Lease Agreement with the Transportation Security Administration for a portion of the facilities located at 6033-2, 6033-5, and 5803 S. Sossaman Road. The lease term is three (3) years, commencing October 1, 2021, with two (2) additional one-year renewal options. This resolution also authorizes the Chair or Executive Director/CEO to make such additions, deletions, and changes as may be approved by the Chair or Executive Director/CEO, necessary to carry out the purposes and intent of this Resolution.**

Passed and adopted by the Authority this 21st day of September, 2021.

_____
John Giles, Chair

ATTEST:

_____
Misty Johnson, Clerk of the Board

APPROVED AS TO FORM:

_____
Jill Casson Owen, Attorney

LEASE NO. GS-09P-LAZ00799

A. This Lease is made and entered into between

PHOENIX MESA GATEWAY AIRPORT AUTHORITY

(Lessor), whose principal place of business is **5835 S. SOSSAMAN ROAD, MESA, AZ 85212** and whose interest in the Property described herein is that of Fee Owner, and

The United States of America

(Government), acting by and through the designated representative of the General Services Administration (GSA), upon the terms and conditions set forth herein.

B. Witnesseth**:** The parties hereto, for the consideration hereinafter mentioned, covenant and agree as follows:

Lessor hereby leases to the Government the Premises described herein, being all or a portion of the Property located at

6033-2, 6033-5, and 5803 S. SOSSAMAN ROAD
MESA, AZ 85212-6020

and more fully described in Section 1 and Exhibit **A,** together with rights to the use of parking and other areas as set forth herein, to be used for such purposes as determined by GSA.

C. LEASE TERM

To Have and To Hold the said Premises with its appurtenances for the term beginning upon **October 1st, 2021**, and continuing for aperiod of

5 Years, 3 Years Firm,

subject to termination and renewal rights as may be hereinafter set forth.

In Witness Whereof**,** the parties to this Lease evidence their agreement to all terms and conditions set forth herein by their signatures below, to be effective as of the date of delivery of the fully executed Lease to the Lessor.

FOR THE LESSOR:

_____

Name: _____

Title:_____

Entity:_____

Date: _____

FOR THE GOVERNMENT:

_____

Name: _____

Title: Lease Contracting Officer

General Services Administration, Public Buildings Service

Date: _____

WITNESSED FOR THE LESSOR BY:

_____

Name: _____

Title: _____

Date: _____

The information collection requirements contained in this Solicitation/Contract, that are not required by the regulation, have been approved by the Office of Management and Budget pursuant to the Paperwork Reduction Act and assigned the OMB Control No. 3090-0163.

SECTION 1 THE PREMISES, RENT, AND OTHER TERMS 3
1.01 THE PREMISES (SEP 2015) 3
1.02 EXPRESS APPURTENANT RIGHTS (SEP 2013) 3
1.03 RENT AND OTHER CONSIDERATION (ON-AIRPORT) (OCT 2020) 3
1.04 TERMINATION RIGHTS (ON-AIRPORT) (SEP 2013) 4
1.05 INTENTIONALLY DELETED 4
1.06 DOCUMENTS INCORPORATED IN THE LEASE (ON-AIRPORT) (OCT 2020) 4
1.07 OPERATING COST BASE (OCT 2016) 4
1.08 LESSOR'S UNIQUE ENTITY IDENTIFIER (OCT 2020) 4

SECTION 2 GENERAL TERMS, CONDITIONS, AND STANDARDS 5
2.01 DEFINITIONS AND GENERAL TERMS (OCT 2016) 5
2.02 AUTHORIZED REPRESENTATIVES (OCT 2016) 5
2.03 WAIVER OF RESTORATION (OCT 2018) 6
2.04 INTENTIONALLY DELETED 6
2.05 RELOCATION RIGHTS (JUN 2012) 6
2.06 RECITALS FOR TRANSPORTATION SECURITY ADMINISTRATION (ON-AIRPORT) (JUN 2012) 6
2.07 ACCEPTANCE OF SPACE AND CERTIFICATE OF OCCUPANCY (ON-AIRPORT) (MAY 2015) 6
2.08 ALTERATIONS PRIOR TO ACCEPTANCE (JUN 2012) 6
2.09 SYSTEM FOR AWARD MANAGEMENT (MAR 2020) 6
2.10 SECURITY UPGRADES DUE TO IMMEDIATE THREAT (APR 2011) 6

SECTION 3 CONSTRUCTION STANDARDS AND SHELL COMPONENTS 7
3.01 BUILDING SHELL REQUIREMENTS (ON-AIRPORT) (SEP 2013) 7
3.02 MEANS OF EGRESS (MAY 2015) 7
3.03 AUTOMATIC FIRE SPRINKLER SYSTEM (SEP 2013) 7
3.04 FIRE ALARM SYSTEM (SEP 2013) 7
3.05 ENERGY INDEPENDENCE AND SECURITY ACT (DEC 2011) 8
3.06 ACCESSIBILITY (FEB 2007) 8
3.07 MECHANICAL, ELECTRICAL, PLUMBING: GENERAL (APR 2011) 8
3.08 RESTROOMS (ON-AIRPORT) (JUN 2012) 8
3.09 HEATING, VENTILATION, AND AIR CONDITIONING (ON-AIRPORT) (APR 2011) 8
3.10 TELECOMMUNICATIONS: LOCAL EXCHANGE ACCESS (ON-AIRPORT) (SEP 2013) 8

SECTION 4 UTILITIES, SERVICES, AND OBLIGATIONS DURING THE LEASE TERM 9
4.01 SERVICES, UTILITIES, AND MAINTENANCE (ON-AIRPORT) (OCT 2020) 9
4.02 PROVISION OF SERVICES, ACCESS, AND NORMAL HOURS FOR AIRPORT OCCUPANCIES (SEP 2013) 9
4.04 RECYCLING (ON-AIRPORT) (JUN 2012) 9
4.05 RANDOLPH-SHEPPARD COMPLIANCE (SEP 2013) 9
4.06 INTENTIONALLY DELETED 9
4.07 INDOOR AIR QUALITY (OCT 2019) 9
4.08 HAZARDOUS MATERIALS (ON-AIRPORT) (OCT 2018) 10
4.09 OCCUPANT EMERGENCY PLANS (OCT 2020) 10

SECTION 5 ADDITIONAL TERMS AND CONDITIONS 11
5.01 LESSOR WILL PROVIDE, INSTALL AND MAINTAIN PROPERTY ACCESS CARDS, AT NO COST, TO ALL TSA EMPLOYEES COVERED UNDER THIS LEASE DOCUMENT 11

SECTION 1 THE PREMISES, RENT, AND OTHER TERMS

1.01 THE PREMISES (SEP 2015)

The Premises are described as follows:

A. Office and Related Space:

Block "A": 1,131 rentable square feet (RSF), yielding 1,131 ANSI/BOMA Office Area (ABOA) square feet (SF) of office and related Space located in Check Point Phase II consisting of 107 RSF and Terminal Phase III consisting of 1,024 RSF of the building as depicted on the floor plan(s) attached hereto as Exhibit A.

Block "B": 1,629 RSF, yielding 1,217 ABOA SF, as depicted on the floor plan(s) attached here to as Exhibit A.

B. Common Area Factor:

Block "A": The Common Area Factor (CAF) is established as 1 percent. This factor, which represents the conversion from ABOA to rentable square feet, rounded to the nearest whole percentage, shall be used for purposes of rental adjustments in accordance with the Payment Clause of the General Clauses.

Block "B": The Common Area Factor (CAF) is established as 1.34 percent. This factor, which represents the conversion from ABOA to rentable square feet, rounded to the nearest whole percentage, shall be used for purposes of rental adjustments in accordance with the Payment Clause of the General Clauses.

1.02 EXPRESS APPURTENANT RIGHTS (SEP 2013)

The Government shall have the non-exclusive right to the use of Appurtenant Areas and shall have the right to post Rules and Regulations Governing Conduct on Federal Property, Title 41, CFR, Part 102-74, Subpart C within such areas. The Government will coordinate with Lessor to ensure signage is consistent with Lessor's standards. Appurtenant to the Premises and included in the Lease are rights to use the following:

A. Parking: Lessor agrees to provide the Government the non-exclusive right for access to and use of surface/outside parking spaces at locations designated by Lessor. Parking is available on a first come, first served basis unless otherwise designated by Lessor or its agents. Lessor is not responsible for any loss of property, damages to vehicle, or personal injury arising out of acts of Government or third parties. In addition, the Lessor shall provide such additional parking spaces as required by the applicable code of the local government entity having jurisdiction over the property.

B. INTENTIONALLY DELETED

1.03 RENT AND OTHER CONSIDERATION (ON-AIRPORT) (OCT 2020)

A. The Government shall pay the Lessor annual rent payable monthly in arrears at the following rates:

Block A				
[redacted]	**10/1/2021 to 9/30/2023**		**10/1/2023 to 9/30/2026**	
	Annual Rent	**Annual Rate / RSF**	**Annual Rent**	**Annual Rate / RSF**
Shell Rental Rate	$40,716.00	$36.00	$42,978.00	$38.00
Operating Costs	$0	$0	$0	$0
Full Service Rate	**$40,716.00**	**$36.00**	$42,978.00	$38.00

Block B				
[redacted]	**10/1/2021 to 9/30/2023**		**10/1/2023 to 9/30/2026**	
	Annual Rent	**Annual Rate / RSF**	**Annual Rent**	**Annual Rate / RSF**
Shell Rental Rate	$28,963.62	$17.78	$31,162.77	$19.13
Operating Costs	$0	$0	$0	$0
Full Service Rate	**$28,963.62**	**$17.78**	**$31,162.77**	**$19.13**

B. INTENTIONALLY DELETED

C. INTENTIONALLY DELETED

D. Rent is subject to adjustment based upon a mutual measurement of the Space upon acceptance, not to exceed **485** ABOA SF. based upon the methodology outlined under the "Payment" clause of GSA Form 3517.

E. INTENTIONALLY DELETED

F. If the Government occupies the Premises for less than a full calendar month, then rent shall be prorated based on the actual number of days of occupancy for that month.

G. Rent shall be paid to Lessor by electronic funds transfer (EFT) in accordance with the provisions of the General Clauses. Rent shall be payable using the EFT information contained in the System for Award Management (SAM). In the event the EFT information changes, the Lessor shall be responsible for providing the updated information to SAM. Failure by the Lessor to maintain an active registration in SAM may result in delay of rental payments until such time as the SAM registration is activated. This registration service is free of charge.

H. The Lessor shall provide to the Government, in exchange for the payment of rental and other specified consideration, the following:

1. The leasehold interest in the Property described herein in the paragraph entitled "The Premises,"

2. INTENTIONALLY DELETED

3. Performance or satisfaction of all other obligations set forth in this Lease; and,

4. All services, utilities, and maintenance required for the proper operation of the Property, the Building, and the Premises in accordance with the terms of the Lease, including, but not limited to, all inspections, modifications, repairs, replacements, and improvements required to be made thereto to meet the requirements of this Lease.

1.04 TERMINATION RIGHTS (ON-AIRPORT) (SEP 2013)

A. The Government may terminate this Lease, in whole or in part, at any time during after 10/1/2024 with **60** days' prior written notice to the Lessor if (i) regularly scheduled commercial air services cease, (ii) the airport opts to replace TSA screeners with private contractors, (iii) the checkpoint supported by the leased Space is closed, or (iv) the Government reduces its presence at the airport due to a reduction in enplanements. The effective date of the termination shall be the day following the expiration of the required notice period or the termination date set forth in the notice, whichever is later. No rental shall accrue after the effective date of termination.

B. INTENTIONALLY DELETED
1.05 INTENTIONALLY DELETED

1.06 DOCUMENTS INCORPORATED IN THE LEASE (ON-AIRPORT) (OCT 2020)

The following documents are attached to and made part of the Lease:

DOCUMENT NAME	NO. OF PAGES	EXHIBIT
Floor Plan(s)	2	A
GSA Form 3517B, General Clauses (REV 10/20)	17	B

1.07 INTENTIONALLY DELETED

1.08 LESSOR'S UNIQUE ENTITY IDENTIFIER (OCT 2020)

Lessor's Unique Entity Identifier (currently Dun & Bradstreet DUNS Number): **848653580**
.

SECTION 2 GENERAL TERMS, CONDITIONS, AND STANDARDS

2.01 DEFINITIONS AND GENERAL TERMS (OCT 2016)

Unless otherwise specifically noted, all terms and conditions set forth in this Lease shall be interpreted by reference to the following definitions, standards, and formulas:

A. Appurtenant Areas. Appurtenant Areas are defined as those areas and facilities on the Property that are not located within the Premises, but for which rights are expressly granted under this Lease, or for which rights to use are reasonably necessary or reasonably anticipated with respect to the Government's enjoyment of the Premises and express appurtenant rights.

B. INTENTIONALLY DELETED

C. Building. Building(s) situated on the Property in which the Premises are located .

D. INTENTIONALLY DELETED

E. Common Area Factor. The "Common Area Factor" (CAF) is a conversion factor determined by the Building owner and applied by the owner to the ABOA SF to determine the RSF for the leased Space. The CAF is expressed as a percentage of the difference between the amount of rentable SF and ABOA SF, divided by the ABOA SF. For example, 11,500 RSF and 10,000 ABOA SF will have a CAF of 15% [(11,500 RSF-10,000 ABOA SF)/10,000 ABOA SF]. For the purposes of this Lease, the CAF shall be determined in accordance with the applicable ANSI/BOMA standard for the type of space to which the CAF shall apply.

F. Contract. Contract shall mean this Lease.

G. Contractor. Contractor shall mean Lessor.

H. Days. All references to "day" or "days" in this Lease shall mean calendar days, unless specified otherwise.

I. FAR. All references to the FAR shall be understood to mean the Federal Acquisition Regulation, codified at 48 CFR Chapter 1.

J. Firm Term/Non-Firm Term. The Firm Term is that part of the Lease term that is not subject to termination rights. The Non-Firm Term is that part of the Lease term following the end of the Firm Term.

K. GSAR. All references to the GSAR shall be understood to mean the GSA supplement to the FAR, codified at 48 CFR Chapter 5.

L. Lease Term Commencement Date. The date on which the Lease term commences.

M. Lease Award Date. The date the LCO executes the Lease and mails or otherwise furnishes written notification of the executed Lease to the successful Offeror (date on which the parties' obligations under the Lease begin).

N. Premises. The Premises are defined as the total Office Area or other type of Space, together with all associated common areas, described in Section 1 of this Lease, and delineated by plan in the attached exhibit. Parking and other areas to which the Government has rights under this Lease are not included in the Premises.

O. Property. The Property is defined as the land and Buildings in which the Premises are located, including all Appurtenant Areas (e.g., parking areas) to which the Government is granted rights.

P. Rentable Space or Rentable Square Feet (RSF). Rentable Space is the area for which a tenant is charged rent. It is determined by the Building owner and may vary by city or by building within the same city. The Rentable Space may include a share of Building support/common areas such as elevator lobbies, Building corridors, and floor service areas. Floor service areas typically include restrooms, janitor rooms, telephone closets, electrical closets, and mechanical rooms. The Rentable Space does not include vertical building penetrations and their enclosing walls, such as stairs, elevator shafts, and vertical ducts. Rentable Square Feet is calculated using the following formula for each type of Space (e.g., office, warehouse, etc.) included in the Premises: ABOA SF of Space x (1 + CAF) = RSF.

Q. Space. The Space shall refer to that part of the Premises to which the Government has exclusive use, such as Office Area, or other type of Space. Parking areas to which the Government has rights under this Lease are not included in the Space.

R. Office Area. For the purposes of this Lease, Space shall be measured in accordance with the standard (Z65.1-1996) provided by American National Standards Institute/Building Owners and Managers Association (ANSI/BOMA) for Office Area, which means "the area where a tenant normally houses personnel and/or furniture, for which a measurement is to be computed." References to ABOA mean ANSI/BOMA Office Area.

S. Working Days. Working Days shall mean weekdays, excluding Saturdays and Sundays and Federal holidays.

2.02 AUTHORIZED REPRESENTATIVES (OCT 2016)

Signatories to this Lease shall have full authority to bind their respective principals with regard to all matters relating to this Lease. No other persons shall be understood to have any authority to bind their respective principals, except to the extent that such authority may be explicitly delegated by notice to the other party, or to the extent that such authority is transferred by succession of interest. The Government shall have the right to substitute its Lease Contracting Officer (LCO) by notice, without an express delegation by the prior LCO.

2.03 WAIVER OF RESTORATION (OCT 2018)

Lessor shall have no right to require the Government to restore the Premises upon expiration or earlier termination (full or partial) of the Lease, and waives all claims against the Government for waste, damages, or restoration arising from or related to (a) the Government's normal and customary use of the Premises during the term of the Lease (including any extensions thereof), as well as (b) any initial or subsequent alteration to the Premises regardless of whether such alterations are performed by the Lessor or by the Government. At its sole option, the Government may abandon property in the Space following expiration or earlier termination (full or partial) of the Lease, in which case the property will become the property of the Lessor and the Government will be relieved of any liability in connection therewith.

2.04 INTENTIONALLY DELETED

2.05 RELOCATION RIGHTS (JUN 2012)

If it becomes necessary in the orderly development of the Airport, Lessor may require the relocation of Premises to other space at the Airport which, in the reasonable judgment of Lessor, is similar and suitable for the purposes for which this Lease is entered as such purposes are set forth herein. Should such relocation be necessary, the Lessor shall provide the Government a minimum of 120 days prior written notice. Lessor shall be responsible for all costs for such relocation, including all costs for moving furniture, office equipment, telephone and data lines, and any other costs associated with replicating necessary operational features provided in the space originally leased. The Airport shall provide such relocated Premises at the same rental rate as the original Premises, unless the new Premises are located in an area for which the Airport charges tenants a lower rate, in which event the parties shall negotiate a reduction in the rental rate.

2.06 RECITALS FOR TRANSPORTATION SECURITY ADMINISTRATION (ON-AIRPORT) (JUN 2012)

A. The Transportation Security Administration (TSA) is required, pursuant to 49 U.S.C. 40101—The Aviation and Transportation Security Act (ATSA), to oversee security measures at the Airport.

B. TSA is responsible for airline passenger and baggage screening services at the Airport.

C. The U.S. General Services Administration (GSA), on behalf of TSA, leases certain facilities on the Airport premises for admin istrative offices and/or break rooms in support of airport passenger and baggage screening services by the TSA.

D. Space for TSA to screen passengers and baggage is expressly excluded from this Lease.

2.07 ACCEPTANCE OF SPACE AND CERTIFICATE OF OCCUPANCY (ON-AIRPORT) (MAY 2015)

A. The Lessor shall provide floor plans for the Space and a valid Certificate of Occupancy (C of O), issued by the local jurisdiction, for the intended use of the Government. If the local jurisdiction does not issue C of O's or if the C of O is not available, the Lessor may satisfy this condition by providing a report prepared by a licensed fire protection engineer that verifies that the Space complies with all applicable local fire protection and life safety codes and ordinances and all fire protection and life safety-related requirements of this Lease.

B. Neither the Government's acceptance of the Premises for occupancy or acceptance of related appurtenances, nor the Government's occupancy of the Premises, shall be construed as a waiver of any requirement or right of the Government under this lease, or as otherwise prejudicing the Government with respect to any such requirement or right, or as an acceptance of any latent defect or condition.

2.08 ALTERATIONS PRIOR TO ACCEPTANCE (JUN 2012)

The Government's rights stated under the General Clause "Alterations" also apply to initial build-out of the Premises.

2.09 SYSTEM FOR AWARD MANAGEMENT (MAR 2020)

The Offeror must have an active registration in the System for Award Management (SAM), via the Internet at, https:// www.sam.gov/SAM/ prior to the Lease Award Date. Registration must be for purposes of "All Awards" and include completion of all required representations and certifications within SAM. Registration must be active throughout the life of the Lease. To remain active, the Offeror/Lessor is required to update or renew its registration annually. The Government will not process rent payments to Lessors without an active registration in SAM. No change of ownership of the leased Premises will be recognized by the Government until the new owner registers in SAM.

2.10 SECURITY UPGRADES DUE TO IMMEDIATE THREAT (APR 2011)

The Government reserves the right, at its own expense and with its own personnel, to heighten security in the Building under Lease during heightened security conditions due to emergencies such as terrorist attacks, natural disaster, and civil unrest.

SECTION 3 CONSTRUCTION STANDARDS AND SHELL COMPONENTS

3.01 BUILDING SHELL REQUIREMENTS (ON-AIRPORT) (SEP 2013)

A. The Building Shell shall be maintained in accordance with the standards set forth herein. For pricing, fulfillment of all requirements not specifically designated as operating costs or other rent components as indicated shall be deemed included in the Shell Rent.

B. Base structure and Building enclosure components shall be complete. All common areas accessible by the Government, such as lobbies, fire egress corridors and stairwells, elevators, garages, and service areas, shall be complete. Restrooms shall be complete and operational. All installed Building shell components, including but not limited to, heating, ventilation, and air conditioning (HVAC), electrical, ceilings, sprinklers, etc. shall be furnished. Circulation corridors are provided as part of the base Building only on multi-tenanted floors where the corridor is common to more than one tenant. On single tenant floors, only the fire egress corridor(s) necessary to meet code is provided as part of the shell.

3.02 MEANS OF EGRESS (MAY 2015)

A. Prior to occupancy, the Premises and any parking garage areas shall meet or will be upgraded to meet, either the applicable egress requirements in the National Fire Protection Association, Life Safety Code (NFPA 101), or the International Code Council, International Building Code (IBC), each current as of the Lease Award Date, or use an alternative approach or method that achieves an equivalent level of safety deem ed acceptable by the Government.

B. The Space shall have unrestricted access to a minimum of two remote exits on each floor of Government occupancy.

C. Interlocking or scissor stairs located on the floor(s) where Space is located shall only count as one exit stair.

D. A fire escape located on the floor(s) where Space is located shall not be counted as an approved exit stair.

E. Doors shall not be locked in the direction of egress unless equipped with special locking hardware in accordance with requirements of NFPA 101 or the IBC.

3.03 AUTOMATIC FIRE SPRINKLER SYSTEM (SEP 2013)

A. Any portion of the Space located below-grade, including parking garage areas, and all areas in a Building referred to as "hazardous areas" (defined in National Fire Protection Association (NFPA) 101) that are located within the entire Building (including non-Government areas) shall be protected by an automatic fire sprinkler system or an equivalent level of safety.

B. For Buildings in which any portion of the Space is on or above the sixth floor, then, at a minimum, the Building up to and including the highest floor of Government occupancy shall be protected by an automatic fire sprinkler system or an equivalent level of safety.

C. For Buildings in which any portion of the Space is on or above the sixth floor, and lease of the Space will result, either individually or in combination with other Government Leases in the Building, in the Government leasing 35,000 or more ANSI/BOMA Office Area SF of Space in the Building, then the entire Building shall be protected throughout by an automatic fire sprinkler system or an equivalent level of safety.

D. Automatic fire sprinkler system(s) shall be installed in accordance with the requirements of NFPA 13, Standard for the Installation of Sprinkler Systems that was in effect on the actual date of installation.

E. Automatic fire sprinkler system(s) shall be maintained in accordance with the requirements of NFPA 25, Standard for the Inspection, Testing, and Maintenance of Water-based Fire Protection Systems (current as of the Lease Award Date).

F. "Equivalent level of safety" means an alternative design or system (which may include automatic fire sprinkler systems), based upon fire protection engineering analysis, which achieves a level of safety equal to or greater than that provided by automatic fire sprinkler systems.

3.04 FIRE ALARM SYSTEM (SEP 2013)

A. A Building-wide fire alarm system shall be installed in the entire Building in which any portion of the Space is located on the 3rd floor or higher.

B. The fire alarm system shall be installed in accordance with the requirements of NFPA 72, National Fire Alarm and Signaling Code that was in effect on the actual date of installation.

C. The fire alarm system shall be maintained in accordance with the requirements of NFPA 72, National Fire Alarm and Signaling Code (current as of the Lease Award Date).

D. The fire alarm system shall transmit all fire alarm signals to the local fire department via any of the following means: directly to the local fire department, to the (911) public communications center, to a central station, to a remote supervising station, or to a proprietary supervising station.

E. If the Building's fire alarm control unit is over 25 years old as of the Lease Award Date, Lessor shall install a new fire alarm system in accordance with the requirements of NFPA 72, National Fire Alarm and Signaling Code (current as of the Lease Award Date), prior to Government acceptance and occupancy of the Space.

3.05 ENERGY INDEPENDENCE AND SECURITY ACT (DEC 2011)

A. The Energy Independence and Security Act (EISA) establishes the following requirements for Government Leases in Buildings that have not earned the ENERGY STAR® Label conferred by the Environmental Protection Agency (EPA) within one year prior to the due date for final proposal revisions ("most recent year").

B. If this Lease was awarded under any of EISA's Section 435 statutory exceptions, the Lessor shall either:

1. Earn the ENERGY STAR® Label prior to acceptance of the Space (or not later than one year after the Lease Award Date of a succeeding or superseding Lease); or

2. Complete energy efficiency and conservation improvements if any, agreed to by Lessor in lieu of earning the ENERGY STAR® Label prior to acceptance of the Space (or not later than one year after the Lease Award Date of a succeeding or superseding Lease).

C. If this Lease was awarded to a Building to be built or to a Building predominantly vacant as of the due date for final proposal revisions and was unable to earn the ENERGY STAR® label for the most recent year (as defined above) due to insufficient occupancy, but was able to demonstrate sufficient evidence of capability to earn the ENERGY STAR® label, then Lessor must earn the ENERGY STAR® label within 18 months after occupancy by the Government.

3.06 ACCESSIBILITY (FEB 2007)

The Building, leased Space, and areas serving the leased Space shall be accessible to persons with disabilities in accordance with the Architectural Barriers Act Accessibility Standard (ABAAS), Appendices C and D to 36 CFR Part 1191 (ABA Chapters 1 and 2, and Chapters 3 through 10). To the extent the standard referenced in the preceding sentence conflicts with local accessibility requirements, the more stringent shall apply.

3.07 MECHANICAL, ELECTRICAL, PLUMBING: GENERAL (APR 2011)

The Lessor shall provide and operate all Building equipment and systems in accordance with applicable technical publications, manuals, and standard procedures. Mains, lines, and meters for utilities shall be provided by the Lessor. Exposed ducts, piping, and conduits are not permitted in office Space.

3.08 RESTROOMS (ON-AIRPORT) (JUN 2012)

Government employees shall have access to all public restroom facilities for men and women in the Airport terminal at all times without additional payment.

3.09 HEATING, VENTILATION, AND AIR CONDITIONING (ON-AIRPORT) (APR 2011)

A. Temperatures shall conform to local commercial equivalent temperature levels and operating practices to maximize tenant satisfaction. These temperatures shall be maintained throughout the leased Premises and service areas, regardless of outside temperatures, during the hours of operation specified in this Lease. The Lessor shall perform any necessary systems start-up required to meet the commercially equivalent temperature levels prior to the first hour of each day's operation. At all times, humidity shall be maintained below 60 percent relative humidity.

B. The Lessor shall conduct HVAC system balancing after all HVAC system alterations during the term of the Lease and shall make a reasonable attempt to schedule major construction outside of office hours.

C. Normal HVAC systems maintenance shall not disrupt tenant operations.

3.10 TELECOMMUNICATIONS: LOCAL EXCHANGE ACCESS (ON-AIRPORT) (SEP 2013)

A. The Government may elect to contract its own telecommunications (voice, data, video, Internet, or other emerging technologies) service in the Space. The Government may contract with one or more parties to have inside wiring (or other transmission medium) and telecommunications equipment installed.

B. The Lessor shall allow the Government's designated telecommunications providers access to utilize existing Building wiring to connect its services to the Government's Space. If the existing Building wiring is insufficient to handle the transmission requirements of the Government's designated telecommunications providers, the Lessor shall provide access from the point of entry into the Building to the Government's floor Space, subject to any inherent limitations in the pathway involved.

C. The Lessor shall allow the Government's designated telecommunications providers to affix telecommunications antennas (high frequency, mobile, microwave, satellite, or other emerging technologies), subject to weight and wind load conditions, to roof, parapet, or Building envelope as required.

SECTION 4 UTILITIES, SERVICES, AND OBLIGATIONS DURING THE LEASE TERM

4.01 SERVICES, UTILITIES, AND MAINTENANCE (ON-AIRPORT) (OCT 2020)

The Lessor is responsible for providing all utilities necessary for base building and tenant operations and all associated costs are included as a part of the established rental rates. The following services, utilities, and maintenance shall be provided by the Lessor as part of the rental consideration within TSA spaces outlined in Exhibit A (Suites 101,140 and 401).

- ☒ HEAT
- ☒ ELECTRICITY
- ☐ POWER (Special Equip.)
- ☒ WATER (Hot & Cold)
- ☐ SNOW REMOVAL
- ☐ TRASH REMOVAL
- ☐ CHILLED DRINKING WATER
- ☒ AIR CONDITIONING
- ☐ RESTROOM SUPPLIES
- ☐ JANITORIAL SERV. & SUPP.
- ☐ ELEVATOR SERVICE
- ☐ WINDOW WASHING
  Frequency
- ☐ CARPET CLEANING
  Frequency
- ☒ INITIAL & REPLACEMENT LAMPS, TUBES & BALLASTS
- ☒ PAINTING FREQUENCY
  Space Every 5 years
  Public Areas _____
- ☐ OTHER (Specify below)
  _____

The Lessor shall have an onsite building superintendent or a locally designated representative available to promptly respond to deficiencies, and immediately address all emergency situations.

4.02 PROVISION OF SERVICES, ACCESS, AND NORMAL HOURS FOR AIRPORT OCCUPANCIES (SEP 2013)

The Government shall have access to the Premises and its Appurtenant Areas at all times without additional payment, including the use, during other than normal hours, of necessary services and utilities such as elevators, restrooms, lights, and electric power. Cleaning shall be performed after tenant working hours unless daytime cleaning is specified as a special requirement elsewhere in this Lease. Janitorial Services shall not be required on weekends or Federal holidays. Services, maintenance, and utilities shall be provided from **4 AM to 10 PM,**

4.03 MAINTENANCE AND TESTING OF SYSTEMS (SEP 2013)

A. The Lessor is responsible for the total maintenance and repair of the leased Premises. Such maintenance and repairs include the site and private access roads. All equipment and systems shall be maintained to provide reliable, energy efficient service without unusual interruption, disturbing noises, exposure to fire or safety hazards, uncomfortable drafts, excessive air velocities, or unusual emissions of dirt. The Lessor's maintenance responsibility includes initial supply and replacement of all supplies, materials, and equipment necessary for such maintenance. Maintenance, testing, and inspection of appropriate equipment and systems shall be done in accordance with current applicable codes, and inspection certificates shall be displayed as appropriate. Copies of all records in this regard shall be forwarded to the Government's designated representative.

B. At the Lessor's expense, the Government reserves the right to require documentation of proper operations, inspection, testing, and maintenance of fire protection systems, such as, but not limited to, fire alarm, fire sprinkler, standpipes, fire pump, emergency lighting, illuminated exit signs, emergency generator, prior to occupancy to ensure proper operation. These tests shall be witnessed by the Government's designated representative.

4.04 RECYCLING (ON-AIRPORT) (JUN 2012)

Where state or local law, code, or ordinance requires recycling programs (including mercury-containing lamps) for the Space to be provided pursuant to this Lease, the Lessor shall comply with such state and local law, code, or ordinance in accordance with GSA Form 3517, General Clauses, 552.270-8, *Compliance with Applicable Law*. During the lease term, the Lessor agrees, upon request, to provide the Government with additional information concerning recycling programs maintained in the Building and in the Leased Space.

4.05 RANDOLPH-SHEPPARD COMPLIANCE (SEP 2013)

During the term of the Lease, the Lessor may not establish vending facilities within the leased Space that will compete with any Randolph-Sheppard vending facilities.

4.06 INTENTIONALLY DELETED

4.07 INDOOR AIR QUALITY (OCT 2019)

A. The Lessor shall control airborne contaminants at the source and/or operate the Space in such a manner that indoor air quality action limits identified in the PBS Desk Guide for Indoor Air Quality Management (Companion to GSA Order PBS 1000.8), OSHA regulatory limits, and generally accepted consensus standards are not exceeded.

B. The Lessor shall avoid the use of products containing toxic, hazardous, carcinogenic, flammable, or corrosive ingredients as determined from the product label or manufacturer's safety data sheet. The Lessor shall use available odor-free or low odor products when applying paints, glues, lubricants, and similar wet products. When such equivalent products are not available, lessor shall use the alternate products outside normal working hours. Except in an emergency, the Lessor shall provide at least 72 hours advance notice to the Government before applying chemicals or products with noticeable odors in occupied Spaces and shall adequately ventilate those Spaces during and after application.

C. The Lessor shall serve as first responder to any occupant complaints about indoor air quality (IAQ). The Lessor shall promptly investigate such complaints and implement the necessary controls to address each complaint. Investigations shall include testing as needed, to ascertain the source and severity of the complaint.

D. The Government reserves the right to conduct independent IAQ assessments and detailed studies in Space that it occupies, as well as in space serving the Space (e.g., common use areas, mechanical rooms, HVAC systems, etc.). The Lessor shall assist the Government in its assessments and detailed studies by:

1. Making available information on Building operations and Lessor activities;
2. Providing access to Space for assessment and testing, if required; and
3. Implementing corrective measures required by the LCO. The Lessor shall take corrective action to correct any tests or measurements that do not meet GSA policy action limits in the PBS Desk Guide for Indoor Air Quality Management (Companion to GSA Order PBS 1000.8), OSHA regulatory limits and generally accepted consensus standards.

E. The Lessor shall provide to the Government safety data sheets (SDS) upon request for the following products prior to their use during the term of the Lease: adhesives, caulking, sealants, insulating materials, fireproofing or firestopping materials, paints, carpets, floor, and wall patching or leveling materials, lubricants, clear finish for wood surfaces, janitorial cleaning products, pesticides, rodenticides, and herbicides. The Government reserves the right to review such products used by the Lessor within the Space, common building areas, ventilation systems and zones serving the Space, and the area above suspended ceilings and engineering space in the same ventilation zone as the Space.

F. The Lessor shall use high efficiency (HEPA) filtration vacuums for cleaning and minimum MERV 10 rated ventilation system filtration whenever feasible.

G. The Lessor is encouraged to comply with best practices outlined in Appendix D- Indoor Air Quality in GSA Leased Facilities (Best Practices) within the PBS Desk Guide for Indoor Air Quality Management (Companion to GSA Order PBS 1000.8).

4.08 HAZARDOUS MATERIALS (ON-AIRPORT) (OCT 2018)

The leased Space shall be free of hazardous materials, hazardous substances, and hazardous wastes, as defined by and according to applicable Federal, state, and local environmental regulations including, but not limited to, the following:

A. The leased Space shall be free of all asbestos containing materials, except undamaged asbestos flooring in the Space or undamaged boiler or pipe insulation outside the Space, in which case an asbestos management program conforming to EPA guidance shall be implemented.

B. The Lessor shall provide Space to the Government that is free from ongoing water leaks or moisture infiltration. The Space and ventilation zones serving the Space shall also be free of visible mold or actionable airborne mold.

1. Actionable mold is either visible mold or airborne mold of types and concentrations in excess of that found in the local outd oor air or non-problematic control areas elsewhere in the same building, whichever is lower. The Lessor shall safely remediate all actionable mold in accordance with sub-paragraph B.2 below

2. The Lessor shall be responsible for conducting the remediation in accordance with the relevant provisions of the document entitled "Mold Remediation in Schools and Commercial Buildings" (EPA 402-K-01-001, September 2008), published by EPA, as same may be amended or revised from time to time, and any other applicable Federal, state, or local laws, regulatory standards, and guidelines.

3. The Lessor acknowledges and agrees that the Government shall have a reasonable opportunity to inspect the leased Space after conclusion of the remediation. If the results of the Government's inspection indicate that the remediation does not comply with the plan or any other applicable Federal, state, or local laws, regulatory standards, or guidelines, the Lessor, at its sole cost, expense, and ris k, shall immediately take all further actions necessary to bring the remediation into compliance.

4. If the Lessor fails to exercise due diligence, or is otherwise unable to remediate the actionable mold, the Government may implement a corrective action program and deduct its costs from the rent.

4.09 OCCUPANT EMERGENCY PLANS (OCT 2020)

The Lessor is required to cooperate, participate and comply with the development and implementation of the Government's Occupant Emergency Plan (OEP) and a supplemental Shelter-in Place (SIP) Plan. Periodically, the Government may request that the Lessor assist in reviewing and revising its OEP and SIP. The Plan, among other things, will include evacuation procedures and an annual emergency evacuation drill, emergency shutdown of air intake procedures, and emergency notification procedures for the Lessor's Building engineer or manager, Building security, local emergency personnel, and Government agency personnel.

SECTION 5 ADDITIONAL TERMS AND CONDITIONS

5.01 INTENTIONALLY DELETED

Block A
6033-2 and 6033-5 S. Sossaman Rd.

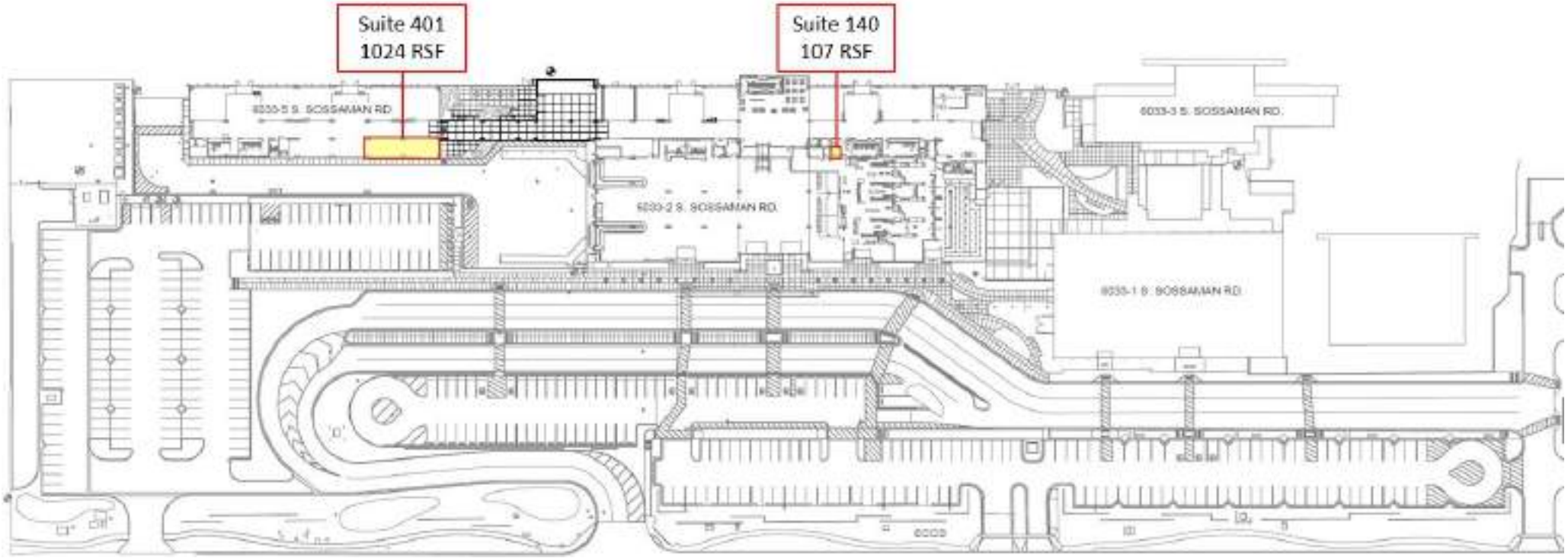

Block B

5803 S. Sossaman Rd.

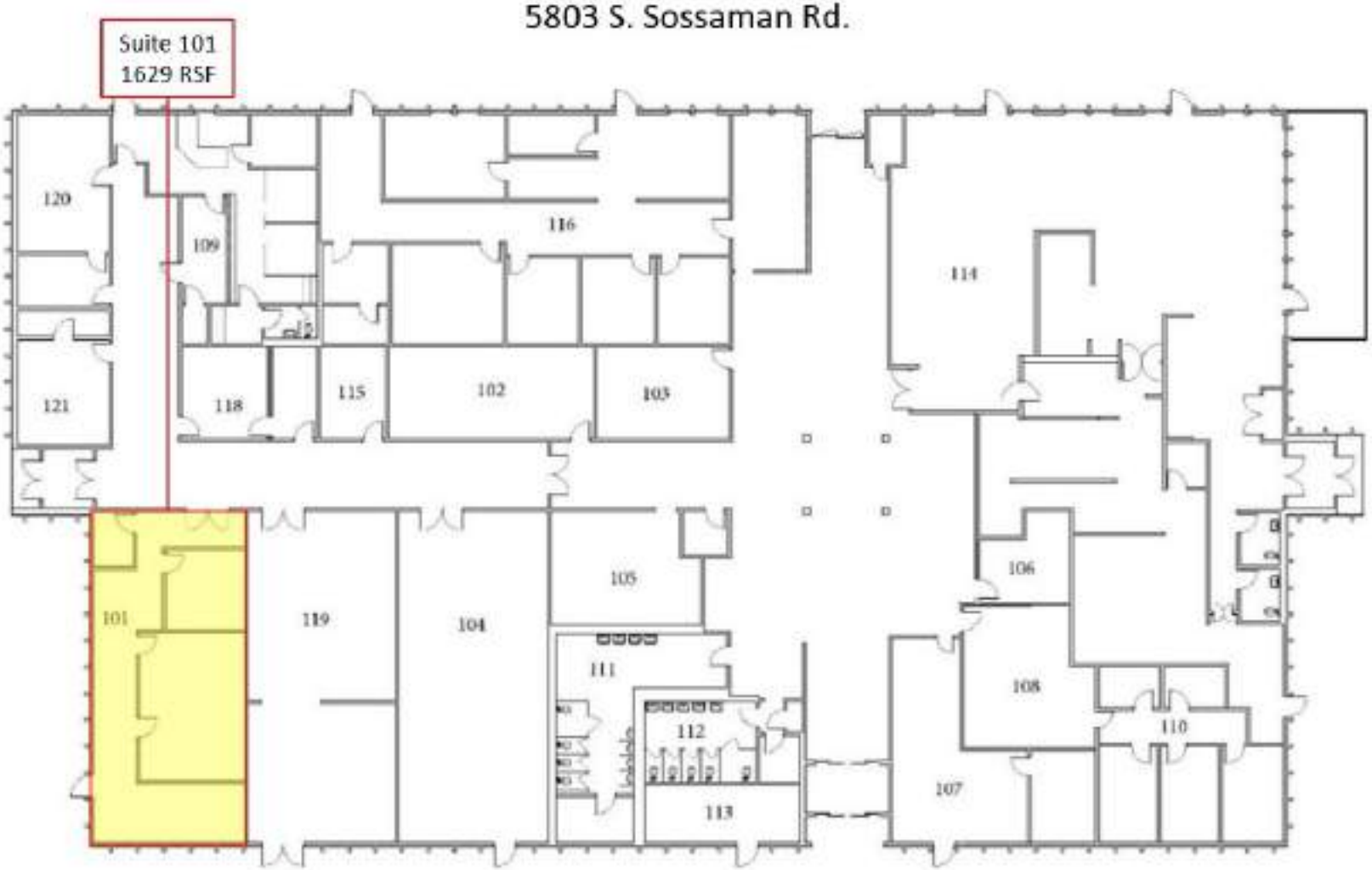

GENERAL CLAUSES
(Acquisition of Leasehold Interests in Real Property)

CATEGORY	CLAUSE NO.	48 CFR REF.	CLAUSE TITLE
GENERAL	1		SUBLETTING AND ASSIGNMENT
	2	552.270-11	SUCCESSORS BOUND
	3	552.270-23	SUBORDINATION, NON-DISTURBANCE AND ATTORNMENT
	4	552.270-24	STATEMENT OF LEASE
	5	552.270-25	SUBSTITUTION OF TENANT AGENCY
	6	552.270-26	NO WAIVER
	7		INTEGRATED AGREEMENT
	8	552.270-28	MUTUALITY OF OBLIGATION
PERFORMANCE	9		DELIVERY AND CONDITION
	10		DEFAULT BY LESSOR
	11	552.270-19	PROGRESSIVE OCCUPANCY
	12		MAINTENANCE OF THE PROPERTY, RIGHT TO INSPECT
	13		FIRE AND CASUALTY DAMAGE
	14		COMPLIANCE WITH APPLICABLE LAW
	15	552.270-12	ALTERATIONS
	16		ACCEPTANCE OF SPACE AND CERTIFICATE OF OCCUPANCY
PAYMENT	17	552.270-33	SYSTEM FOR AWARD MANAGEMENT - LEASING
	18	52.204-13	SYSTEM FOR AWARD MANAGEMENT MAINTENANCE
	19	552.270-31	PROMPT PAYMENT
	20	52.232-23	ASSIGNMENT OF CLAIMS
	21		PAYMENT
	22	52.232-33	PAYMENT BY ELECTRONIC FUNDS TRANSFER—SYSTEM FOR AWARD MANAGEMENT
STANDARDS OF CONDUCT	23	52.203-13	CONTRACTOR CODE OF BUSINESS ETHICS AND CONDUCT
	24	552.270-32	COVENANT AGAINST CONTINGENT FEES
	25	52-203-7	ANTI-KICKBACK PROCEDURES
	26	52-223-6	DRUG-FREE WORKPLACE
	27	52.203-14	DISPLAY OF HOTLINE POSTER(S)
ADJUSTMENTS	28	552.270-30	PRICE ADJUSTMENT FOR ILLEGAL OR IMPROPER ACTIVITY
	29	52.215-10	PRICE REDUCTION FOR DEFECTIVE COST OR PRICING DATA
	30	552.270-13	PROPOSALS FOR ADJUSTMENT
	31		CHANGES
AUDITS	32	552.215-70	EXAMINATION OF RECORDS BY GSA
	33	52.215-2	AUDIT AND RECORDS—NEGOTIATION

DISPUTES	34	52.233-1	DISPUTES
LABOR STANDARDS	35	52.222-26	EQUAL OPPORTUNITY
	36	52.222-21	PROHIBITION OF SEGREGATED FACILITIES
	37	52.219-28	POST-AWARD SMALL BUSINESS PROGRAM REREPRESENTATION
	38	52.222-35	EQUAL OPPORTUNITY FOR VETERANS
	39	52.222-36	EQUAL OPPORTUNITY FOR WORKERS WITH DISABILITIES
	40	52.222-37	EMPLOYMENT REPORTS ON VETERANS
SUBCONTRACTING	41	52.209-6	PROTECTING THE GOVERNMENT'S INTEREST WHEN SUBCONTRACTING WITH CONTRACTORS DEBARRED, SUSPENDED, OR PROPOSED FOR DEBARMENT
	42	52.215-12	SUBCONTRACTOR CERTIFIED COST OR PRICING DATA
	43	52.219-8	UTILIZATION OF SMALL BUSINESS CONCERNS
	44	52.219-9	SMALL BUSINESS SUBCONTRACTING PLAN
	45	52.219-16	LIQUIDATED DAMAGES—SUBCONTRACTING PLAN
	46	52.204-10	REPORTING EXECUTIVE COMPENSATION AND FIRST-TIER SUBCONTRACT AWARDS
OTHER	47	52.204-25	PROHIBITION ON CONTRACTING FOR CERTAIN TELECOMMUNICATIONS AND VIDEO SURVEILLANCE SERVICES OR EQUIPMENT
	48	52.204-19	INCORPORATION BY REFERENCE OF REPRESENTATIONS AND CERTIFICATIONS

The information collection requirements contained in this solicitation/contract that are not required by regulation have been approved by the Office of Management and Budget (OMB) pursuant to the Paperwork Reduction Act and assigned the OMB Control No. 3090-0163.

GENERAL CLAUSES
(Acquisition of Leasehold Interests in Real Property)

1. SUBLETTING AND ASSIGNMENT (JAN 2011)

The Government may sublet any part of the premises but shall not be relieved from any obligations under this lease by reason of any such subletting. The Government may at any time assign this lease and be relieved from all obligations to Lessor under this lease excepting only unpaid rent and other liabilities, if any, that have accrued to the date of said assignment. Any subletting or assignment shall be subject to prior written consent of Lessor, which shall not be unreasonably withheld.

2. 552.270-11 SUCCESSORS BOUND (SEP 1999)

This lease shall bind, and inure to the benefit of, the parties and their respective heirs, executors, administrators, successors, and assigns.

3. 552.270-23 SUBORDINATION, NON-DISTURBANCE AND ATTORNMENT (SEP 1999)

(a) Lessor warrants that it holds such title to or other interest in the premises and other property as is necessary to the Government's access to the premises and full use and enjoyment thereof in accordance with the provisions of this lease. Government agrees, in consideration of the warranties and conditions set forth in this clause, that this lease is subject and subordinate to any and all recorded mortgages, deeds of trust and other liens now or hereafter existing or imposed upon the premises, and to any renewal, modification or extension thereof. It is the intention of the parties that this provision shall be self-operative and that no further instrument shall be required to affect the present or subsequent subordination of this lease. Government agrees, however, within twenty (20) business days next following the Contracting Officer's receipt of a written demand, to execute such instruments as Lessor may reasonably request to evidence further the subordination of this lease to any existing or future mortgage, deed of trust or other security interest pertaining to the premises, and to any water, sewer or access easement necessary or desirable to serve the premises or adjoining property owned in whole or in part by Lessor if such easement does not interfere with the full enjoyment of any right granted the Government under this lease.

(b) No such subordination, to either existing or future mortgages, deeds of trust or other lien or security instrument shall operate to affect adversely any right of the Government under this lease so long as the Government is not in default under this lease. Lessor will include in any future mortgage, deed of trust or other security instrument to which this lease becomes subordinate, or in a separate non-disturbance agreement, a provision to the foregoing effect. Lessor warrants that the holders of all notes or other obligations secured by existing mortgages, deeds of trust or other security instruments have consented to the provisions of this clause and agrees to provide true copies of all such consents to the Contracting Officer promptly upon demand.

(c) In the event of any sale of the premises or any portion thereof by foreclosure of the lien of any such mortgage, deed of trust or other security instrument, or the giving of a deed in lieu of foreclosure, the Government will be deemed to have attorned to any purchaser, purchasers, transferee or transferees of the premises or any portion thereof and its or their successors and assigns, and any such purchasers and transferees will be deemed to have assumed all obligations of the Lessor under this lease, so as to establish direct privity of estate and contract between Government and such purchasers or transferees, with the same force, effect and relative priority in time and right as if the lease had initially been entered into between such purchasers or transferees and the Government; provided, further, that the Contracting Officer and such purchasers or transferees shall, with reasonable promptness following any such sale or deed delivery in lieu of foreclosure, execute all such revisions to this lease, or other writings, as shall be necessary to document the foregoing relationship.

(d) None of the foregoing provisions may be deemed or construed to imply a waiver of the Government's rights as a sovereign.

4. 552.270-24 STATEMENT OF LEASE (SEP 1999)

(a) The Contracting Officer will, within thirty (30) days next following the Contracting Officer's receipt of a joint written request from Lessor and a prospective lender or purchaser of the building, execute and deliver to Lessor a letter stating that the same is issued subject to the conditions stated in this clause and, if such is the case, that (1) the lease is in full force and effect; (2) the date to which the rent and other charges have been paid in advance, if any; and (3) whether any notice of default has been issued.

(b) Letters issued pursuant to this clause are subject to the following conditions:

(1) That they are based solely upon a reasonably diligent review of the Contracting Officer's lease file as of the date of issuance;

(2) That the Government shall not be held liable because of any defect in or condition of the premises or building;

(3) That the Contracting Officer does not warrant or represent that the premises or building comply with applicable Federal, State and local law; and

(4) That the Lessor, and each prospective lender and purchaser are deemed to have constructive notice of such facts as would be ascertainable by reasonable pre-purchase and pre-commitment inspection of the Premises and Building and by inquiry to appropriate Federal, State and local Government officials.

5. 552.270-25 SUBSTITUTION OF TENANT AGENCY (SEP 1999)

The Government may, at any time and from time to time, substitute any Government agency or agencies for the Government agency or agencies, if any, named in the lease.

6. 552.270-26 NO WAIVER (SEP 1999)

No failure by either party to insist upon the strict performance of any provision of this lease or to exercise any right or remedy consequent upon a breach thereof, and no acceptance of full or partial rent or other performance by either party during the continuance of any such breach shall constitute a waiver of any such breach of such provision.

7. INTEGRATED AGREEMENT (JUN 2012)

This Lease, upon execution, contains the entire agreement of the parties and no prior written or oral agreement, express or implied, shall be admissible to contradict the provisions of the Lease. Except as expressly attached to and made a part of the Lease, neither the Request for Lease Proposals nor any pre-award communications by either party shall be incorporated in the Lease.

8. 552.270-28 MUTUALITY OF OBLIGATION (SEP 1999)

The obligations and covenants of the Lessor, and the Government's obligation to pay rent and other Government obligations and covenants, arising under or related to this Lease, are interdependent. The Government may, upon issuance of and delivery to Lessor of a final decision asserting a claim against Lessor, set off such claim, in whole or in part, as against any payment or payments then or thereafter due the Lessor under this lease. No setoff pursuant to this clause shall constitute a breach by the Government of this lease.

9. DELIVERY AND CONDITION (JAN 2011)

(a) Unless the Government elects to have the space occupied in increments, the space must be delivered ready for occupancy as a complete unit.

(b) The Government may elect to accept the Space notwithstanding the Lessor's failure to deliver the Space substantially complete; if the Government so elects, it may reduce the rent payments.

10. DEFAULT BY LESSOR (APR 2012)

(a) The following conditions shall constitute default by the Lessor, and shall give rise to the following rights and remedies for the Government:

(1) Prior to Acceptance of the Premises. Failure by the Lessor to diligently perform all obligations required for Acceptance of the Space within the times specified, without excuse, shall constitute a default by the Lessor. Subject to provision of notice of default to the Lessor, and provision of a reasonable opportunity for the Lessor to cure its default, the Government may terminate the Lease on account of the Lessor's default.

(2) After Acceptance of the Premises. Failure by the Lessor to perform any service, to provide any item, or satisfy any requirement of this Lease, without excuse, shall constitute a default by the Lessor. Subject to provision of notice of default to the Lessor, and provision of a reasonable opportunity for the Lessor to cure its default, the Government may perform the service, provide the item, or obtain satisfaction of the requirement by its own employees or contractors. If the Government elects to take such action, the Government may deduct from rental payments its costs incurred in connection with taking the action. Alternatively, the Government may reduce the rent by an amount reasonably calculated to approximate the cost or value of the service not performed, item not provided, or requirement not satisfied, such reduction effective as of the date of the commencement of the default condition.

(3) Grounds for Termination. The Government may terminate the Lease if:

(i) The Lessor's default persists notwithstanding provision of notice and reasonable opportunity to cure by the Government, or

(ii) The Lessor fails to take such actions as are necessary to prevent the recurrence of default conditions,

and such conditions (i) or (ii) substantially impair the safe and healthful occupancy of the Premises or render the Space unusable for its intended purposes.

(4) Excuse. Failure by the Lessor to timely deliver the Space or perform any service, provide any item, or satisfy any requirement of this Lease shall not be excused if its failure in performance arises from:

(i) Circumstances within the Lessor's control;

(ii) Circumstances about which the Lessor had actual or constructive knowledge prior to the Lease Award Date that could reasonably be expected to affect the Lessor's capability to perform, regardless of the Government's knowledge of such matters;

(iii) The condition of the Property;

(iv) The acts or omissions of the Lessor, its employees, agents or contractors; or

(v) The Lessor's inability to obtain sufficient financial resources to perform its obligations.

(5) The rights and remedies specified in this clause are in addition to any and all remedies to which the Government may be entitled as a matter of law.

11. INTENTIONALLY DELETED

12. MAINTENANCE OF THE PROPERTY, RIGHT TO INSPECT (APR 2015)

The Lessor shall maintain the Property, including the building, building systems, and all equipment, fixtures, and appurtenances furnished by the Lessor under this Lease, in good repair and tenantable condition so that they are suitable in appearance and capable of supplying such heat, air conditioning, light, ventilation, safety systems, access and other things to the premises, without reasonably preventable or recurring disruption, as is required for the Government's access to, occupancy, possession, use and enjoyment of the premises as provided in this lease. For the purpose of so maintaining the premises, the Lessor may at reasonable times enter the premises with the approval of the authorized Government representative in charge. Upon request of the Lease Contracting Officer (LCO), the Lessor shall provide written documentation that building systems have been properly maintained, tested, and are operational within manufacturer's warranted operating standards. The Lessor shall maintain the Premises in a safe and healthful condition according to applicable OSHA standards and all other requirements of this Lease, including standards governing indoor air quality, existence of mold and other biological hazards, presence of hazardous materials, etc. The Government shall have the right, at any time after the Lease Award Date and during the term of the Lease, to inspect all areas of the Property to which access is necessary for the purpose of determining the Lessor's compliance with this clause.

13. FIRE AND CASUALTY DAMAGE (JUN 2016)

If the building in which the Premises are located is totally destroyed or damaged by fire or other casualty, this Lease shall immediately terminate. If the building in which the Premises are located are only partially destroyed or damaged, so as to render the Premises untenantable, or not usable for their intended purpose, the Lessor shall have the option to elect to repair and restore the Premises or terminate the Lease. The Lessor shall be permitted a reasonable amount of time, not to exceed **270 days** from the event of destruction or damage, to repair or restore the Premises, provided that the Lessor submits to the Government a reasonable schedule for repair of the Premises within **60 days** of the event of destruction or damage. If the Lessor fails to timely submit a reasonable schedule for completing the work, the Government may elect to terminate the Lease effective as of the date of the event of destruction or damage. If the Lessor elects to repair or restore the Premises, but fails to repair or restore the Premises within **270 days** from the event of destruction or damage, or fails to diligently pursue such repairs or restoration so as to render timely completion commercially impracticable, the Government may terminate the Lease effective as of the date of the destruction or damage. During the time that the Premises are unoccupied, rent shall be abated. Termination of the Lease by either party under this clause shall not give rise to liability for either party.

Nothing in this lease shall be construed as relieving Lessor from liability for damage to, or destruction of, property of the United States of America caused by the willful or negligent act or omission of Lessor.

14. COMPLIANCE WITH APPLICABLE LAW (JAN 2011)

Lessor shall comply with all Federal, state and local laws applicable to its ownership and leasing of the Property, including, without limitation, laws applicable to the construction, ownership, alteration or operation of all buildings, structures, and facilities located thereon, and obtain all necessary permits, licenses and similar items at its own expense. The Government will comply with all Federal, State and local laws applicable to and enforceable against it as a

tenant under this lease, provided that nothing in this Lease shall be construed as a waiver of the sovereign immunity of the Government. This Lease shall be governed by Federal law.

15. 552.270-12 ALTERATIONS (SEP 1999)

The Government shall have the right during the existence of this lease to make alterations, attach fixtures, and erect structures or signs in or upon the premises hereby leased, which fixtures, additions or structures so placed in, on, upon, or attached to the said premises shall be and remain the property of the Government and may be removed or otherwise disposed of by the Government. If the lease contemplates that the Government is the sole occupant of the building, for purposes of this clause, the leased premises include the land on which the building is sited and the building itself. Otherwise, the Government shall have the right to tie into or make any physical connection with any structure located on the property as is reasonably necessary for appropriate utilization of the leased space.

16. INTENTIONALLY DELETED

17. 552.270-33 SYSTEM FOR AWARD MANAGEMENT – LEASING (FEB 2020)

(a) Definitions. As used in this provision—
"Electronic Funds Transfer (EFT) indicator means a four-character suffix to the unique entity identifier. The suffix is assigned at the discretion of the commercial, nonprofit, or Government entity to establish additional System for Award Management records for identifying alternative EFT accounts (see subpart 32.11) for the same entity.
"Registered in the System for Award Management (SAM)" means that–
(1) The Offeror has entered all mandatory information, including the unique entity identifier and the EFT indicator, if applicable, the Commercial and Government Entity (CAGE) code, as well as data required by the Federal Funding Accountability and Transparency Act of 2006 (see subpart 4.14) into SAM
(2) The offeror has completed the Core, Assertions, and Representations and Certifications, and Points of Contact sections of the registration in SAM;
(3) The Government has validated all mandatory data fields, to include validation of the Taxpayer Identification Number (TIN) with the Internal Revenue Service (IRS). The offeror will be required to provide consent for TIN validation to the Government as a part of the SAM registration process; and
(4) The Government has marked the record "Active".
"Unique entity identifier" means a number or other identifier used to identify a specific commercial, nonprofit, or Government entity. See www.sam.gov for the designated entity for establishing unique entity identifiers.
(b)

(1) An Offeror is required to be registered in SAM prior to award, and shall continue to be registered during performance, and through final payment of any contract, basic agreement, basic ordering agreement, or blanket purchasing agreement resulting from this solicitation.
(2) The Offeror shall enter, in the block with its name and address on the cover page of its offer, the annotation "Unique Entity Identifier" followed by the unique entity identifier that identifies the Offeror's name and address exactly as stated in the offer. The Offeror also shall enter its EFT indicator, if applicable. The unique entity identifier will be used by the Contracting Officer to verify that the Offeror is registered in the SAM.
(c) If the Offeror does not have a unique entity identifier, it should contact the entity designated at www.sam.gov for establishment of the unique entity identifier directly to obtain one. The Offeror should be prepared to provide the following information:
(1) Company legal business name.
(2) Tradestyle, doing business, or other name by which your entity is commonly recognized.
(3) Company physical street address, city, state, and Zip Code.t
(4) Company mailing address, city, state and Zip Code (if separate from physical).
(5) Company telephone number.
(6) Date the company was started.
(7) Number of employees at your location.
(8) Chief executive officer/key manager.
(9) Line of business (industry).
(10) Company headquarters name and address (reporting relationship within your entity).
(d) If the Offeror does not become registered in the SAM database in the time prescribed by the Contracting Officer, the Contracting Officer will proceed to award to the next otherwise successful registered Offeror.
(e) Processing time should be taken into consideration when registering. Offerors who are not registered in SAM should consider applying for registration immediately upon receipt of this solicitation. See https://www.sam.gov for information on registration.

18. 52.204-13 SYSTEM FOR AWARD MANAGEMENT MAINTENANCE (OCT 2018)

This clause is incorporated by reference.

19. 552.270-31 PROMPT PAYMENT (JUN 2011)

The Government will make payments under the terms and conditions specified in this clause. Payment shall be considered as being made on the day a check is dated or an electronic funds transfer is made. All days referred to in this clause are calendar days, unless otherwise specified.

(a) *Payment due date—*

(1) *Rental payments.* Rent shall be paid monthly in arrears and will be due on the first workday of each month, and only as provided for by the lease.

(i) When the date for commencement of rent falls on the 15th day of the month or earlier, the initial monthly rental payment under this contract shall become due on the first workday of the month following the month in which the commencement of the rent is effective.

(ii) When the date for commencement of rent falls after the 15th day of the month, the initial monthly rental payment under this contract shall become due on the first workday of the second month following the month in which the commencement of the rent is effective.

(2) *Other payments.* The due date for making payments other than rent shall be the later of the following two events:

(i) The 30th day after the designated billing office has received a proper invoice from the Contractor.

(ii) The 30th day after Government acceptance of the work or service. However, if the designated billing office fails to annotate the invoice with the actual date of receipt, the invoice payment due date shall be deemed to be the 30th day after the Contractor's invoice is dated, provided a proper invoice is received and there is no disagreement over quantity, quality, or Contractor compliance with contract requirements.

(b) Invoice and inspection requirements for payments other than rent.

(1) The Contractor shall prepare and submit an invoice to the designated billing office after completion of the work. A proper invoice shall include the following items:

(i) Name and address of the Contractor.

(ii) Invoice date.

(iii) Lease number.

(iv) Government's order number or other authorization.

(v) Description, price, and quantity of work or services delivered.

(vi) Name and address of Contractor official to whom payment is to be sent (must be the same as that in the remittance address in the lease or the order).

(vii) Name (where practicable), title, phone number, and mailing address of person to be notified in the event of a defective invoice.

(2) The Government will inspect and determine the acceptability of the work performed or services delivered within seven days after the receipt of a proper invoice or notification of completion of the work or services unless a different period is specified at the time the order is placed. If actual acceptance occurs later, for the purpose of determining the payment due date and calculation of interest, acceptance will be deemed to occur on the last day of the seven day inspection period. If the work or service is rejected for failure to conform to the technical requirements of the contract, the seven days will be counted beginning with receipt of a new invoice or notification. In either case, the Contractor is not entitled to any payment or interest unless actual acceptance by the Government occurs.

(c) Interest Penalty.

(1) An interest penalty shall be paid automatically by the Government, without request from the Contractor, if payment is not made by the due date.

(2) The interest penalty shall be at the rate established by the Secretary of the Treasury under Section 12 of the Contract Disputes Act of 1978 (41 U.S.C. 611) that is in effect on the day after the due date. This rate is referred to as the ''Renegotiation Board Interest Rate,'' and it is published in the **Federal Register** semiannually on or about January 1 and July 1. The interest penalty shall accrue daily on the payment amount approved by the Government and be compounded in 30-day increments inclusive from the first day after the due date through the payment date.

(3) Interest penalties will not continue to accrue after the filing of a claim for such penalties under the clause at 52.233–1, Disputes, or for more than one year. Interest penalties of less than $1.00 need not be paid.

(4) Interest penalties are not required on payment delays due to disagreement between the Government and Contractor over the payment amount or other issues involving contract compliance or on amounts

temporarily withheld or retained in accordance with the terms of the contract. Claims involving disputes, and any interest that may be payable, will be resolved in accordance with the clause at 52.233-1, Disputes.

(a) *Overpayments.* If the Lessor becomes aware of a duplicate payment or that the Government has otherwise overpaid on a payment, the Contractor shall—

(1) Return the overpayment amount to the payment office cited in the contract along with a description of the overpayment including the—

(i) Circumstances of the overpayment (*e.g.,* duplicate payment, erroneous payment, liquidation errors, date(s) of overpayment);

(ii) Affected lease number; (iii) Affected lease line item or sub-line item, if applicable; and

(iii) Lessor point of contact.

(2) Provide a copy of the remittance and supporting documentation to the Contracting Officer.

17. 52.232-23 ASSIGNMENT OF CLAIMS (MAY 2014)

(Applicable to leases over the micro-purchase threshold.)

(a) The Contractor, under the Assignment of Claims Act, as amended, 31 U.S.C. 3727, 41 U.S.C. 6305 (hereafter referred to as "the Act"), may assign its rights to be paid amounts due or to become due as a result of the performance of this contract to a bank, trust company, or other financing institution, including any Federal lending agency. The assignee under such an assignment may thereafter further assign or reassign its right under the original assignment to any type of financing institution described in the preceding sentence.

(b) Any assignment or reassignment authorized under the Act and this clause shall cover all unpaid amounts payable under this contract, and shall not be made to more than one party, except that an assignment or reassignment may be made to one party as agent or trustee for two or more parties participating in the financing of this contract.

(c) The Contractor shall not furnish or disclose to any assignee under this contract any classified document (including this contract) or information related to work under this contract until the Contracting Officer authorizes such action in writing.

18. PAYMENT (MAY 2011)

(a) When space is offered and accepted, the amount of American National Standards Institute/Building Owners and Managers Association Office Area (ABOA) square footage delivered will be confirmed by:

(1) The Government's measurement of plans submitted by the successful Offeror as approved by the Government, and an inspection of the space to verify that the delivered space is in conformance with such plans or

(2) A mutual on-site measurement of the space, if the Contracting Officer determines that it is necessary.

(b) Payment will not be made for space which is in excess of the amount of ABOA square footage stated in the lease.

(c) If it is determined that the amount of ABOA square footage actually delivered is less than the amount agreed to in the lease, the lease will be modified to reflect the amount of ABOA space delivered and the annual rentalwill be adjusted as follows:

ABOA square feet not delivered multiplied by one plus the common area factor (CAF), multiplied by the rate per rentable square foot (RSF). That is: (1+CAF) x Rate per RSF = Reduction in Annual Rent

20. 52.232-33 PAYMENT BY ELECTRONIC FUNDS TRANSFER—SYSTEM FOR AWARD MANAGEMENT (OCT 2018)

This clause is incorporated by reference.

21. 52.203-13 CONTRACTOR CODE OF BUSINESS ETHICS AND CONDUCT (JUN 2020)

(Applicable to leases over $5.5 million total contract value and performance period is 120 days or more.)

This clause is incorporated by reference.

22. 552.270-32 COVENANT AGAINST CONTINGENT FEES (JUN 2011)

(Applicable to leases over the Simplified Lease Acquisition Threshold.)

(a) The Contractor warrants that no person or agency has been employed or retained to solicit or obtain this contract upon an agreement or understanding for a contingent fee, except a bona fide employee or agency. For breach or violation of this warranty, the Government shall have the right to annul this contract without liability or, in its discretion, to deduct from the contract price or consideration, or otherwise recover the full amount of the contingent fee.

(b) *Bona fide agency,* as used in this clause, means an established commercial or selling agency (including licensed real estate agents or brokers), maintained by a Contractor for the purpose of securing business, that neither exerts nor proposes to exert improper influence to solicit or obtain Government contracts nor holds itself out as being able to obtain any Government contract or contracts through improper influence.

(1) *Bona fide employee,* as used in this clause, means a person, employed by a Contractor and subject to the Contractor's supervision and control as to time, place, and manner of performance, who neither exerts nor proposes to exert improper influence to solicit or obtain Government contracts nor holds out as being able to obtain any Government contract or contracts through improper influence.

(2) *Contingent fee,* as used in this clause, means any commission, percentage, brokerage, or other fee that is contingent upon the success that a person or concern has in securing a Government contract.

(3) *Improper influence,* as used in this clause, means any influence that induces or tends to induce a *Government* employee or officer to give consideration or to act regarding a Government contract on any basis other than the merits of the matter.

23. 52.203-7 ANTI-KICKBACK PROCEDURES (JUN 2020)

(Applicable to leases over the Simplified Lease Acquisition Threshold.)

This clause is incorporated by reference.

24. 52.223-6 DRUG-FREE WORKPLACE (MAY 2001)

(Applicable to leases over the Simplified Lease Acquisition Threshold, as well as to leases of any value awarded to an individual.)

This clause is incorporated by reference.

25. 52.203-14 DISPLAY OF HOTLINE POSTER(S) (JUN 2020)

(Applicable to leases over $5.5 Million total contract value and performance period is 120 days or more.)

(a) Definition.

United States, as used in this clause, means the 50 States, the District of Columbia, and outlying areas.

(b) *Display of fraud hotline poster(s).* Except as provided in paragraph (c)—

(1) During contract performance in the United States, the Contractor shall prominently display in common work areas within business segments performing work under this contract and at contract work sites-

(i) Any agency fraud hotline poster or Department of Homeland Security (DHS) fraud hotline poster identified in paragraph (b)(3) of this clause; and

(ii) Any DHS fraud hotline poster subsequently identified by the Contracting Officer.

(2) Additionally, if the Contractor maintains a company website as a method of providing information to employees, the Contractor shall display an electronic version of the poster(s) at the website.

(3) Any required posters may be obtained as follows:

Poster(s)	***Obtain from***

(*Contracting Officer shall insert—*

(i) Appropriate agency name(s) and/or title of applicable Department of Homeland Security fraud hotline poster); and

(ii) The website(s) or other contact information for obtaining the poster(s).)

(c) If the Contractor has implemented a business ethics and conduct awareness program, including a reporting mechanism, such as a hotline poster, then the Contractor need not display any agency fraud hotline posters as required in paragraph (b) of this clause, other than any required DHS posters.

(d) *Subcontracts.* The Contractor shall include the substance of this clause, including this paragraph (d), in all subcontracts that exceed the threshold specified in Federal Acquisition Regulation 3.1004(b)(1) on the date of subcontract award, except when the subcontract—

(1) Is for the acquisition of a commercial item; or

(2) Is performed entirely outside the United States.

26. 552.270-30 PRICE ADJUSTMENT FOR ILLEGAL OR IMPROPER ACTIVITY (JUN 2011)

(Applicable to leases over the Simplified Lease Acquisition Threshold.)

(a) If the head of the contracting activity (HCA) or his or her designee determines that there was a violation of subsection 27(a) of the Office of Federal Procurement Policy Act, as amended (41 U.S.C. 423), as implemented in the Federal Acquisition Regulation, the Government, at its election, may—

(1) Reduce the monthly rental under this lease by five percent of the amount of the rental for each month of the remaining term of the lease, including any option periods, and recover five percent of the rental already paid;

(2) Reduce payments for alterations not included in monthly rental payments by five percent of the amount of the alterations agreement; or

(3) Reduce the payments for violations by a Lessor's subcontractor by an amount not to exceed the amount of profit or fee reflected in the subcontract at the time the subcontract was placed.

(b) Prior to making a determination as set forth above, the HCA or designee shall provide to the Lessor a written notice of the action being considered and the basis thereof. The Lessor shall have a period determined by the agency head or designee, but not less than 30 calendar days after receipt of such notice, to submit in person, in writing, or through a representative, information and argument in opposition to the proposed reduction. The agency head or designee may, upon good cause shown, determine to deduct less than the above amounts from payments.

(c) The rights and remedies of the Government specified herein are not exclusive and are in addition to any other rights and remedies provided by law or under this lease.

***27.* 52.215-10 PRICE REDUCTION FOR DEFECTIVE COST OR PRICING DATA (AUG 2011)**
(Applicable when cost or pricing data are required for work or services over $750,000.)
This clause is incorporated by reference.

28. 552.270-13 PROPOSALS FOR ADJUSTMENT (OCT 2016)
This clause is incorporated by reference.

29. CHANGES (MAR 2013)

(a) The LCO may at any time, by written order, direct changes to the Tenant Improvements within the Space, Building Security Requirements, or the services required under the Lease.

(b) If any such change causes an increase or decrease in Lessor's costs or time required for performance of its obligations under this Lease, whether or not changed by the order, the Lessor shall be entitled to an amendment to the Lease providing for one or more of the following:

(1) An adjustment of the delivery date;

(2) An equitable adjustment in the rental rate;

(3) A lump sum equitable adjustment; or

(4) A change to the operating cost base, if applicable.

(c) The Lessor shall assert its right to an amendment under this clause within 30 days from the date of receipt of the change order and shall submit a proposal for adjustment. Failure to agree to any adjustment shall be a dispute under the Disputes clause. However, the pendency of an adjustment or existence of a dispute shall not excuse the Lessor from proceeding with the change as directed.

(d) Absent a written change order from the LCO, or from a Government official to whom the LCO has explicitly and in writing delegated the authority to direct changes, the Government shall not be liable to Lessor under this clause.

30. 552.215-70 EXAMINATION OF RECORDS BY GSA (JUL 2016)
This clause is incorporated by reference.

31. 52.215-2 AUDIT AND RECORDS—NEGOTIATION (JUN 2020)
(Applicable to leases over the Simplified Lease Acquisition Threshold.)
This clause is incorporated by reference.

34. 52.233-1 DISPUTES (MAY 2014)
This clause is incorporated by reference.

35. 52.222-26 EQUAL OPPORTUNITY (SEP 2016)
This clause is incorporated by reference.

36. 52.222-21 PROHIBITION OF SEGREGATED FACILITIES (APR 2015)
This clause is incorporated by reference.

37. 52.219-28 POST-AWARD SMALL BUSINESS PROGRAM REREPRESENTATION (MAY 2020)
(Applicable to leases exceeding the micro-purchase threshold.)
This clause is incorporated by reference.

38. 52.222-35 EQUAL OPPORTUNITY FOR VETERANS (JUN 2020)
(Applicable to leases $150,000 or more, total contract value.)

(a) *Definitions*. As used in this clause-
"Active duty wartime or campaign badge veteran," "Armed Forces service medal veteran," "disabled veteran," "protected veteran," "qualified disabled veteran," and "recently separated veteran" have the meanings given at Federal Acquisition Regulation (FAR) 22.1301.

(b) Equal opportunity clause. The Contractor shall abide by the requirements of the equal opportunity clause at 41 CFR 60-300.5(a), as of March 24, 2014. This clause prohibits discrimination against qualified protected veterans, and requires affirmative action by the Contractor to employ and advance in employment qualified protected veterans.

(c) Subcontracts. The Contractor shall insert the terms of this clause in subcontracts valued at or above the threshold specified in FAR 22.1303(a) on the date of subcontract award, unless exempted by rules, regulations, or orders of the Secretary of Labor. The Contractor shall act as specified by the Director, Office of Federal Contract Compliance Programs, to enforce the terms, including action for noncompliance. Such necessary changes in language may be made as shall be appropriate to identify properly the parties and their undertakings.

39. 52.222-36 EQUAL OPPORTUNITY FOR WORKERS WITH DISABILITIES (JUN 2020)
(Applicable to leases over $15,000 total contract value.)

(a) Equal opportunity clause. The Contractor shall abide by the requirements of the equal opportunity clause at 41 CFR 60-741.5(a), as of March 24, 2014. This clause prohibits discrimination against qualified individuals on the basis of disability, and requires affirmative action by the Contractor to employ and advance in employment qualified individuals with disabilities.

(b) Subcontracts. The Contractor shall include the terms of this clause in every subcontract or purchase order in excess of the threshold specified in Federal Acquisition Regulation (FAR) 22.1408(a) on the date of subcontract award, unless exempted by rules, regulations, or orders of the Secretary, so that such provisions will be binding upon each subcontractor or vendor. The Contractor shall act as specified by the Director, Office of Federal Contract Compliance Programs of the U.S. Department of Labor, to enforce the terms, including action for noncompliance. Such necessary changes in language may be made as shall be appropriate to identify properly the parties and their undertakings.

40. 52.222-37 EMPLOYMENT REPORTS ON VETERANS (JUN 2020)
(Applicable to leases $150,000 or more, total contract value.)
This clause is incorporated by reference.

41. 52.209-6 PROTECTING THE GOVERNMENT'S INTEREST WHEN SUBCONTRACTING WITH CONTRACTORS DEBARRED, SUSPENDED, OR PROPOSED FOR DEBARMENT (JUN 2020)

(Applicable to leases over $35,000 total contract value.)

This clause is incorporated by reference.

42. 52.215-12 SUBCONTRACTOR CERTIFIED COST OR PRICING DATA (JUN 2020)

(Applicable if over $750,000 total contract value.)

This clause is incorporated by reference.

***43.* 52.219-8 UTILIZATION OF SMALL BUSINESS CONCERNS (OCT 2018)**

(Applicable to leases over the Simplified Lease Acquisition Threshold.)

This clause is incorporated by reference.

44. 52.219-9 SMALL BUSINESS SUBCONTRACTING PLAN (JUN 2020) ALTERNATE III (JUN 2020)

(Applicable to leases over $700,000 total contract value.)

This clause is incorporated by reference.

45. 52.219-16 LIQUIDATED DAMAGES—SUBCONTRACTING PLAN (JAN 1999)

(Applicable to leases over $700,000 total contract value.)

This clause is incorporated by reference.

46. 52.204-10 REPORTING EXECUTIVE COMPENSATION AND FIRST-TIER SUBCONTRACT AWARDS (JUN 2020)

(Applicable if over $30,000 total contract value.)

This clause is incorporated by reference.

47. 52.204-25 PROHIBITION ON CONTRACTING FOR CERTAIN TELECOMMUNICATIONS AND VIDEO SURVEILLANCE SERVICES OR EQUIPMENT (AUG 2020)

(a) *Definitions.* As used in this clause—

Backhaul means intermediate links between the core network, or backbone network, and the small subnetworks at the edge of the network (*e.g.*, connecting cell phones/towers to the core telephone network). Backhaul can be wireless (e.g., microwave) or wired (*e.g.*, fiber optic, coaxial cable, Ethernet).

Covered foreign country means The People's Republic of China.

Covered telecommunications equipment or services means–

(1) Telecommunications equipment produced by Huawei Technologies Company or ZTE Corporation (or any subsidiary or affiliate of such entities);

(2) For the purpose of public safety, security of Government facilities, physical security surveillance of critical infrastructure, and other national security purposes, video surveillance and telecommunications equipment produced by Hytera Communications Corporation, Hangzhou Hikvision Digital Technology Company, or Dahua Technology Company (or any subsidiary or affiliate of such entities);

(3) Telecommunications or video surveillance services provided by such entities or using such equipment; or

(4) Telecommunications or video surveillance equipment or services produced or provided by an entity that the Secretary of Defense, in consultation with the Director of National Intelligence or the Director of the Federal Bureau of Investigation, reasonably believes to be an entity owned or controlled by, or otherwise connected to, the government of a covered foreign country.

Critical technology means–

(1) Defense articles or defense services included on the United States Munitions List set forth in the International Traffic in Arms Regulations under subchapter M of chapter I of title 22, Code of Federal Regulations;

(2) Items included on the Commerce Control List set forth in Supplement No. 1 to part 774 of the Export Administration Regulations under subchapter C of chapter VII of title 15, Code of Federal Regulations, and controlled-

(i) Pursuant to multilateral regimes, including for reasons relating to national security, chemical and biological weapons proliferation, nuclear nonproliferation, or missile technology; or

(ii) For reasons relating to regional stability or surreptitious listening;

(3) Specially designed and prepared nuclear equipment, parts and components, materials, software, and technology covered by part 810 of title 10, Code of Federal Regulations (relating to assistance to foreign atomic energy activities);

(4) Nuclear facilities, equipment, and material covered by part 110 of title 10, Code of Federal Regulations (relating to export and import of nuclear equipment and material);

(5) Select agents and toxins covered by part 331 of title 7, Code of Federal Regulations, part 121 of title 9 of such Code, or part 73 of title 42 of such Code; or

(6) Emerging and foundational technologies controlled pursuant to section 1758 of the Export Control Reform Act of 2018 (50 U.S.C. 4817).

Interconnection arrangements means arrangements governing the physical connection of two or more networks to allow the use of another's network to hand off traffic where it is ultimately delivered (*e.g.*, connection of a customer of telephone provider A to a customer of telephone company B) or sharing data and other information resources.

Reasonable inquiry means an inquiry designed to uncover any information in the entity's possession about the identity of the producer or provider of covered telecommunications equipment or services used by the entity that excludes the need to include an internal or third-party audit.

Roaming means cellular communications services (*e.g.*, voice, video, data) received from a visited network when unable to connect to the facilities of the home network either because signal coverage is too weak or because traffic is too high.

Substantial or essential component means any component necessary for the proper function or performance of apiece of equipment, system, or service.

(b) *Prohibition*. (1) Section 889(a)(1)(A) of the John S. McCain National Defense Authorization Act for Fiscal Year 2019 (Pub. L. 115-232) prohibits the head of an executive agency on or after August 13, 2019, from procuring or obtaining, or extending or renewing a contract to procure or obtain, any equipment, system, or service that uses covered telecommunications equipment or services as a substantial or essential component of any system, or as critical technology as part of any system. The Contractor is prohibited from providing to the Government any equipment, system, or service that uses covered telecommunications equipment or services as a substantial or essential component of any system, or as critical technology as part of any system, unless an exception at paragraph (c) of this clause applies or the covered telecommunication equipment or services are covered by a waiver described in FAR 4.2104.

(2) Section 889(a)(1)(B) of the John S. McCain National Defense Authorization Act for Fiscal Year 2019 (Pub. L. 115-232) prohibits the head of an executive agency on or after August 13, 2020, from entering into a contract, or extending or renewing a contract, with an entity that uses any equipment, system, or service that uses covered telecommunications equipment or services as a substantial or essential component of any system, or as critical technology as part of any system, unless an exception at paragraph (c) of this clause applies or the covered telecommunication equipment or services are covered by a waiver described in FAR 4.2104. This prohibition applies to the use of covered telecommunications equipment or services, regardless of whether that use is in performance of work under a Federal contract.

(c) *Exceptions.* This clause does not prohibit contractors from providing—

(1) A service that connects to the facilities of a third-party, such as backhaul, roaming, or interconnection arrangements; or

(2) Telecommunications equipment that cannot route or redirect user data traffic or permit visibility into any user data or packets that such equipment transmits or otherwise handles.

(d) Reporting requirement. (1) In the event the Contractor identifies covered telecommunications equipment or services used as a substantial or essential component of any system, or as critical technology as part of any system, during contract performance, or the Contractor is notified of such by a subcontractor at any tier or by any other source, the Contractor shall report the information in paragraph (d)(2) of this clause to the Contracting Officer, unless elsewhere in this contract are established procedures for reporting the information; in the case of the Department of Defense, the Contractor shall report to the website at https://dibnet.dod.mil. For indefinite delivery contracts, the Contractor shall report to the Contracting Officer for the indefinite delivery contract and the Contracting Officer(s) for any affected order or, in the case of the Department of Defense, identify both the indefinite delivery contract and any affected orders in the report provided at https://dibnet.dod.mil.

(2) The Contractor shall report the following information pursuant to paragraph (d)(1) of this clause

(i) Within one business day from the date of such identification or notification: the contract number; the order number(s), if applicable; supplier name; supplier unique entity identifier (if known); supplier Commercial and Government Entity (CAGE) code (if known); brand; model number (original equipment manufacturer number,

manufacturer part number, or wholesaler number); item description; and any readily available information about mitigation actions undertaken or recommended.

(i) Within 10 business days of submitting the information in paragraph (d)(2)(i) of this clause: any further available information about mitigation actions undertaken or recommended. In addition, the Contractor shall describe the efforts it undertook to prevent use or submission of covered telecommunications equipment or services, and any additional efforts that will be incorporated to prevent future use or submission of covered telecommunications equipment or services.

(e) *Subcontracts.* The Contractor shall insert the substance of this clause, including this paragraph (e) and excluding paragraph (b)(2), in all subcontracts and other contractual instruments, including subcontracts for the acquisition of commercial items.

48. 52.204-19 INCORPORATION BY REFERENCE OF REPRESENTATIONS AND CERTIFICATIONS (DEC 2014).

This clause is incorporated by reference.

Phoenix-Mesa Gateway Airport Authority
5835 S Sossaman Road
Mesa, Arizona 85212-6014
www.gatewayairport.com

Board Action Item

Re: Resolution 21-40

To:	**Board of Directors**
From:	**R. J. Draper, P.E., LEED AP, CM Engineering & Facilities Director**
Through:	**Scott Brownlee, Deputy Director/COO** **J. Brian O'Neill, A.A.E., Executive Director/CEO**
Subject:	**Terminal Modernization Pre-Construction Services (CMAR) – McCarthy Building Companies, Inc.**
Date:	**September 21, 2021**

Proposed Motion

To authorize a contract with McCarthy Building Companies, Inc. (McCarthy) for Terminal Modernization Construction Manager at Risk (CMAR) Pre-Construction Services, in an amount not to exceed $249,610 under CIP 1201.

Narrative

The Terminal Modernization project has become necessary due to the age and condition of the current temporary modular facility (Annex), the facility's inefficient mechanical systems, and increasing passenger activity and additional airlines serving Phoenix-Mesa Gateway Airport (Airport, Gateway Airport). Efficiency of the current facility is severely limited due to its size and airline gate configuration. The intent of this project is to modernize the facility, increase capacity, and improve the customer experience, health, and safety of our passengers. This project represents the last expansion opportunity for Gateway Airport's current commercial passenger terminal. Future increases in passenger demand will be addressed through a new commercial passenger terminal on the east side of the Airport.

The Contractor will provide pre-construction management services as a CMAR for the replacement of the current Terminal Annex modular building with a new connected five-gate terminal addition while maintaining the existing passenger service to three (3) aircraft parking spots.

The Notice of Request for Qualifications (RFQ), Solicitation 2022-002-RFQ was issued on June 7, 2021 and advertised in the Arizona Business Gazette on 6/10, 6/17, 6/24 and 7/01/21; it was also posted on the AzAA, ACC, ACI-NA, FAA Matchmaker and SWAAAE Websites as well as the Phoenix-Mesa Gateway Airport Authority Website. In addition, the RFQ was emailed to a list of 93 prospective firms and included DBE and Small Business outreach. PMGAA Staff received nine (9) Statements of Qualifications on July 12, 2021. After reviewing the SOQs and conducting presentation/interviews with the three (3) top ranked firms, the Evaluation Panel unanimously ranked McCarthy as the firm that best satisfied the requirements based on the qualifications of the firm, project team experience, project understanding, approach to performing the required services, and commitment to utilizing DBEs, and had the best overall experience and qualifications for this project.

Fiscal Impact

These Pre-construction Services are included in the FY22 Capital Budget and we anticipate receiving FAA Grant Funding and/or PFC Funding for this project, under CIP 1201.

Attachment: CMAR Pre-Construction Services Contract

RESOLUTION NO. 21-40

WHEREAS, the Phoenix-Mesa Gateway Airport Authority ("Authority"), a joint powers airport authority formed pursuant to Arizona Revised Statute §28-8521 *et seq.* owns and operates the Phoenix-Mesa Gateway Airport ("Airport"); and

WHEREAS the Authority desires to authorize a contract with McCarthy Building Companies, Inc. (McCarthy) for Terminal Modernization Construction Manager at Risk (CMAR) Pre-Construction Services, in an amount not to exceed $249,610 under CIP 1201.

NOW, THEREFORE, BE IT RESOLVED by the Board of Directors of the Authority as follows:

> **The Board of Directors of the Authority hereby authorize a contract with McCarthy Building Companies, Inc. (McCarthy) for Terminal Modernization Construction Manager at Risk (CMAR) Pre-Construction Services, in an amount not to exceed $249,610 under CIP 1201. This resolution also authorizes the Chair or Executive Director/CEO to make such additions, deletions, and changes as may be approved by the Chair or Executive Director/CEO, necessary to carry out the purposes and intent of this Resolution.**

Passed and adopted by the Authority this 21st day of September, 2021.

_____
John Giles, Chair

ATTEST:

_____
Misty Johnson, Clerk of the Board

APPROVED AS TO FORM:

_____
Jill Casson Owen, Attorney

DIVISION I

TERMINAL MODERNIZATION

CONSTRUCTION MANAGER AT RISK (CMAR) PRE-CONSTRUCTION SERVICES CONTRACT

PROJECT NO. 1201

TABLE OF CONTENTS

ARTICLE	PAGE
1 – PARTICIPANTS AND PROJECT	3
2 – CONTRACT DOCUMENTS	4
3 – PRE-CONSTRUCTION SERVICES	5
4 – CONSTRUCTION SERVICES	15
5 – PMGAA FURNISHED INFORMATION	16
6 – CONTRACT TIME	16
7 – CONTRACT PRICE	16
8 – PAYMENTS	16
9 – CHANGES	17
10 – SUSPENSION AND TERMINATION	17
11 – INSURANCE	19
12 – INDEMNIFICATION	21
13 – DISPUTE RESOLUTION	21
14 – ALLOWANCES	22

EXHIBIT	PAGE
A – PRE-CONSTRUCTION SERVICES SCOPE OF WORK AND SCHEDULE	24
B – SUBMITTAL REQUIREMENTS FOR GMP PROPOSAL	35
C - PMGAA's PUBLISHED RULES AND REGULATIONS AND MINIMUM STANDARDS	37

Phoenix-Mesa Gateway Airport
Engineering & Facilities Department

Construction Manager at Risk (CMAR)
Pre-Construction Services
Project No. 1201

THIS CONTRACT is made and entered into on the 21st day of September, 2021, by and between the Phoenix-Mesa Gateway Airport Authority, a joint powers airport authority, authorized by the state of Arizona, hereinafter called ("PMGAA") and the "Construction Manager at Risk" or "CMAR" designated below. Individually, each is a "Party" and collectively, the "Parties".

PMGAA and CMAR agree as follows:

ARTICLE 1 – PARTICIPANTS AND PROJECT

PMGAA:
Phoenix-Mesa Gateway Airport Authority
Project Manager: Bob Draper, PE
Telephone: 480-988-7705
Fax: 480-988-2315
E-mail: bdraper@gatewayairport.com

CMAR:
McCarthy Building Companies, Inc.
6225 N. 24th Street, Suite 200
Phoenix, AZ 85016
Brandon Moon
Telephone: 480-261-6222
Email: bmoon@mccarthy.com

DESIGN PROFESSIONAL:
DWL Architects + Planners, Inc.
2333 North Central Avenue
Phoenix, AZ 85004
Shawn Filip
602-264-9731
Email: filip@dwlarchitects.com

PROJECT DESCRIPTION: **Terminal Modernization**

PROJECT LOCATION:
Phoenix Mesa Gateway Airport
Mesa, Az 85212

ARTICLE 2 – CONTRACT DOCUMENTS

2.1 CONTRACT DOCUMENTS

The Contract between PMGAA and CMAR shall consist of the following Contract Documents:

1. This Contract and all of its Exhibits herein;
2. The Statement of Qualifications (SOQ) requirements (2022-002-RFQ), documents and attachments, and CMAR's submittal dated July 12, 2021.

2.1 DEFINITIONS

Whenever the following terms are used in this Contract, the intent and meaning shall be interpreted as follows:

Allowance – A specific amount for a specific item of Work, if any, that PMGAA agrees has not been sufficiently designed, detailed, or selected (including design changes from 90% to 100% as authorized by and at the discretion of PMGAA) at the time the Contract Price is agreed to for CMAR to provide a definitive price. Allowances shall be treated in accordance with Article 9 of this Contract.

Baseline Cost Model –A breakdown and estimate of the scope of the Project developed by CMAR pursuant to Article 3.4.1 of this contract.

CMAR or Construction Manager at Risk – The person or firm selected by PMGAA to provide pre-construction and/or construction services as detailed in a Construction Manager at Risk Contract with PMGAA. In these General Conditions, the term "CMAR" includes CMAR under both Pre-Construction and Construction Services Contracts.

CMAR Fee or CMAR's Fee – An agreed to percentage in an accepted GMP that represents the CMAR's fee for performance of the Work.

Contract Documents – Where compensation under the Contract is based upon a GMP accepted by PMGAA, the term "Contract Documents" also includes the accepted GMP Proposal.

Contract Price – Where compensation under the Contract based upon a GMP accepted by PMGAA, the term "Contract Price" refers to the GMP.

Cost-Based Contract, Change Order, or Job Order – A Contract, Change Order, or Job Order where the Contract Price is based upon the actual cost of performing the Work, subject to the terms of the Contract Documents, these would include those generally referred to as "Cost of the Work plus a Fee with a GMP," "Time and Materials," or "Cost Plus a Fee."

Cost of the Work – The direct costs necessarily incurred by CMAR in the proper, timely, and complete performance on the Work. The Cost of the Work shall include only those costs set forth in Exhibit A of this Contract.

Deliverables – The work products prepared by CMAR in performing the scope of work described in the Contract. Some of the major deliverables to be prepared and provided by CMAR during pre-construction may include but are limited to: the Baseline Cost Model and Schedule that validate PMGAA's plan and budget, Construction Management Plan, Detailed Project Schedule, Schedule of Values, alternative system evaluations, procurement strategies and plans, Detailed Cost Estimates, construction market surveys, cash flow projections, GMP Proposals, Subcontractor procurement plan, Subcontractor agreements, Subcontractor bid packages, Supplier agreements, Constructability

Review, Cost Control Log, Traffic control and phasing plans and others as indicated in this Contract or required by the Project Team.

Pre-Construction Services Contract – The Contract entered into between PMGAA and the CMAR for Pre-Construction Services to be provided by the CMAR, including, without limitation, the generation of a GMP Proposal. If the GMP Proposal is accepted by PMGAA and a Construction Contract is entered into between PMGAA and CMAR, the duties, obligations and warranties of the CMAR under the Pre-Construction Services Contract survive and are incorporated into the resulting Construction Contract.

Pre-Construction Services – The services to be provided under the Pre-Construction Services Contract.

Detailed Project Schedule – The Detailed Project Schedule developed by the CMAR for the review and approval of the Project Manager in accordance with Article 3.2 of this contract, if applicable.

GMP Plans and Specifications – The plan and specifications upon which the Guaranteed Maximum Price Proposal is based.

GMP Proposal – The proposal of CMAR submitted pursuant to Article 3.6 of this contract for the entire Work and/or portion (phases) of the Work.

Guaranteed Maximum Price or GMP – The Guaranteed Maximum Price set forth in the Contract, Change Order, or Job Order if applicable.

ARTICLE 3 – PRE-CONSTRUCTION SERVICES

3.1 GENERAL REQUIREMENTS

3.1.1 CMAR shall perform the Services under this Contract using only those firms, team members and individuals designated by CMAR consistent with the Statement of Qualifications dated July 12, 2021 or as otherwise approved by PMGAA. No other entities or individuals may be used without the prior written approval of PMGAA.

3.1.2 CMAR will comply with all terms and conditions of the General Conditions.

3.1.3 In the event of a conflict between this Contract and the General Conditions or any exhibit hereto or appendix thereto, the terms of this Contract shall control.

3.1.4 CMAR shall prepare and present to PMGAA a Detailed Project Schedule that is acceptable to PMGAA and in accordance with Article 3.2 of this Contract.

3.1.5 CMAR shall conduct the evaluations, perform the design document reviews, make the recommendations and provide the other Services referenced and in accordance with Article 3.3 of this Contract.

3.1.6 CMAR shall prepare and submit the Baseline Cost Model, Detailed Cost Estimates and Schedule of Values in accordance with Article 3.4 of this Contract.

3.1.7 The submitted Baseline Cost Model, Detailed Cost Estimates and Schedule of Values shall not exceed PMGAA's Construction Budget, which is $20,000,000 unless otherwise approved or

revised by PMGAA. If CMAR submits a Baseline Cost Model, Detailed Cost Estimates, and Schedule of Values that exceeds the Construction Budget or other PMGAA approved amount, unsuccessful negotiations could lead to termination or suspension of the Contract.

3.1.8 CMAR shall perform the Services required by, and in accordance with the Contract Documents and as outlined in Exhibit A of the Contract to the satisfaction of the Project Manager, exercising the degree of care, skill, diligence and judgment a professional construction manager experienced in the performance of such services for construction and/or facilities of similar scope, function, size, quality, complexity and detail to the Project in urban areas throughout the United States, would exercise at such time, under similar conditions. CMAR shall, at all times, perform the required services consistent with sound and generally accepted engineering principles and construction management and construction contracting practices

3.1.9 As a participating member of the Project Team, CMAR shall provide to PMGAA and Design Professional a written evaluation of PMGAA's Project Program and budget, each in terms of the other, with recommendations as to the appropriateness of each. CMAR shall prepare a Baseline Cost Model that validates PMGAA's budget. The Baseline Cost Model shall include all assumptions and basis of estimates in enough detail so that the Project Team can compare future detail estimates to the Baseline Cost model for variances. PMGAA and Design Professional will provide all the reasonably required data that is available in order to reach agreement between the team members that the Baseline Cost Model is an accurate projection of the costs of the Project.

3.1.10 CMAR shall attend Project Team meetings, which may include, but are not limited to, bi-weekly Project management meetings, Project workshops, special Project meetings, construction document rolling reviews, public meetings and partnering sessions. CMAR attendance at design or other meetings in which CMAR is provided the opportunity but does not actively participate and/or is not properly prepared is not acceptable. Repeated instances of non-participation and/or lack of preparedness shall be grounds for termination of CMAR Contract for default.

3.1.11 CMAR when requested by PMGAA, shall attend, make presentations and participate as may be appropriate in public agency and or community meetings, relevant to the Project. CMAR shall provide drawings, schedule diagrams, budget charges and other materials describing the Project when their use is required or appropriate in any such public agency meetings.

3.1.12 PMGAA ownership of Work Product. All Work Product prepared or otherwise created in connection with the performance of this Contract, including the Work, are to be and remain the property of PMGAA. For purposes of this provision, "Work Product" shall include all designs, drawings, plans, specifications, ideas, renderings and other information or material, in whatever form created (e.g., electronic or printed) and in all media now known or hereinafter created. All Work Product shall be considered Work Made for Hire as defined in the United States Copyright Act 17 U.S.C. §101 (Copyright Act). If for any reason any such Work is found not to be a work for hire, CMAR hereby transfers and assigns ownership of the copyright in such Work to PMGAA. The rights in this Section are exclusive to PMGAA in perpetuity.

3.1.13 CMAR represents to PMGAA in completing Pre-Construction Services and providing the reports and analysis required thereunder, that Work can be properly and timely constructed within the GMP Proposal, if accepted. CMAR does not assume any design responsibilities unless specifically called for in the scope of work, but CMAR shall be responsible for their errors, omissions or inconsistencies included in the Work.

3.1.14 CMAR and PMGAA agree and understand that PMGAA is at all times subordinate to its federal obligations, pursuant to Federal Aviation Administration ("FAA") Policies (2009) (including, but not limited to § 1.1, § 1.5, § 12.3, §10, § 14.1, *et. seq*.)

3.2 DETAILED PROJECT SCHEDULE

3.2.1 The fundamental purpose of the Detailed Project Schedule is to identify, coordinate and record the tasks and activities to be performed by all of the Project Team members and then for the Project Team to utilize that Deliverable as a basis for managing and monitoring all member's compliance with the schedule requirements of the Project. Each Project Team member is responsible for its compliance with the Detailed Project Schedule requirements. CMAR shall, however, develop and maintain the Detailed Project Schedule on behalf of and to be used by the Project Team based on input from the other Project Team members. The Baseline Project Schedule shall be developed as part of the Baseline Cost Model. The Detailed Project Schedule shall use the Critical Path method ("CPM") technique, unless required otherwise, in writing by PMGAA. CMAR shall uses scheduling software acceptable to PMGAA to develop the Detailed Project Schedule. The Detailed Project Schedule shall be presented in graphical and tabular reports as agreed upon by the Project Team. If Project phasing as described below is required, the Detailed Project Schedule shall indicate milestone dates for the phases once determined. As part of construction phase, PMGAA may require CMAR to prepare a "resource loaded" schedule for all work, including work performed by Subcontractors, detailing each of the project tasks and the required/anticipated number of personnel per day for each task. CMAR shall also indicate on the schedule its ability to meet said required/anticipated personnel requirements.

3.2.2 CMAR shall include and integrate in the Detailed Project Schedule the services and activities required of PMGAA, Design Professional and CMAR including all construction phase activities based on the input received from PMGAA and the Design Professional. The Detailed Project Schedule shall define activities as determined by PMGAA to the extent required to show: (a) the coordination between preliminary design and various pre-construction documents, (b) any separate long-lead procurements, (c) any permitting issues, (d) any land, right-of-way, or easement acquisition, (e) bid packaging strategy and awards to Subcontractors and Suppliers, (f) major stages of construction, (g) start-up and commissioning, and (h) occupancy of the completed Work by PMGAA. The Detailed Project Schedule shall include by example and not limitation, proposed activity sequences and durations for design, procurement, construction and testing activities, milestone dates for actions and decisions by the Project Team, preparation and processing of shop drawings and samples, delivery of materials or equipment requiring long-lead time procurement (if any), milestone dates for various construction phases, Total Float for all activities to the extent authorized by PMGAA, relationships between the activities, PMGAA's occupancy requirements showing portions of the Project having occupancy priority, and proposed dates for Final Completion.

3.2.3 A Baseline Project Schedule shall be initiated with the project Baseline Cost Model and agreed to by the project team at the same time. CMAR shall update and maintain a detailed Project Schedule throughout pre-construction such that it shall not require major changes at the start of the construction phase to incorporate CMAR's plan for the performance of the construction phase Work. CMAR shall provide updates and/or revisions to the Detailed Project Schedule for use by the Project Team, whenever required, but no less often than at the Project Team meetings. CMAR shall include with such submittals a narrative describing its analysis of the progress achieved to-date vs. the Baseline Project Schedule, including any concerns regarding delays or potential delays, and any recommendations regarding mitigating actions.

3.2.4 If phased construction is deemed appropriate at the time of developing the Baseline Cost Model or during the development of the Detailed Project Schedule, and PMGAA and Design Professional approve, CMAR shall review the design and make recommendations regarding the phased issuance of Construction Documents to facilitate phased construction of the Work, with the objective of reducing the Project Schedule and/or Cost of the Work. CMAR shall take into consideration such factors as natural and practical lines of work severability, sequencing effectiveness, access and availability constraints, total time for completion, construction market conditions, labor and materials availability, and any other factors pertinent to saving time and cost.

3.2.5 Long Lead Time Items. As part of developing the Detailed Project Schedule, CMAR shall identify all long lead time materials, fabrications, equipment, or other items which may impact the Project Schedule and may require early action on the part of the Project Team. Dates for selecting and ordering long lead time items will be included and highlighted in the Detailed Project Schedule.

3.2.6 Equipment Plan. CMAR shall develop an Equipment Plan that addresses all rental and owned equipment, regardless of whether such equipment will be provided by CMAR or subcontractor(s), that will be necessary to construct the Project and the cost of which will be included as a Cost of the Work in the GMP Proposal. The Equipment Plan will seek to minimize the cost of the equipment to PMGAA and maximize the efficient and coordinated use of the equipment for completion of the Project. The Equipment Plan will not only include the costs and allowable lease rates for the equipment but will also include an equipment schedule that will be incorporated into the Detailed Project Schedule and the Schedule of Values submitted with the GMP Proposal.

3.3 DESIGN DOCUMENT REVIEWS

3.3.1 CMAR shall evaluate periodically the availability of labor, materials/equipment, cost-sensitive aspects of the design; and other factors that may create an unacceptable variance to the Baseline Cost Model and/or Baseline Project Schedule.

3.3. 2 CMAR shall recommend, in conjunction with the Project Team, those additional surface and subsurface investigations that, in its professional opinion, are required to provide the necessary information for CMAR to construct the Project. These additional investigations, if agreed to be necessary by the Project Manager and the Design Professional, shall be acquired by PMGAA and copies of the reports will be provided to CMAR.

3.3.3 CMAR shall meet with the Project Team as required to review designs during their development. CMAR shall familiarize itself with the evolving documents through pre-construction. CMAR shall proactively advise the Project Team and make recommendations on factors related to construction costs, and concerns pertaining to the feasibility and practicality of any proposed means and methods, selected materials, equipment and building systems, and, labor and material availability. CMAR shall furthermore advise the Project Team on proposed site improvements, excavation and foundation considerations, as well as, concerns that exist with respect to coordination of the Drawings and Specifications. CMAR shall use established value analysis principles in recommending cost-effective alternatives.

3.3.4 CMAR shall routinely conduct constructability and bid-ability reviews of the Drawings and Specifications as necessary to satisfy the needs of the Project Team. The reviews shall attempt to identify all discrepancies and inconsistencies in the Construction Documents especially those related to clarity, consistency, completeness and coordination of Work of Subcontractors and Suppliers.

3.3.5 CMAR shall evaluate whether: (a) the Drawings and Specifications are configured to enable efficient construction; (b) design elements are standardized; (c) construction efficiency is properly considered in the Drawings and Specifications; (d) module/preassembly design is prepared to facilitate fabrication, transport and installation; (e) sequences of Work required by or inferable from the Drawings and Specifications are practicable; (f) the design has taken into consideration efficiency issues concerning access and entrance to the site, laydown and storage of materials, staging of site facilities, construction parking, and other similar pertinent issues; and (g) the design maintains continued operation of the existing PMGAA operations, security and systems and maintains traffic on adjacent roadways. CMAR shall also review the Drawings and Specifications to ensure that what is depicted therein can be constructed as designed and shall promptly inform the Project Team of any issues.

3.3.6 CMAR shall check cross-reference and complementary Drawings and sections within the Specifications and in general evaluate whether: (a) the Drawings and Specifications are Sufficiently clear and detailed to minimize ambiguity and to reduce scope interpretation discrepancies; (b) named materials and equipment are commercially available and are performing well, or otherwise, in similar installations; (c) Specifications include alternatives in the event a requirement cannot be met in the field; and (d) in its professional opinion, the Project is likely to be subject to Differing Site Conditions.

3.3.7 The results of the reviews shall be provided to Project Team in formal, written reports clearly identifying all reviewed documents and the discovered discrepancies and inconsistencies in the Drawings and Specifications with notations and recommendations made on the Drawings, Specifications and other documents. CMAR shall meet with Project Team to discuss any findings and review reports.

3.3.8 CMAR's reviews shall be from a CMAR's perspective, and though it shall serve to eliminate/reduce the number of RFI's and changes during the construction phase, responsibility for the Drawings and Specifications shall remain with the Design Professional and not CMAR.

3.3.9 It is CMAR's responsibility to assist the Design Professional in ascertaining that, in CMAR's professional opinion, the Construction Documents are in accordance with Applicable Laws, Regulations, or Legal Requirements, building codes, sound engineering principle's rules and regulations. If CMAR recognizes that portions of the Construction Documents are at variance with applicable laws, statutes, ordinances, building codes, sound engineering principle's rules and regulations, it shall promptly notify the Project Team in writing, describing the apparent variance of deficiency. However, the Design Professional is ultimately responsible for the compliance of the Drawings and Specifications with those laws, statutes, ordinances, building codes, rules and regulations.

3.3.10 The Project Team shall routinely identify and evaluate using value analysis principles and alternate systems, approaches, design changes that have the potential to reduce Project costs while still delivering a high quality and fully functional Project consistent with the Project Program. If the Project Team agrees, CMAR in cooperation with the Design Professional, will perform a cost/benefit analysis of the alternatives and submit such in writing to the Project Team. PMGAA, through the Project Manager, will direct which alternatives will be incorporated into the Project. The Design Professional will have full design responsibility for the review and incorporation of CMAR suggested alternatives into the Drawings and Specifications. CMAR shall analyze the costs and schedule impacts of the alternatives against the Baseline Cost Model and Schedule and provide a recommendation for the Project Team's consideration and PMGAA's approval prior to the establishment of the GMP.

3.4 BASELINE COSTS MODEL, DETAILED COST ESTIMATES, AND SCHEDULE OF VALUES

3.4.1 At the conclusion of the Schematic and Programming CMAR will review all available information regarding the design and scope of the Project using CMAR's experience in performing similar work, knowledge of similar projects and current and projected construction costs and, based upon that review, shall develop a Baseline Cost Model for review by the Project Team and approval by PMGAA. Once approved by PMGAA, the Baseline Cost Model shall be continually referenced as detailed estimates are created as the design progresses throughout Pre-Construction until the final GMP for the entire Project is established. A final GMP for the entire Project must be established and approved by PMGAA prior to the start of construction. It is the responsibility of CMAR to ensure PMGAA has sufficient information to evaluate and approve a final GMP prior to the time necessary to start construction so construction can be completed within the Contract Time. The Project Detailed Cost Estimate shall be the best representation from CMAR of what the complete functional Project's construction costs will be as indicated by the most current available documents and will be constantly checked against the Baseline Cost Model. CMAR shall communicate to the Project Team and assumptions made in preparing the Baseline Cost Model. The Baseline Cost Model shall support CMAR's Detailed Cost Estimates and may be broken down initially as dictated by the available information, as required by PMGAA.

3.4.2 After receipt of the Design Professional's most current documents from certain specified pre-construction milestones, CMAR shall provide a draft Detailed Cost Estimate including a detailed written report detailing any variances to the Baseline Cost Model and Baseline Project Schedule. The Design Professional and CMAR will reconcile any disagreements on the estimate to arrive at an agreed upon Detailed Cost Estimate for the construction costs based on the scope of the Project through that specified pre-construction milestone. Pre-Construction milestones applicable to this paragraph are: SD Drawings, DD Drawings, 90% Construction Drawings and Final Reconciled Construction Drawing, if no consensus is reached, PMGAA will make the final determination. If the Project Team requires additional updates of the Detailed Cost Estimate beyond that specified in this paragraph, CMAR shall provide the requested information in a timely manner.

3.4.3 If at any point the Detailed Cost Estimate submitted to PMGAA exceeds the previously accepted Baseline Cost Model or previously approved Detailed Cost Estimate agreed to as set forth in Article 3.4.2 above, CMAR shall make appropriate recommendations to project Team on means/methods, materials, and or other design elements that it believes will reduce the estimated construction costs, such that it is equal to or less than the established Project Team's Baseline Cost Model.

3.4.4 Unless other levels of completion are agreed to in writing in the Construction Documents, at Schematic, Design and Construction submittals and included with the associated report, CMAR shall also submit to the Project Team for review and approval a Schedule of Values that complies with the following requirements. The Schedule of Values shall be directly related to the breakdowns reflected in the Detailed Project Schedule and CMAR's Detailed Cost Estimate. In addition, the Schedule of Values shall: (a) detail unit prices and quantity take-offs, (b) detail all other contingencies and unit price Work shown and specified in the detailed design documents.

3.4.5 CMAR is to track, estimate, price and address the Project Team's overall project cost issues that arise outside of the Baseline Cost Model and the latest approved Detailed Cost Estimate such as: PMGAA generated changes, Project Team proposed changes, alternate system analysis, constructability items and value engineering analysis. The system used to implement this process will be referred to as the Design Evolution Log. This is to be

addressed between the Baseline Cost Model, Schematic, Design and Construction Documents, and the bid packages for all Phases, if applicable.

3.4.6 CMAR shall submit to PMGAA a cash flow projection for the Project based on the current updated/revised Detailed Project Schedule and the anticipated level of payments for CMAR during the design and construction phases. In addition, based on information provided by PMGAA, CMAR shall prepare a cash flow projection for the entire Project based on historical records for similar types of projects to assist PMGAA in the financing process.

3.5 SUBCONTRACTOR AND MAJOR SUPPLIER SELECTIONS

3.5.1 Except as noted below, the selection of Subcontractors/Suppliers is the sole responsibility of CMAR. In any case, CMAR is solely responsible for the performance of the selected Subcontractors/Suppliers, and for compliance with the requirements of Title 34 of the Arizona Revised Statutes and Federal Requirements in the selection of Subcontractors/Suppliers, to the extent applicable. CMAR shall comply with its Subcontractor Selection Plan submitted with its Statement of Qualifications.

3.5.2 PMGAA may approve the selection of a Subcontractor(s) or Suppliers(s) based only on their qualifications when CMAR can demonstrate it is in the best interest of the Project. All Work that is performed, after such a qualifications-based selection, for a price that is negotiated by CMAR will be billed in accordance with the GMP for actual costs and may be subject to audit by PMGAA.

3.5.2.1 Qualifications based selection of a Subcontractor(s)/Supplier(s) should only occur prior to the submittal of the GMP Proposal and such a way as to not delay the start date of the Construction phase as defined in the Baseline Project Schedule.

3.5.2.2 If a Subcontractor/Supplier selection plan was submitted and agreed to by PMGAA, CMAR Shall apply the plan in the evaluation of the qualifications of a Subcontractor(s) or Supplier(s) and provide PMGAA with its review and recommendations.

3.5.2.3 CMAR must receive written PMGAA approval for each selected Subcontractor(s) and Supplier(s).

3.5.2.4 CMAR shall negotiate costs for services/supplies from each Subcontractor/Supplier selected under this method.

3.5.3 All Work shall be competitively bid, unless a Subcontractor or Supplier was selected pursuant to paragraph 3.5.2 above, <u>and in accordance with all DBE requirements</u>.

3.5.3.1 CMAR shall develop Subcontractor and Supplier interest, submit the names of a minimum of three qualified Subcontractors or Suppliers for each trade in the Project for approval by PMGAA and solicit bids for the various Work categories. If there are not three qualified Subcontractors/Suppliers available for a specific trade or there are extenuating circumstances warranting such, CMAR may request approval by PMGAA to submit less than three names.
Without prior written notice to PMGAA, no change in the recommended Subcontractors/Supplies shall be allowed.

3.5.3.2 If PMGAA objects to any nominated Subcontractor/Supplier or to any self-performed Work for good reason, CMAR shall nominate a substitute Subcontractor/Supplier that is acceptable to PMGAA.

3.5.3.3 CMAR shall distribute Drawings and Specifications, and when appropriate, conduct a Pre-Bid Conference with prospective Subcontractors and Suppliers.

3.5.3.4 If CMAR desires to self-perform certain portions of the Work, it shall request to be one of the approved Subcontractor bidders for those specific bid packages. CMAR's bid will be evaluated in accordance with the process identified below. If events warrant and PMGAA concurs that it is necessary in order to ensure compliance with the Project Schedule and/or the most recent Detailed Cost Estimate, CMAR may be authorized to self-perform Work without bidding or rebidding the Work. When CMAR self-performs work without bidding, only the actual costs associated with performing the Work in accordance with the approved GMP will be billed and may be subject to audit by PMGAA.

3.5.3.5 CMAR shall receive, open, record and evaluate the bids; provided, however, that if CMAR or one of its affiliates is bidding to self-perform the Work that is the subject of the bid, then the bids shall be received, opened, recorded and evaluated by Project Manager instead of CMAR. Bids for each category of Work shall be opened and recorded at a pre-determined time. The apparent low bidders shall be interviewed to determine the responsiveness of their proposals. In evaluating the responsiveness of bid proposals CMAR, in addition to bid price, may consider the following factors: past performance on similar projects, qualifications and experience of personnel assigned, quality management plan, approach or understanding of the Work to be performed, and performance schedule to complete the Work. The final evaluation of Subcontractor/Supplier bids shall be done with Project Manager in attendance to observe and witness the process. CMAR shall resolve any Subcontractor/Supplier bid withdrawal, protest or disqualification in connection with the award at no increase in the Cost of Work.

3.5.4 CMAR shall be required to prepare two different reports on the subcontracting process.

3.5.4.1 Within fifteen days after each major Subcontractor/Supplier bid opening process; CMAR shall prepare a report for PMGAA's review and approval identifying the recommended Subcontractors/Supplier for each category of Work. The report shall detail: (a) the name of the recommended Subcontractor/Supplier and the amount of the Subcontractor/Supplier bid for each sub-agreement; (b) the sum of all recommended Subcontractor/Supplier bids received; (c) and trade work and its cost that CMAR intends to self-perform, if any.

3.5.4.2 Upon completion of the Subcontractor/Supplier bidding process, CMAR shall submit a summary report to PMGAA of the entire Subcontractor/Supplier selection process. The report shall indicate, by bid process, all Subcontractors/Suppliers contacted to determine interest, the Subcontractors/Suppliers solicited, the bids received and costs negotiated, and the recommended Subcontractors/Suppliers for each category of Work.

3.5.5 The approved Subcontractors/Suppliers shall provide a Schedule of Values with their bid proposals, which shall be used to create the overall Project Schedule of Values.

3.5.6 If after receipt of sub-bids or after award to Subcontractors and Suppliers, PMGAA objects to any nominated Subcontractor/Supplier or to any self-performed Work based upon any

reasonable basis, CMAR shall nominate a substitute Subcontractor or Supplier, preferably if such option is still available, from those who submitted Subcontractor bids for the Work affected. Once such substitute Subcontractors and Suppliers are consented to by PMGAA, CMAR's proposed GMP for the Work or portion thereof shall be correspondingly adjusted to reflect any higher or lower costs form any such substitution.

3.6 GMP PROPOSAL

3.6.1 CMAR shall submit a GMP Proposal for the entire Work, and for each phase (if required) of the Work, at the times set forth in the Pre-Construction Schedule included in attached Exhibit A. The GMP Proposal shall be presented in a format acceptable to PMGAA based upon the attached Exhibit B. PMGAA may change the schedule, format, and/or requirements for the GMP Proposal as it deems necessary during Pre-Construction and may request resubmittal of the GMP Proposal to reflect such changes.

3.6.2 For the purpose of the GMP Proposal, the parties agree that:

1. The CMAR Fee shall be equal to 5.50% (percent) of the Direct Costs;
2. General Conditions costs shall be a fixed amount agreed to as part of the Baseline Cost Model.

3.6.3 The GMP Proposal shall not exceed PMGAA's budget for the construction of the Project, which is $20,000,000 unless otherwise approved or revised by PMGAA ("Construction Budget").

3.6.4 When a GMP Proposal is submitted for a phase of the Work, the GMP will have a Detailed Cost Estimate of the Costs of the Work in each phase of the Work that is being proposed plus the current estimate for all other Work. PMGAA will not approve the GMP for the phase of work without a total estimate for the complete Project. PMGAA may request a GMP Proposal for all or any portion of the Project and at any time during pre-construction. Any GMP Proposals submitted by CMAR shall be based on and consistent with Baseline Cost Model and the current update/revised Detailed Cost Estimate at the time of the request and include any clarifications or assumptions upon which the GMP Proposal(s) are based.

3.6.5 A GMP Proposal for the entire Project shall be the sum of the Cost of the Work, CMAR Fee, and General Conditions Cost. CMAR guarantees to complete the Project at or less that the final GMP Proposal amount plus approved Change Orders. CMAR shall be responsible for any costs for expenses that would cause the Cost of the Work actually incurred, including the Construction Fee and General Conditions Costs, to exceed the GMP.

3.6.6 CMAR shall prepare its GMP Proposal in accordance with PMGAA's request for GMP Proposal requirements based on the most current completed Drawings and Specifications at that time, which unless otherwise directed by PMGAA in writing, shall be at Construction Drawings. CMAR shall mark the face of each document of each set upon which its GMP Proposal is based. These documents shall be identified as the GMP Plans and Specifications. CMAR shall send two sets of those documents to the Project Manager, keep one set and return the fourth set to the Design Professional.

3.6.7 An updated/revised Detailed Project Schedule, Equipment Plan, and Schedule of Values shall be included in any GMP Proposal(s), all of which shall reflect the GMP Plans and Specifications the Detailed Project Schedule shall be shown in relationship to the Project Schedule and identify any variance to the Baseline Project Schedule. Any such Detailed Project Schedule updates/revisions shall continue to comply with the requirements of Article 3.1.2 through 3.2.5 of this contract.

3.6.8 GMP Proposals(s) Review and Approval

3.6.8.1 CMAR shall meet with the Project Team to review the GMP Proposal(s) and the written statement of its basis. In the event the Project Team discovers inconsistencies or inaccuracies in the information presented, CMAR shall make adjustments as necessary to the GMP Proposal.

3.6.8.2 If during the review and negotiation of GMP Proposals design changes are required, PMGAA may authorize and cause the Design Professional to revise the GMP Plans and Specifications to the extent necessary to reflect the agreed-upon assumptions and clarifications contained in the final approved GMP Proposal. Such revised GMP Plans and Specification will be furnished to CMAR. CMAR shall promptly notify the Project Team in writing if any such revised GMP Plans and Specifications are inconsistent with the agreed upon assumptions and clarifications.

3.6.9 All portions of or items comprising the GMP Proposal are subject to audit by PMGAA, as deemed appropriate by PMGAA, including, without limitation, any based upon unit prices or Work to be self-performed by CMAR, or its affiliates.

3.7 PAYMENT PROCEDURE FOR PRE-CONSTRUCTION SERVICES

3.7.1 Requests for monthly payments by CMAR for Pre-Construction Services shall be submitted monthly and shall be accompanied by a progress report, detailed invoices and receipts, if applicable. Any requests for payment shall include, as a minimum, a narrative description of the tasks accomplished during the billing period, a listing of any Deliverables submitted, and copies of any Subconsultants' requests for payment, plus similar narrative and listings of Deliverables associated with their Work. Payment for services negotiated as a lump sum shall be made in accordance with the percentage of work completed during the preceding month.

3.7.2 In no event will PMGAA pay more that ninety (90%) of the Contract Price until final acceptance of ALL Pre-Construction Services, and award of the final approved Construction Services Contract for the entire Project by PMGAA Board. If CMAR does not prepare a GMP Proposal that is acceptable to PMGAA, or the GMP Proposal exceeds PMGAA's Construction Budget, then CMAR understands and acknowledges that it will forfeit any right to receive the final 10% of the Contract Price being retained by PMGAA.

3.7.3 CMAR agrees that no charges or claims for costs or damages of any type shall be made by it for any delays or hindrances beyond the reasonable control of PMGAA during the progress of any portion of Pre-Construction Services specified in this Contract. Such delays or hindrances, if any, shall be solely compensated for by an extension of time for such reasonable period and may be mutually agreed between the parties. It is understood and agreed, however, that permitting CMAR to proceed to complete any such Services, in whole or in part after the date to which the time of completion may have been extended, shall in no way act as a waiver on the part of PMGAA of any of their respective legal rights herein.

3.7.4 No compensation to CMAR shall be allowed contrary to Article I, Chapter I, Title 34 of the Arizona Revised Statutes.

3.7.5 If any service(s) executed by CMAR is abandoned or suspended in whole or in part, for a period of more than 180 days through no fault of CMAR, CMAR is to be paid for the services performed prior to the abandonment or suspension.

3.8 ADDITIONAL PRE-CONSTRUCTION SERVICES

3.8.1 Additional services which are outside the scope of the services required under the Contract Documents shall not be performed by CMAR without prior written Authorization from PMGAA. Additional services, when authorized by an executed written Change Order by PMGAA, shall be compensated for by a fee mutually agreed upon in such Written Change Order between PMGAA and CMAR.

3.8.2 No claim for additional services, extra work done, or materials furnished by CMAR shall be allowed by PMGAA except as provided herein, nor shall CMAR provide any additional services, do any work, or furnish any material(s)not covered by this Contract unless such work or material is first authorized in writing by the Project Manager. Work or material(s) furnished by CMAR without such prior written authorization shall be CMAR's sole jeopardy, cost, and expense, and CMAR hereby agrees that without prior written authorization no claim for compensation for such services, work or materials furnished shall be made, and PMGAA shall not be responsible for such costs.

3.8.3 No Work may be performed under this Pre-construction Services Contract, without prior written approval by PMGAA. As an example, all procurement of long lead time items that must be procured to support the construction schedule or site investigative Work necessary to complete Pre-Construction Services, if done by the CMAR, will be performed only after the long lead time items or investigative Work has been approved and accepted in writing by PMGAA and all such Work shall be done only under an executed Contract for Construction Services, or pursuant to a prior written direction from PMGAA to engage in such procurement..

3.9 SURVIVAL OF THE DESIGN SERVICES CONTRACT, DUTIES, OBLIGATIONS AND WARRANTIES

If the GMP Proposal is accepted by PMGAA and a Construction Contract is entered into between PMGAA and CMAR, the duties, obligations and warranties of CMAR under the Pre-Construction Services Contract survive and are incorporated into the resulting Construction Contract.

ARTICLE 4 – CONSTRUCTION SERVICES

If PMGAA accepts CMAR's GMP Proposal, CMAR and PMGAA may enter into a Construction Services Contact for Construction of the Project based upon CMAR's Pre-Construction Services performed and GMP Proposal and detailed Project Schedule submitted pursuant to this Contract. The terms of the Construction Services Contract are being negotiated contemporaneously with this Contract and CMAR agrees to execute the Construction Services Contract, without further modification, upon acceptance by PMGAA of the GMP Proposal. All of CMAR's obligations, duties and warranties in relation to Pre-Construction Services and Deliverables (including specifically the GMP Proposal) survive the completion

of this Contract and will be incorporated into the Construction Services Contract.

ARTICLE 5 – PMGAA FURNISHED INFORMATION

5.1 PMGAA, AT NO COST TO CMAR, WILL FURNISH THE FOLLOWING TO CMAR:

5.1.1 One copy of data in PMGAA's possession or control which PMGAA determines in its discretion to be pertinent to the Work. However, CMAR shall be responsible for searching the records and requesting information it deems reasonably required for the Project.

5.1.2 Electronic copies of programs, reports, drawings, and specifications reasonably required by CMAR, to the extent in the possession of PMGAA.

5.1.3 Additional information to be provided by PMGAA, if any, is listed below:

ARTICLE 6 – CONTRACT TIME

Contract Duration is 175 Calendar Days.

The Pre-Construction Services described in this Contract shall be performed by CMAR in accordance with the Pre-Construction Schedule set forth in attached Exhibit A. Failure on the part of CMAR to adhere to the Pre-Construction Schedule requirements for activities for which it is responsible and in control will be deemed a material breach and sufficient grounds for termination for cause of this Contract by PMGAA.

ARTICLE 7 – CONTRACT PRICE

7.1 In exchange for CMAR's full, timely and acceptable performance of the Services under this Contract, and subject to all of the terms of this Contract, PMGAA will pay CMAR a not to exceed price of $249,610 (the "Contract Price"). The method of payment for this contract is Time and Materials, Not-to-Exceed. The amount paid shall not exceed the amount listed in Article 7.1 for actual costs incurred, based on the negotiated hourly rates and reimbursement schedule as defined in Exhibit A.

7.2 The Contract Price is all-inclusive, and PMGAA shall not pay any additional amounts, costs expense, except for only those specifically designated reimbursable costs, without markup, as set forth in Exhibit A.

ARTICLE 8 – PAYMENTS

The Contract Price shall be paid based upon the completion of tasks comprising the Pre-Construction Scope of Work as shown in Exhibit A.

ARTICLE 9 – CHANGES

9.1 PMGAA reserves the right to make such changes in the plans and specifications for the Work, as it may deem appropriate and any such change as set forth in a written Change Order shall be deemed a part of this Contract as if originally incorporated herein.

9.2 If design changes are required, PMGAA's and CMAR's responsibilities shall be in accordance with Article 3.6.8.2 of this Contract.

ARTICLE 10 – SUSPENSION AND TERMINATION

10.1 Criteria for Termination for Cause. PMGAA may terminate the Contract if CMAR:

1. more than once refuses or fails to supply enough properly skilled workers or proper materials;
2. fails to make payment to Subcontractors for materials or labor in accordance with the respective agreements between the CMAR and the Subcontractors;
3. disregards laws, ordinances, or rules, regulations or orders of a public authority having jurisdiction;
4. breaches any provision of the Contract;
5. fails to furnish PMGAA with assurances satisfactory to PMGAA evidencing the CMAR's ability to complete the work in compliance with all the requirements of the Contract;
6. fails after commencement of the work to proceed diligently and continuously with the work for more than seven (7) days, except as permitted under the Contract and/or;
7. violates any provision of the PMGAA Rules and Regulations or Minimum Standards, as amended from time to time, and as incorporated into the Contract by reference (Exhibit C).

10.1.2 Effect of Termination for Cause. When any of the above conditions exist, PMGAA, may without prejudice to any other rights or remedies of PMGAA and after giving the CMAR ten (10) days' written notice, terminate the Contract and may:

1. take possession of the Site and all materials, equipment, tools, and construction equipment machinery thereon owned by the CMAR;
2. accept assignment of subcontracts, and
3. finish the work by whatever reasonable method PMGAA may deem expedient.

10.1.3 CMAR Right to Receive Payment. When PMGAA terminates the Contract for one of the reasons stated in Article 10.1.1, the CMAR shall not be entitled to receive further payment until the work is finished.

10.1.4 Costs for Finishing Work. If the unpaid balance of the Contract Sum exceeds costs of finishing the work, including compensation for the Design Professional services and expenses made necessary thereby, such excess shall be paid to the CMAR. If such costs exceed the unpaid balance, the CMAR shall pay the difference to PMGAA.

10.2 SUSPENSION BY PMGAA FOR CONVENIENCE.

10.2.1 PMGAA's Right. PMGAA may, without cause, order the CMAR in writing to suspend, delay or interrupt the work in whole or in part for such period of time as PMGAA may determine.

10.2.2 Adjustment in Contract Sum. An adjustment shall be made for increases in the cost of performance of the Contract, including profit on the increased cost of performance, caused by suspension, delay or interruption. No adjustment shall be made to the extent:

1. that performance is, was or would have been suspended, delayed or interrupted by another cause for which the CMAR is responsible; or
2. that an equitable adjustment is made or denied under another provision of this Contract.

10.2.3 Method for Adjustment in Contract Sum. Adjustments made in the cost of performance may have a mutually agreed fixed or percentage fee.

10.3 PMGAA'S TERMINATION FOR CONVENIENCE.

10.3.1 Effect of Termination for Convenience. PMGAA reserves the right to terminate the Contract for convenience and without cause even if CMAR has not failed to perform any part of the Contract. Termination of the work hereunder shall be effected by written notice to the CMAR. Upon receipt of such notice, CMAR shall, unless the notice otherwise directs:

1. Immediately discontinue the work and the placing of all orders and subcontracts in connection with this Contract;
2. Immediately cancel all of the existing orders and subcontracts made hereunder;
3. Immediately transfer to PMGAA all materials, supplies, work in progress, appliances, facilities, machinery and tools acquired by the CMAR in connection with the performance of the Contract, and take such action as may be necessary or as PMGAA may direct for protection and preservation of the work relating to this Contract; and
4. Deliver all plans, Drawings, Specifications and other necessary information to PMGAA.

10.3.2 CMAR's Exclusive Remedy. If PMGAA terminates the Contract for convenience, the following shall be the CMAR's exclusive remedy:

1. Reimbursement of all actual expenditures and costs approved by PMGAA as having been made or incurred in performing the work;
2. Reimbursement of expenditures made and costs incurred with PMGAA's prior written approval in settling or discharging outstanding commitments entered into by the CMAR in performing the Contract; and
3. Payment of profit, in so far as profit is realized hereunder, of an amount equal to the estimated profit on the entire Contract at the time of termination multiplied by the percentage of completion of the work. In no event shall the CMAR be entitled to anticipated fees or profits on work not required to be performed.

10.3.4 Warranties, Guarantees and Indemnified Parties to Remain in Effect**.** All obligations of the CMAR under the Contract with respect to completion of the work, including but not limited to all warranties, guarantees and indemnities, shall apply to all work completed or substantially completed by the CMAR prior to a convenience termination by PMGAA. Notwithstanding the above, any convenience termination by PMGAA or payments to the CMAR shall be without prejudice to any claims or legal remedies that PMGAA may have

against the CMAR for any cause, including liquidated damages assessed for CMAR's delays to any work Milestone Dates.

10.3.5 Conversion of Termination for Cause to Termination for Convenience. Upon a determination that a termination of this Contract other than a termination for convenience under this Article was wrongful or improper for any reason, such termination shall automatically be deemed converted to a convenience termination under this Article 10, and the CMAR's remedy for such wrongful termination shall be limited to the recoveries specified under Section 10.3.2.

10.3.6 Remedy Limited to Damages. In the event that CMAR is terminated, whether for cause or convenience, the CMAR's sole remedy shall be for damages. In no event shall the CMAR be entitled to reinstatement or other equitable relief from a court or through alternative dispute resolution.

10.3.7 Notice that Contract is Subject to Termination Provisions of A.R.S. § 38-511.The parties acknowledge, and as required by law, notice is hereby given that this Contract is subject to A.R.S. § 38-511.

ARTICLE 11 – INSURANCE

11.1 For pre-construction services covered under this Contract, CMAR shall provide insurance in accordance with this Article 11.

11.2 CMAR shall provide proof of such insurance and all required endorsements in forms Acceptable to PMGAA prior to commencing any Work or providing any Services under this Contract.

11.3 Failure to provide proof of insurance and the required endorsements acceptable to PMGAA will be a material breach and grounds for termination for cause of this Contract by PMGAA.

11.4 The CMAR and Subcontractors shall purchase from and maintain in a company or companies authorized to do business in Arizona the following insurance against claims for injuries to persons or damages to property which may arise from or in connection with the performance of the work hereunder by the CMAR, his agents, representatives, employees, or subcontractors. Such insurance shall be effective for the duration of the contract and for three (3) years thereafter.

11.5 Workers' Compensation. Workers' Compensation insurance with statutory limits as required by the State of Arizona and Employer's Liability insurance with limits of no less than $1,000,000 per occurrence for bodily injury, $1,000,000 per employee for bodily injury by disease and a $1,000,000 policy limit for bodily injury by disease. Such Workers' Compensation insurance will cover obligations imposed by federal and state statutes having jurisdiction of CMAR's or Subcontractors' employees while performing work at locations other than the Site and shall cover CMAR's employees after Substantial Completion of the work and Subcontractor's employees after Subcontractor has substantially performed its Subcontract.

11.6 Commercial General Liability. Commercial General Liability insurance, with a combined single limit of $5,000,000 per occurrence and in the annual aggregate. Such insurance shall include coverage for Bodily Injury, Property Damage, Personal Injury, Broad Form Property Damage (including Completed Operations), Contractual, CMARs' Protective, Products and

Completed Operations, and the hazards commonly referred to as "XCU." This insurance shall also be required for work performed at locations other than the Site, shall cover CMAR after Substantial Completion of the work, and shall cover Subcontractor after Subcontractor has substantially performed its Subcontract. Further, this insurance shall contain a severability of interest provision.

11.7 Business Automobile Liability. Business Automobile Liability insurance, with a combined single limit no less than $5,000,000 combined single limit per accident for Bodily Injury and Property Damage with respect to all vehicles used in performance of the work on or off the Site, whether owned, non-owned, leased, hired, assigned, or borrowed.

11.8 Additional Insured. The policies required by Articles 11.6, and 11.7 herein shall be endorsed to include Phoenix-Mesa Gateway Airport Authority, their officer's employees, successors, their Design Professional and assigns as additional insured, shall provide that the insurance shall be primary, and shall stipulate that any insurance carried by the additional insured and their officers or employees, shall not be contributory insurance.

11.9 Waiver. CMAR and Subcontractors waive all rights of recovery against Phoenix-Mesa Gateway Airport Authority and, their directors, officers, employees, successors and their Design Professional and assigns, and shall require its insurers to waive all rights of subrogation against Phoenix-Mesa Gateway Airport Authority and the Design Professional, and all of their respective directors, officers, employees, successors and assigns.

11.10 CMAR to Provide Certificates of Insurance. Before commencing any work under this Contract, CMAR shall furnish PMGAA with Certificates of Insurance issued by CMAR's and Subcontractors' insurer(s), as necessary, in a form acceptable to PMGAA, as evidence that the insurance policies, including all applicable endorsements, providing the coverage, conditions, and limits required by this Article 11, are in full force and effect. PMGAA has the right to request and receive promptly from the CMAR certified copies of any or all of such insurance policies and/or endorsements. PMGAA will not be obligated, however, to review such certificates, policies, and endorsements, or to advise CMAR of any deficiencies in such documents, and such receipts shall not relieve CMAR from, or be deemed a waiver of, PMGAA's right to insist on strict fulfillment of CMAR's obligations hereunder.

11.11 Cancellation Notice. CMAR's and Subcontractors' Certificates of Insurance shall identify the Contract number and shall provide for not less than thirty (30) days' advance notice of any cancellation, termination, or alteration. All such certificates, endorsements, and notices shall be sent to the following:

PMGAA:	Phoenix-Mesa Gateway Airport Authority
Address:	5835 South Sossaman Road
	Mesa, Arizona 85212-6014
Attn:	Mr. Bob Draper, PE – Engineering and Facilities Director

11.12 Costs of Insurance. Costs of all insurance coverage required by Section 11 are the sole responsibility of the CMAR.

11.13 Cancellation of Insurance. In the event any insurance coverage for the work is cancelled or terminated, CMAR agrees to replace the insurance without any lapse of protection to PMGAA.

11.14 Contractual Obligations. The stipulation of insurance coverage in this Article 11 shall not be construed to limit, qualify, or waive any liabilities or obligations of CMAR, assumed or otherwise, under this Contract.

11.15 Notice of Loss. All physical loss or damage to the work or to PMGAA property must be reported immediately to PMGAA.

11.16 Higher Limits. If the CMAR maintains higher limits than the minimums stated in this Article 11, PMGAA requires, and shall be entitled to, coverage for the higher limits maintained by the contractor. Any available insurance proceeds in excess of the specified minimum limits of insurance and coverage shall be available to PMGAA.

11.17 Deductibles and Self-Insured Retentions. Any deductibles or self-insured retentions must be declared to, and approved by, PMGAA. At the option of PMGAA, either: the CMAR shall reduce or eliminate such deductibles; or the CMAR shall provide a financial guarantee satisfactory to PMGAA guaranteeing payment of losses and related investigations, claim administration, and defense expenses.

11.18 Claims Made Policy. No Claims Made policies will be accepted.

11.19 Acceptability of Insurers. Insurance is to be placed with insurers with a current A.M. Best rating of no less than "A-"unless otherwise acceptable to PMGAA.

11.20 Subcontractors. CMAR shall require and verify that all subcontractors maintain insurance meeting all the requirements stated herein, and CMAR shall ensure that PMGAA is an additional insured on insurance from subcontractors.

11.21 Special Risks or Circumstances. PMGAA reserves the right to modify these requirements, including limits, based on the nature of the risk, scope of services, prior experience, insurer, coverage, or other special circumstances

ARTICLE 12 – INDEMNIFICATION

12.1 To the fullest extent permitted by law, Design Professional or CMAR, its successors, assigns, and guarantors, shall indemnify and hold harmless PMGAA, and its officers and employees, from liabilities, damages, losses and costs, including reasonable attorney fees and court costs, to the extent caused by the negligence, recklessness or intentional wrongful conduct of Design Professional, CMAR, or other persons employed or used by Design Professional or CMAR in the performance of this Contract

12.2 If a court of law determines that this section is void under A.R.S. § 34-226 because a word, words, or phrase in this section makes this section void under A.R.S. § 34-226, then such word, words, or phrase (as applicable) shall be deemed to be stricken to the extent necessary so that this section is not void under A.R.S. § 34-226 and the remaining obligations shall remain in full force and effect; and the language of this section shall be retroactively reformed to the extent reasonably possible in such a manner so that the reformed language provides essentially the same rights and benefits to the fullest extent permitted by A.R.S. § 34-226(B).

ARTICLE 13 – DISPUTE RESOLUTION

13.1 All disputes arising out of or relating to the Contract, the Work or the Project shall be resolved pursuant to the Dispute Resolution.

13.2 CMAR agrees that during any dispute between the parties, CMAR will continue to perform its obligations under the Contract until such dispute is resolved.

13.3 Notwithstanding any other provision in this Contract, PMGAA has the right to immediately file in court and pursue an action for a temporary restraining order and/or injunctive relief against CMAR if PMGAA determines that such action is necessary to protect its interests under the Contract, to obtain specific performance of any provision of the Contract, to advance the completion of the Project, or to protect health, welfare and/or safety, including without limitation, an action of an order directing CMAR to continue or return to construction the Work under the Contract.

13.4 PMGAA and CMAR may adjudicate any dispute between them arising out of or relating to this Contract through alternative dispute resolution if they mutually agree. PMGAA and CMAR shall include a similar alternative dispute resolution provision in all agreements with all other contractors, subcontractors, suppliers, and consultants retained for the Project, and they shall require these contractors, subcontractors, and suppliers to include similar alternative dispute resolution provisions in all contracts relating to the Project.

ARTICLE 14 – ALLOWANCES

14.1 UNLESS OTHERWISE PROVIDED IN THE CONTRACT DOCUMENTS:

14.1.1 The CMAR shall include in the Contract Price all Allowances stated in the Contract Documents and agreed to in writing by PMGAA.

14.1.2 Whenever the costs is more or less than the Allowance, the Contract Sum shall be adjusted accordingly by Change Order.

WITNESS WHERE OF, the parties here to executed this Contract through their duly authorized representatives and bind their respective entities as of the effective date.

"PMGAA"

Phoenix-Mesa Gateway Airport Authority, a joint powers airport authority authorized by the State of Arizona

_____

J. Brian O'Neill, A.A.E., Executive Director / CEO

_____

Date

"CMAR"

McCarthy Building Companies, Inc., a Missouri S-Corporation

Signature Brandon J Moon

Name BRANDON J. MOON

Title PROJECT DIRECTOR

Date SEPTEMBER 7, 2021

EXHIBIT A – PRE-CONSTRUCTION SERVICES SCOPE OF WORK AND SCHEDULE

All terms and conditions are set forth in the Contract. Any terms and conditions and/or exceptions noted in the CMAR's proposal, GMP, or other documents do not apply unless agreed to in this Contract or an approved addendum.

See following Scope and Fee

September 2, 2021

Mr. Bob Draper
Engineering and Facilities Director
Phoenix Mesa Gateway Airport Authority

Re: Phoenix-Mesa Gateway Airport – Terminal Modernization
PMGAA Project No. 1201
CMAR Pre-Construction Services Proposal

Dear Mr. Draper:

McCarthy Building Companies, Inc. is pleased to submit our Pre-construction Services Proposal for the Phoenix Mesa Gateway Terminal Modernization Project. Per article 7.1 of the Pre-construction Services Agreement, the method of payment for this contract is Time and Materials, **Not-to-Exceed the amount of $249,610** for services to be provided between September of 2021 and March of 2022 (175 Calendar Days).

Attached you will find the following information to support our proposal.

- Scope of Services
- Assumptions and Clarifications
- Summary of Costs
- Pre-Construction Staff Rates
- Pre-Construction Staff Budget
- Pre-Construction Staff Estimated Allocation
- Reimbursable Equipment, Material, and Tasks
- Sample GMP Spreadsheet
- Insurance Certificate
- Attachment A – Subcontracting and Outreach Efforts Summary - Kuniklo

We are looking forward to working with you and the entire project team on the Terminal Modernization Project. Should you have any questions, please feel free to contact me via e-mail (bmoon@mccarthy.com), or cell phone at (480) 261-6222.

Sincerely,

McCarthy Building Companies, Inc.

Brandon J. Moon
Project Executive

September 2, 2021

SCOPE OF SERVICES

Baseline Cost Model Development

- Evaluate Program Design Scope
- Develop Program Design Estimate
- Reconciliation of Baseline Cost Model with 3rd Party Estimator
- Provide a written evaluation of PMGAA's Project Program and Budget, inclusive of the appropriateness of each
- Establish a Mutually agreeable CMAR Fee
- Establish General Conditions Costs (Fixed Fee)

Schematic Design, Design Development, 90% CD's and Final CD's

- Ongoing best value analysis of design
- Identification and pricing of potential alternate materials and equipment along with a Cost / Benefit Analysis
- Continuous cost model pricing and budget validation
- Trend log pricing through design evolution (Design Evolution Log)
- Development of detailed cost estimate deliverable inclusive of any assumptions and clarifications
- Third party review/ reconciliation of cost
- Develop Schedule of Values for the project

Subcontractor Bidding and GMP Development

- Distribute Drawings and Specifications to potential bidders
- Hold pre-bid conference with prospective Subcontractors and Suppliers
- Subcontracting Reports
    - Recommendation of Subcontractor / Supplier Award and any Self-Perform scope of work
    - Subcontractor / Supplier Summary Report
- Provide 4 Sets of GMP Drawings (2 PMGAA, 1 DWL, 1 McCarthy)
- GMP Proposal Review with the Project Team

Meetings & Presentations

- Project Management Meetings
- Project Workshops
- Stakeholder Engagement / Coordination Meetings
- Special Project Meetings
- Construction Document Reviews
- Public Agency and Community Meetings / Presentations
- Partnering Meetings
- Team Meetings (Owner, Design Team, and Consultants)
- Internal CMAR Meetings
- Other Meetings as Required

Schedule Development (Article 3.2)

- Validation of overall project Schedule Duration
- Development and Maintenance of a Detailed Project Schedule with input from other team members
- Bi-Weekly Schedule Updates for Team Meetings
- Schedule Update Narratives
- Identification of Long Lead Items and Early Procurement Options
- Equipment Plan Development
- Cash Flow Projections

Logistics Plans

- Evaluation of Existing Conditions / Project Constraints
- Site Logistic Plan Development
- Laydown Area
- Project Site Office / Parking Plan

Design Document Reviews (Article 3.3)

- Establish Bluebeam Studio Session for document review
- Recommend surface and subsurface investigations required
- Provide Value Analysis and cost-effective alternates
- Cross Check reference and complimentary Drawings for conformance with Design Documents
- Verify Access requirements for MEP and Special Systems equipment
- Coordinate Construction Tolerances for equipment and materials
- Propose alternate solutions for coordination conflicts
- Clarify Design Intent for prospective bidders
- Document findings / transmit to Owner and Design Team
- Prepare a written report of Document Review findings and review with PMGAA and the Design Team

Subcontractor and Major Supplier Selection (Article 3.5)

- DBE Subcontractor Outreach and Establish participation goals for the project
- Identify Subcontractor pool for individual projects and incorporate recommendations from PMGAA and other project stakeholders
- Identify selection process based on complexity of scope of work, schedule, early procurement, and other constraints (Qualification vs. Competitive Bid)
- Submit subcontractor selection plan to PMGAA for review and approval
- Identify Qualification Based Subcontractor or Suppliers recommendations and gain approval from PMGAA

General

- Prepare monthly payment requests and a monthly progress report
- Provide Insurance in Accordance with Article 11

September 2, 2021

ASSUMPTIONS AND CLARIFICATIONS

- 2021 Labor Rates have been used as the basis of this proposal. Labor rates include wages, burden, computer, software, vehicle, fuel / vehicle maintenance, and cell phones.
- Preconstruction services and staffing resources are based on anticipated needs for multiple projects based on a team mix. McCarthy will work with PMGAA to provide the appropriate resources based on the project needs.
- Services have been included based on a cost-plus basis based on the rates included in the Scope of Services Estimate.

September 2, 2021

SUMMARY OF COSTS

Preconstruction Services - Staff **(T&M)**	$185,110
Office Equipment & Supplies **(Reimbursible)**	$7,000
Consultant / Subcontractor **(Allowances)**	$27,500
Utility Mapping / Site Investigation **(Allowances)**	$30,000
Not-To-Exceed Total	**$249,610**

September 2, 2021

PRE-CONSTRUCTION STAFF RATES

Project Executive	
DESCRIPTION	**$/HR**
Base Rate	$ 80.00
Burden	$ 50.75
Computer	$ 1.44
Software	$ 5.79
Cell Phone	$ 0.72
Truck	$ 5.77
Fuel / Vehicle Service	$ 2.89
Subtotal	**$ 147.37**
Fee @ 5.5%	$ 8.11
Insurance @ .912%	$ 1.42
Total Cost / Hour	**$156.89**

Sr. Project Manager	
DESCRIPTION	**$/HR**
Base Rate	$ 66.15
Burden	$ 44.72
Computer	$ 1.44
Software	$ 5.79
Cell Phone	$ 0.72
Truck	$ 5.77
Fuel / Vehicle Service	$ 2.89
Subtotal	**$ 127.49**
Fee @ 5.5%	$ 7.01
Insurance @ .912%	$ 1.23
Total Cost / Hour	**$135.73**

Superintendent	
DESCRIPTION	**$/HR**
Base Rate	$ 57.69
Burden	$ 38.85
Computer	$ 1.44
Software	$ 5.79
Cell Phone	$ 0.72
Truck	$ 5.77
Fuel / Vehicle Service	$ 2.89
Subtotal	**$ 113.16**
Fee @ 5.5%	$ 6.22
Insurance @ .912%	$ 1.09
Total Cost / Hour	**$120.47**

Pre-construction Manager	
DESCRIPTION	**$/HR**
*Base Rate	$ 143.00
Burden	*Included*
Computer	*Included*
Software	*Included*
Cell Phone	*Included*
Truck	*Included*
Fuel / Vehicle Service	*Included*
Subtotal	**$ 143.00**
Fee @ 5.5%	$ 7.87
Insurance @ .912%	$ 1.38
Total Cost / Hour	**$152.24**

Sr. Estimator	
DESCRIPTION	**$/HR**
*Base Rate	$ 115.00
Burden	*Included*
Computer	*Included*
Software	*Included*
Cell Phone	*Included*
Truck	*Included*
Fuel / Vehicle Service	*Included*
Subtotal	**$ 115.00**
Fee @ 5.5%	$ 6.33
Insurance @ .912%	$ 1.11
Total Cost / Hour	**$122.43**

Sr. MEP Estimator	
DESCRIPTION	**$/HR**
*Base Rate	$ 87.00
Burden	*Included*
Computer	*Included*
Software	*Included*
Cell Phone	*Included*
Truck	*Included*
Fuel / Vehicle Service	*Included*
Subtotal	**$ 87.00**
Fee @ 5.5%	$ 4.79
Insurance @ .912%	$ 0.84
Total Cost / Hour	**$ 92.62**

Estimator	
DESCRIPTION	**$/HR**
*Base Rate	$ 87.00
Burden	*Included*
Computer	*Included*
Software	*Included*
Cell Phone	*Included*
Truck	*Included*
Fuel / Vehicle Service	*Included*
Subtotal	**$ 87.00**
Fee @ 5.5%	$ 4.79
Insurance @ .912%	$ 0.84
Total Cost / Hour	**$ 92.62**

Scheduling Manager	
DESCRIPTION	**$/HR**
*Base Rate	$ 115.00
Burden	*Included*
Computer	*Included*
Software	*Included*
Cell Phone	*Included*
Truck	*Included*
Fuel / Vehicle Service	*Included*
Subtotal	**$ 115.00**
Fee @ 5.5%	$ 6.33
Insurance @ .912%	$ 1.11
Total Cost / Hour	**$122.43**

BIM / VDC Engineer	
DESCRIPTION	**$/HR**
*Base Rate	$ 115.00
Burden	*Included*
Computer	*Included*
Software	*Included*
Cell Phone	*Included*
Truck	*Included*
Fuel / Vehicle Service	*Included*
Subtotal	**$ 115.00**
Fee @ 5.5%	$ 6.33
Insurance @ .912%	$ 1.11
Total Cost / Hour	**$122.43**

*Note: The Base rate for Pre-Construction Manager, Sr. Estimator, Sr. MEP Estimator, Estimator, Scheduling Manager, and BIM / VDC Engineer are billable rates and include burden, computer, software, cell phone, along with truck and fuel / vehicle service as applicable.

September 2, 2021

PRE-CONSTRUCTION STAFF BUDGET

Name	Title	Hourly Rate	Estimated Hours	Estimated Cost
Brandon Moon	Project Executive	$156.89	**240**	***Included***
Thomas Assante	Sr. Project Manager	$135.73	**152**	**$20,630**
Jeremy Wattleworth	Superintendent	$120.47	**76**	**$9,156**
Brett Foster	Pre-Construction Manager	$152.24	**312**	**$47,499**
Arturo Aguilar	Sr. Estimator	$122.43	**296**	**$36,240**
TBD	Sr. MEP Estimator	$122.43	**188**	**$23,017**
TBD	Estimator	$92.62	**260**	**$24,082**
Bob Edkins	Scheduling Manager	$122.43	**112**	**$13,712**
TBD	BIM / VDC Engineer	$122.43	**88**	**$10,774**
			1724	**$185,110**

September 2, 2021

PRE-CONSTRUCTION STAFF ESTIMATED ALLOCATION

	DWL - DESIGN	CONCEPT		SCHEMATIC DESIGN						DESIGN DEVELOPMENT								CONSTRUCTION DOCUMENTS													
	MCCARTHY - ESTIMATE	CONCEPT EST.		CONT. COST MODELING				SCHEMATIC ESTIMATE			CONTINUOUS COST MODELING						GMP DEVELOPMENT & SUBCONTRACTING					GMP RECONCILIATION								
		2021																2022													
Name	**Title**	September 2021				October 2021					November 2021				December 2021				January 2022					February 2022				March 2022			
		9/5	9/12	9/19	9/26	10/3	10/10	10/17	10/24	10/31	11/7	11/14	11/21	11/28	12/5	12/12	12/19	12/26	1/2	1/9	1/16	1/23	1/30	2/6	2/13	2/20	2/27	3/6	3/13	3/20	3/27
Brandon Moon	Project Executive	8	8	8	8	8	8	8	8	8	8	8	8	8	8	8	8	8	8	8	8	8	8	8	8	8	8	8	8	8	8
Thomas Assante	Sr. Project Manager	4	4	4	4	4	4	4	4	4	4	4	4	4	4	4	4	4	4	4	4	4	4	8	8	8	8	8	8	8	8
Jeremy Wattleworth	Superintendent	2	2	2	2	2	2	2	2	2	2	2	2	2	2	2	2	2	2	2	2	2	2	4	4	4	4	4	4	4	4
Brett Foster	Pre-Construction Manager	20	20	8	8	8	8	12	12	12	12	8	8	8	8	8	16	16	16	16	16	16	8	8	8	8	8	4	4	4	4
Arturo Aguilar	Sr. Estimator	20	20	4	4	4	4	12	12	12	12	8	8	8	8	8	16	16	16	16	16	16	8	8	8	8	8	4	4	4	4
TBD	Sr. MEP Estimator	16	16					12	12	12	12						12	12	12	12	12	12	4	4	4	4	4	4	4	4	4
TBD	Estimator	16	16					12	12	12	12						24	24	24	24	24	24	4	4	4	4	4	4	4	4	4
Bob Edkins	Scheduling Manager	8	8						8	8			8	8			8	8				8	8			8	8			8	8
TBD	BIM / VDC Engineer	4	4	4	4	4	4	4	4	4	4	4	4	4	4	4	4	4	4	4	4	4	4								
		98	98	30	30	30	30	66	74	74	66	34	42	42	34	34	94	94	86	86	86	94	50	44	44	52	52	36	36	44	44
		HOURS PER WEEK																													

September 2, 2021

McCARTHY

REIMBURSIBLE EQUIPMENT, MATERIAL, AND TASKS

OFFICE EQUIPMENT AND SUPPLIES				
Description	**Units**	**UOM**	**Cost / Unit**	**Extended Cost**
Printer, Ink, Paper and Copier Charges	5	MO	$200	$1,000
Office Supplies	5	MO	$100	$500
Misc. Supplies	5	MO	$300	$1,500
Construction Documents - 4 Sets (Article 3.6.6)	4	EA	$750	$3,000
GMP Package (Binder, Tabs, Paper, Etc.)	1	EA	$750	$750
Courier Service	5	MO	$50	$250
			SUBTOTAL	**$7,000**

CONSULTANT / SUBCONTRACTOR (ALLOWANCES)				
Description	**Units**	**UOM**	**Cost / Unit**	**Extended Cost**
DBE Consultant - Kuniklo	1	EA	$7,500	$7,500
Subcontractor / Supplier - Early Procurement	1	EA	$10,000	$10,000
Modular Hold Room - Early Procurement	1	EA	$10,000	$10,000
			SUBTOTAL	**$27,500**

UTILITY MAPPING / SITE INVESTIGATION (ALLOWANCES)				
Description	**Units**	**UOM**	**Cost / Unit**	**Extended Cost**
McCarthy Mapping - Underground Utility Location	**1**	**EA**	$5,000	$5,000
Site Investigation / Potholing	1	EA	$25,000	$25,000
			SUBTOTAL	**$30,000**

TASK DEFINITIONS:

DBE Consultant – Kuniklo: Kuniklo will help the team to analyze the project scope and develop a project specific DBE procurement strategy, establish goals, develop a procurement schedule, and maximize participation and document outreach efforts.

Subcontractor / Supplier – Early Procurement: This task will be used to provide the team a means to onboard key suppliers and trade partners for early procurement of long lead materials and equipment to expedite the evaluation of options and to begin shop drawings, submittals, or other deliverables early, allowing for on time procurement.

Modular Hold Room – Early Procurement: This task will be used to provide the team a means to onboard a partner to assist in the early procurement of the temporary hold room by providing early shop drawings, submittals, or other deliverables to ensure on-time procurement.

McCarthy Mapping – Underground Utility Location: This task will be used to identify and locate underground utilities and services to assist the design team in validation of existing as built documents.

Site Investigation / Potholing: This task will be used to investigate and pothole to locate the exact location of existing underground utilities and services. This task will also include documentation of location through use of a licensed land surveyor for distribution to the design team for incorporation into the final design documents.

EXHIBIT B – SUBMITTAL REQUIREMENTS FOR GMP PROPOSAL

NOTE: Attached is Sample CMAR GMP Summary (spreadsheet CMAR to use for calculations.)

1. Unless otherwise instructed, CMAR shall submit three (3) bound copies of any GMP Proposal(s) that includes the following documents, complies with the requirements specified in this Contract and the following instructions. The GMP Proposal(s) shall be organized as follows:

   A. Table of Contents
   B. Project Description
   C. GMP Proposal and the following attachments:
      1) Detailed Cost Estimate upon which the GMP is based, and if for phased work, a total project Detailed Cost Estimate as of the time of the phased GMP Proposal.
      2) List of Subcontractors
      3) Schedule of Manufacturers and suppliers
   D. Schedule of Values("SOV")
   E. Cash Flow Projections
   F. Project Schedule and a variance report to the Baseline Project Schedule
   G. Construction phasing/traffic control (if applicable)
   H. List of GMP Plans and Specifications

2. A summary breakdown of the GMP Proposal is shown on page 2 of this Exhibit, along with instructions regarding certain line items. The definitions included in Section 1of the General Conditions apply to the line items, as appropriate, and set-forth the criteria to be used by CMAR in providing the requested breakdown.

3. The most current version of CMAR's SOV shall be submitted with the GMP Proposal. Supporting documents for the SOV, including the request for bids, copies of bids received and clarification assumptions used for the particular bid item listed must be provided in an organized manner that correlates with the SOV.

4. The final accepted GMP shall not include any clarifications/assumptions made by CMAR in the preparation of the GMP Proposal, unless any such clarification or assumption is agreed to in writing by PMGAA.

5. The most current version of CMAR's Detailed Project Schedule shall be submitted with the GMP Proposal with a variance report from the project's Baseline Schedule. The Detailed Project Schedule shall be prepared as specified in this Contract.

6. A table listing all drawing sheets included in the GMP Plans and Specification shall be included with the GMP package. The table shall include the following information: Sheet Number, Sheet Name, Sheet Version, and Date of Issuance. The GMP Proposal and Specifications, as defined, shall be transmitted as specified in this Contract.

NOTE: The submittal package must be kept as simple as possible all on 8½x11 sheets unless otherwise approved by PMGAA. Color or shading must be kept to a minimum. If used, make sure the color or shading will not affect the reproduction of the submittal in black and white.

September 2, 2021

SAMPLE GMP SPREADSHEET

GMP SUMMARY				
Project:	***Sample Project Name***			
	Sample Project #			
Location:	***Mesa, AZ***			
Date:	***Thursday, September 2, 2021***			
WC No.	**Description**		**Total**	**Subcontractor**
01A	General Conditions		$5,120,657.83	McCarthy
01B	General Requirements & Move Management		$735,504.00	McCarthy / Various
01D	Survey		$22,107.54	Engineering Alliance (SBE)
02A	Selective Demolition		$280,364.00	Dickens Demolition
04A	Masonry & Structural Requirements		$140,095.40	Stone Cold Masonry
06B	Millwork		$173,910.12	Request Manufacturing (SBE)
07C	Insulation		$22,253.30	Gale
08A	Doors, Frames & Hardware		$268,705.65	American Direct
08B	Overhead Doors		$25,385.21	Miner Southwest
08D	Glass & Glazing		$113,569.39	Kovach
09A	Metal Studs, Drywall & EIFS		$545,586.85	E&K
09C	Tile		$80,755.28	Toponyx (SBE)
09D	Acoustical Treatments		$169,108.00	TP Acoustics (SBE Participation)
09E	Carpet & Resilient Flooring		$250,174.55	Wholesale Floors
09J	Painting & Coatings		$102,206.95	E&K
10A	Signage		$45,944.00	Smithcraft
10B	Specialties		$196,018.67	Various (see detail)
11D	Baggage Handling Systems		$35,470,128.98	G&S Conveyor (SBE Participation)
12C	Furniture		$114,544.94	Dave Scott & Associates, Inc (SBE)
21A	Fire Suppression		$162,284.98	AZ Verde (SBE)
22A	Plumbing		$275,968.35	Karber Corporation (SBE)
23A	Heating, Ventilation & Air Conditioning (HVAC)		$979,730.54	Karber Corporation (SBE)
26A	Electrical & Special Systems		$4,766,071.71	DP Electric (SBE Participation)
31A	Earthwork, Paving & Utilities		$3,467,884.58	Rhino Contracting (SBE)
	TOTAL DIRECT COST		**$53,568,961.02**	
	Contractor fee	5.50%	$2,946,292.86	
	Contractor's Insurance	0.912%	$564,636.67	
	Builder's Risk Insurance	0.29%	$176,364.70	
	Performance & Payment Bond	0.75%	$456,115.60	
	Sales Tax - GRT (65% of 8.3%)	5.395%	$3,113,042.90	
	TOTAL GMP COST		**$60,815,413.65**	

EXHIBIT C – PMGAA PUBLISHED RULES AND REGULATIONS AND MINIMUM STANDARDS

CMAR agrees to comply with Phoenix-Mesa Gateway Airport Authority's published Rules and Regulations and Minimum Standards as amended from time to time.

1. Rules & Regulations (link)

   http://www.gatewayairport.com/documents/documentlibrary/board%20policies/rules%20and%20regulations_16-53.pdf?Uniqueifier=8gC0UBcOyg

2. Minimum Standards (link)

   http://www.gatewayairport.com/documents/documentlibrary/board%20policies/airport%20minimum%20standards.pdf?Uniqueifier=8gC0UBcOyg

Phoenix-Mesa Gateway Airport Authority
5835 S Sossaman Road
Mesa, Arizona 85212-6014
www.gatewayairport.com

Board Action Item

Re: Resolution 21-41

To:	**Board of Directors**
From:	**R. J. Draper, P.E., LEED AP, CM, Engineering & Facilities Director**
Through:	**Scott Brownlee, Deputy Director/COO** **J. Brian O'Neill, A.A.E., Executive Director/CEO**
Subject:	**Archaeology Data Recovery Mitigation in the Locus 2 Archeological Site – SWCA Environmental Consultants (SWCA)**
Date:	**September 21, 2021**

Proposed Motion

To authorize a contract with SWCA for Archaeology Data Recovery Mitigation of the Locus 2 Archeological Site on the Eastside of the Airport, in an amount not to exceed $142,506 under CIP 1234.

Narrative

Future development of the Gateway Airport Eastside area requires Archeology Data Recovery Mitigation of the Locus 2 Archeological Site. In order to support long-term viability of the airport, by providing a sustainable revenue source from this parcel of undeveloped land, the Airport Authority needs to conduct Archaeological Data Recovery as identified through test excavations that were conducted by Dames and Moore in 1997. This mitigation needs to be conducted prior to future development in this area; therefore, PMGAA is proposing to have SWCA complete the required Data Recovery Mitigation in the Locus 2 Archaeological Site.

This project will consist of SWCA creating a plan of work that is submitted and approved by both the State Historic Preservation Office (SHPO) and the Arizona State Museum (ASM). Field work will consist of mechanical and manual excavation; exposing known pit houses, middens and anomalous features that were identified previously; analysis of artifacts and of select samples from the data recovery excavations. After fieldwork is complete, SWCA will prepare a summary letter report that describes the findings and will make recommendations for construction to proceed.

SWCA Environmental Consultants was chosen to do this important Data Recovery Mitigation due to their intimate knowledge of the Phoenix-Mesa Gateway Airport. SWCA has completed the Historical Properties Report for the US Air Force, Arizona State Historic Preservation Office, the Advisory Council on Historic Preservation, and other signatories of the Programmatic Agreement since 2007. Due to SWCA's extensive history working on projects here at PMGAA, their professional firm experience in archaeological research, surveying, testing, monitoring, and data recovery programs, PMGAA staff feels that SWCA is the most qualified firm to complete this project. See Management Information Report (MIR) regarding procurement included in this month's Board packet.

Fiscal Impact

This Data Recovery Project is a new project being funded by the FY22 Capital Contingency Non-Grant funding under CIP 1234.

Attachment(s)

PSA

RESOLUTION NO. 21-41

WHEREAS, the Phoenix-Mesa Gateway Airport Authority ("Authority"), a joint powers airport authority formed pursuant to Arizona Revised Statute §28-8521 *et seq.* owns and operates the Phoenix-Mesa Gateway Airport ("Airport"); and

WHEREAS the Authority desires to authorize a contract with SWCA for Archaeology Data Recovery Mitigation of the Locus 2 Archeological Site on the Eastside of the Airport, in an amount not to exceed $142,506 under CIP 1234.

NOW, THEREFORE, BE IT RESOLVED by the Board of Directors of the Authority as follows:

> **The Board of Directors of the Authority hereby authorize a contract with SWCA for Archaeology Data Recovery Mitigation of the Locus 2 Archeological Site on the Eastside of the Airport, in an amount not to exceed $142,506 under CIP 1234. This resolution also authorizes the Chair or Executive Director/CEO to make such additions, deletions, and changes as may be approved by the Chair or Executive Director/CEO, necessary to carry out the purposes and intent of this Resolution.**

Passed and adopted by the Authority this 21st day of September, 2021.

John Giles, Chair

ATTEST:

Misty Johnson, Clerk of the Board

APPROVED AS TO FORM:

Jill Casson Owen, Attorney

PHOENIX-MESA GATEWAY AIRPORT AUTHORITY

AND

SWCA INCORPORATED,

dba SWCA ENVIRONMENTAL CONSULTANTS

FOR

DATA RECOVERY

CONTRACT NUMBER 20220045

CIP NUMBER 1234

The Phoenix-Mesa Gateway Airport is owned and operated by the Phoenix-Mesa Gateway Airport Authority (PMGAA), a joint powers airport authority authorized by the State of Arizona and consisting of the City of Mesa, City of Phoenix, City of Apache Junction, Town of Gilbert, Town of Queen Creek and the Gila River Indian Community.

Table of Contents

Section I - Consultant Services	3
Section II - PMGAA Responsibilities	3
Section III - Period of Service	3
Section IV – Key Personnel	4
Section V – Payments to the Consultant	4
Section VI – Alteration in Scope of Services	4
Section VII – Work Assignment Completion	4
Section VIII – Ownership of Documents	4
Section IX – Compliance with Laws	4
Section X – General Considerations	5
Section XI – No Kick-back Certification	5
Section XII – Suspension of Services	5
Section XIII – Times of Payments	5
Section XIV – Timely Review	5
Section XV – Dispute Resolution	5
Section XVI – Liability of Consultant	5
Section XVII – Laws and Regulations	6
Section XVIII – Archaeological Resource Protection	6
Section XIX – Insurance Requirements	6
Section XX – Notices	7
EXHIBIT A – Scope of Services & Fee Schedule	9
EXHIBIT B – Compensation	15
EXHIBIT C – Special Provisions	16
EXHIBIT D – PMGAA Standard Terms and Conditions	

Phoenix-Mesa Gateway Airport Authority, a joint powers airport authority authorized by the State of Arizona ("PMGAA") desires performance of the services more fully described in this **Contract Number 20220045** ("Contract") and the attached exhibits. SWCA Incorporated, dba SWCA Environmental Consultants, an Arizona Corporation ("Consultant"), with its principal offices located at 20 E. Thomas Road, Suite 1700, Phoenix, Arizona, 85012, desires to perform these services.

Recitals

A. PMGAA requires the services as described in this Contract, including any and all exhibits and amendments, and Consultant is willing to provide these and other services under this Contract; and

B. PMGAA desires to contract with Consultant to provide services as noted herein.

Now therefore, in consideration of the recitals and the mutual covenants set forth below, PMGAA and Consultant agree as follows.

SECTION I – CONSULTANT SERVICES

The services to be performed by Consultant are specified in this Contract. PMGAA will not pay Consultant for any services that have not been authorized under the Contract. There is no guarantee of a minimum purchase of services.

The anticipated services to be provided by Consultant under this Contract shall generally include, but not be limited to, the following: Data Recovery, as more specifically described in the detailed scope of services attached as **EXHIBIT A**, "Scope of Services & Fee Schedule."

PMGAA's authorized representative shall be the PMGAA Engineering and Facilities Director, or his/her duly authorized representative, and that he/she shall be the sole contact for administering this Contract.

All services provided by Consultant under this Contract must be performed in a manner consistent with that degree of care and skill ordinarily exercised by members of the same profession currently practicing under similar circumstances in Arizona. Consultant makes no other warranty, expressed or implied.

SECTION II – PMGAA RESPONSIBILITIES

PMGAA shall furnish Consultant, at no cost to Consultant, the following information or services for this Contract:

A. Access to copies of readily available maps, records, as-built drawings, benchmarks or other data pertinent to work assignments affiliated with this Contract. This does not, however, relieve Consultant of the responsibility of searching records for additional information, for requesting specific information or for verification of that information provided. PMGAA does not warrant the accuracy or comprehensiveness of any information or documents provided to Consultant.

B. In PMGAA's discretion and upon Consultant's reasonable request, access to staff for consultation with Consultant during the performance of this contract in order to identify the problems, needs, and other functional aspects of the work.

C. Prompt review of and feedback on Consultant's deliverables. PMGAA will advise Consultant concerning progress of PMGAA's review of the work, as needed.

SECTION III - PERIOD OF SERVICE

Consultant shall complete all work in accordance with the provisions of this Contract as amended.

All work initiated under this Contract must be completed on or before the expiration date of the Contract as amended.

The term of this Contract shall commence on September 22, 2021 and ends upon final completion and acceptance by PMGAA of the project, as defined by the Scope of Services ("Base Term"), unless terminated, canceled or extended as provided in this Contract.

Consultant shall commence its services within seven (7) days of the written authorization by PMGAA. Consultant shall perform its services in a diligent manner and in accordance with this Contract.

SECTION IV – KEY PERSONNEL

The Consultant itself shall provide all services to be performed under this Contract. If Sub-Consultants are required by Consultant to perform any services listed under this contract, Consultant shall notify PMGAA prior to authorizing work by said Sub-Consultants. PMGAA may, at its sole discretion, accept or reject proposed Sub-Consultants.

SECTION V - PAYMENTS TO THE CONSULTANT

Consultant will be paid for work performed under this Contract plus any adjustments that have been approved in writing by PMGAA in accordance with PMGAA's Procurement Policy. Payments will be made in accordance with **EXHIBIT B**, "Compensation."

All services to be rendered by Consultant are subject to the terms of **EXHIBIT B**, "Compensation" attached hereto.

PMGAA does not guarantee any minimum or maximum fee during the Term of this Contract, and Consultant, in executing this Contract, shall not anticipate or require any minimum or maximum fee.

PMGAA shall pay Consultant in agreed upon installments for services authorized and rendered under this Contract at the completion of each work assignment, provided Consultant has satisfactorily completed the requested work. If any such work requires time in excess of 30 calendar days to complete, progress payment(s) may be made on invoices certified and approved by PMGAA.

SECTION VI - ALTERATION IN SCOPE OF SERVICES

For any alteration in the Scope of Services that would materially increase or decrease the Contract fee, the parties shall negotiate an amendment to the Contract to be executed by PMGAA and Consultant. No work shall commence on any amendment or change until the amendment has been approved by PMGAA and Consultant has been notified to proceed by PMGAA. No claim for extra work done or materials furnished by Consultant will be allowed by PMGAA, except as provided herein, nor shall Consultant do any work or furnish any materials not covered by this Contract unless the work is first authorized in writing by PMGAA and the change complies with PMGAA's Procurement Policy. Any work or materials furnished by Consultant without advance, written authorization will be at Consultant's own risk, cost, and expense. Without written authorization, Consultant shall make no claim for compensation for such work or materials furnished.

SECTION VII - WORK ASSIGNMENT COMPLETION

If, during the Term of this Contract, situations arise which prevent work completion within the allotted time, PMGAA may grant an appropriate time extension.

SECTION VIII - OWNERSHIP OF DOCUMENTS

Any documents, including all electronic copies thereof, prepared under or as a result of this Contract, shall be the property of PMGAA. To the extent necessary to effectuate such ownership, Consultant hereby assigns all right, title and interests to such documents to PMGAA. Consultant shall execute any separate contracts or documents, if any, which may be necessary to implement the terms of this Section.

All of Consultant's documents prepared under this Contract, including electronic files, are instruments of service. All of these documents become the property of PMGAA upon completion of the services and payment in full to Consultant. PMGAA may reuse or modify the documents, as it deems necessary, without Consultant's prior written authorization. PMGAA shall indemnify and hold harmless Consultant, its officers, directors, employees and subconsultants (collectively, the "Consultant") against any and all damages, liabilities or costs arising from PMGAA's modification of documents produced by Consultant under this Contract unless Consultant authorizes the modification in writing.

SECTION IX - COMPLIANCE WITH LAWS

Consultant shall comply with all federal, state and local laws, local ordinances and regulations throughout the Term.

Consultant's signature on this Contract certifies compliance with the provisions of the I-9 requirements of the *Immigration Reform and Control Act of 1986* for all personnel that Consultant and any subconsultants employ to complete any work assignment.

PMGAA shall administer this Contract in accordance with PMGAA's Procurement Policy.

SECTION X - GENERAL CONSIDERATIONS

A. The failure of either party to enforce any of the provisions of this Contract or require performance of the other party of any of the provisions hereof shall not be construed to be a waiver of the provisions, nor shall it affect the validity of this Contract or the right of either party to enforce each and every provision.

B. The fact that PMGAA has accepted or approved Consultant's work shall in no way relieve Consultant of responsibility for the work under this Contract.

C. This Contract shall be governed by the laws of the state of Arizona, both as to interpretation and performance. Any action at law, suit in equity, or judicial proceeding for the enforcement of this Contract, or any provision thereof, shall be instituted only in the courts of the state of Arizona.

D. All exhibits to this Contract and any amendments to the Contract are incorporated into it.

SECTION XI - NO KICK-BACK CERTIFICATION

Consultant warrants that no person has been employed or retained to solicit or secure this Contract upon any agreement or understanding for a commission, percentage, brokerage, or contingent fee and that no member of the PMGAA Board of Directors or any employee of PMGAA has any interest, financially or otherwise, in Consultant's firm.

For breach or violation of this warranty, PMGAA may annul this Contract without liability.

SECTION XII – SUSPENSION OF SERVICES

Consultant shall, within five (5) business days upon receiving written notice from PMGAA, suspend, delay, or interrupt all or a part of the Scope of Services. Consultant shall resume the Scope of Services within five (5) business days of receiving written notice from PMGAA.

SECTION XIII – TIMES OF PAYMENTS

Consultant shall submit monthly invoices for services actually completed. PMGAA shall review, certify, and approve or reject each invoice in whole or in part. PMGAA shall pay each approved invoice within 30 calendar days of the date that PMGAA approves the invoice.

SECTION XIV – TIMELY REVIEW

PMGAA will review Consultant's studies, reports, proposals, and other related documents and render any decisions required by Consultant in a timely manner. Notwithstanding these reviews, Consultant remains solely responsible for all of its deliverables and services under this Contract. By PMGAA's reviews, PMGAA does not assume any liability for or retained control over Consultant's work or Consultant's responsibility for the safety of its employees.

SECTION XV – DISPUTE RESOLUTION

All disputes between PMGAA and Consultant arising out of or relating to this Contract will be subject to the Dispute Resolution provisions as set forth in **EXHIBIT D**, "PMGAA Standard Terms and Conditions", attached hereto and incorporated herein by reference.

PMGAA and Consultant shall include a similar dispute resolution provision in all contracts with other contractors and consultants retained for the Project and shall require all other independent contractors and consultants to include a similar dispute resolution provision in all contracts with subcontractors, subconsultants, suppliers or fabricators retained by them.

SECTION XVI - LIABILITY OF CONSULTANT

To the fullest extent permitted by law, Consultant shall defend, save, indemnify, and hold harmless PMGAA, its member governments, departments, officers, employees, and agents from and against damages arising out of any act, error, or omission of Consultant relating to its services under this Contract.

SECTION XVII - LAWS AND REGULATIONS

All federal, state, and local laws and regulations that relate to Consultant's services apply to Consultant's performance of this Contract throughout. These laws and regulations are deemed included in this Contract the same as though written out in full, especially the current applicable Federal Aviation Administration (FAA) rules and regulations associated with airport projects; pertinent Airport engineering standards; and local rules, regulations, and industry standards.

SECTION XVIII – ARCHAEOLOGICAL RESOURCE PROTECTION

While performing services under this Contract, Consultant may encounter a known or unknown archaeological site located at the Airport. If Consultant encounters what it believes to be an archaeological site, Consultant shall immediately notify PMGAA of the site's location and take all reasonable precautions to protect and preserve the site until PMGAA otherwise directs.

SECTION XIX INSURANCE REQUIREMENTS

A. Consultant shall procure and maintain for the duration of the contract insurance against claims for injuries to persons or damages to property which may arise from or in connection with the performance of the work hereunder by the Consultant, its agents, representatives, or employees.

B. All insurance policies required by this Contact, except *Workers Compensation* and *Professional Liability*, shall name PMGAA, its agents, representatives, officers, directors, officials and employees as Additional Insured.

C. Minimum Scope and Limits of Insurance. Coverage shall be at least as broad as:

   i. Professional Liability (Errors and Omissions): Insurance appropriate to the Consultant's profession, with limit no less than $1,000,000 per occurrence or claim, $2,000,000 aggregate.
   ii. Commercial General Liability: Insurance Services Office Form CG 00 01 covering Bodily Injury and Property Damage on an "occurrence" basis, including personal & advertising injury with limits no less than $1,000,000 per occurrence, $2,000,000 General Aggregate.
   iii. Auto Liability: ISO Form CA 00 01 covering any auto (Symbol 1), or if Consultant has no owned autos, hired, (Symbol 8) and non-owned autos (Symbol 9), with limit no less than $1,000,000 Combined Single limit per accident for bodily injury and property damage ($5,000,000 if operating in the Air Operations Area of the Airport).
   iv. Workers' Compensation: Statutory Limits as required by the state of Arizona, and Employer's Liability Insurance with limit of no less than $1,000,000 per accident for bodily injury or disease.

D. If the Consultant maintains higher limits than the minimums shown above, PMGAA requires and shall be entitled to coverage for the higher limits maintained by the Consultant. Any available insurance proceeds in excess of the specified minimum limits of insurance and coverage shall be available to PMGAA.

E. Additional insurance provisions. The insurance policies shall provide, or be endorsed to include, the following provisions:

   i. Notice of Cancellation: Each insurance policy required above shall provide that coverage shall not be canceled, except with notice to PMGAA.
   ii. Waiver of Subrogation: Consultant waives any right to subrogation. Consultant shall obtain an endorsement necessary to affect this waiver of subrogation from the insurer for all lines of coverage required by this Contract, except *Workers Compensation* and *Professional Liability,* for claims arising out of the Consultant's work or service.
   iii. Primary Coverage: For all claims related to this Contract, all of Consultant's insurance policies will be primary and non-contributory. Any insurance or self-insurance maintained by PMGAA, its officers, officials, employees, or volunteers will be in excess of Consultant's insurance and will not contribute with it.
   iv. Deductibles and Self-Insured Retentions: Any deductibles or self-insured retentions must be declared to and approved by PMGAA. PMGAA may require the Consultant to provide proof of

ability to pay losses and related investigations, claim administration, and defense expenses within the retention.

v. Acceptability of Insurers: Insurance is to be placed with insurers with a current A.M. Best's rating of no less than A, VII, unless otherwise acceptable to PMGAA.

vi. Claims Made Policies: No Claims Made policies (other than Professional Liability) will be accepted. For policies that provide claims-made coverage:

a) The Retroactive Date must be shown and must be before the date of the contract or the beginning of contract work.

b) Insurance must be maintained, and evidence of insurance must be provided for at least five (5) years after completion of the contract of work.

c) If coverage is canceled or non-renewed, and not replaced with another claims-made policy form with a Retroactive Date prior to the contract effective date, the Consultant must purchase "extended reporting" coverage for a minimum of five (5) years after completion of work.

vii. Verification of Coverage: Consultant shall furnish PMGAA with original certificates and amendatory endorsements or copies of the applicable policy language effecting coverage required by this clause. All certificates and endorsements are to be received and approved by PMGAA before work commences. However, failure to obtain the required documents prior to the work beginning shall not waive the Consultant's obligation to provide the required insurance. PMGAA reserves the right to require complete, certified copies of all required insurance policies, including endorsements required by these specifications, at any time.

viii. Subcontractors: Consultant shall require and verify that all subcontractors maintain insurance meeting all the requirements stated herein, and Consultant shall ensure that PMGAA is an additional insured on insurance required from subcontractors.

ix. Special Risks or Circumstances: PMGAA reserves the right to modify these requirements, including limits, based on the nature of the risk, scope of services, prior experience, insurer, coverage, or other special circumstances.

SECTION XX NOTICES

Any notice, report or information which may be or is required to be given under this Contract will be in writing and shall be sent by registered or certified mail, return receipt requested, postage prepaid, addressed as follows:

TO PMGAA: Phoenix-Mesa Gateway Airport Authority
Attn: Engineering and Facilities Director
5835 South Sossaman Road
Mesa, Arizona 85212

TO CONSULTANT: SWCA Environmental Consultants
Attn: Jerome Hesse
343 West Franklin Street
Tucson, Arizona, 85701

or to such other person(s) or address(es) as any such Party may designate from time to time by notice to the other Parties in accordance with this Section.

Executed as of the Commencement Date.

CONSULTANT
SWCA Incorporated, dba SWCA Environmental Consultants, an Arizona Corporation

By: _____

Name: Jana Sterling

Title: Vice President - Southwest

Date: 8/19/21

PMGAA
PHOENIX MESA GATEWAY AIRPORT AUTHORITY, a joint powers airport authority authorized by the state of Arizona

By: _____

Name: J. Brian O'Neill, A.A.E.

Title: Executive Director/CEO

Date: _____

EXHIBIT A – SCOPE OF SERVICES & FEE SCHEDULE

The services to be performed by Consultant and the completion of related efforts are specified in the following Scope of Services & Fee Schedule agreed to by the parties.

For the services provided herein, PMGAA agrees to pay Consultant the not to exceed amount of $142,506.00 for Locus 2 per the attached scope.

SCOPE OF WORK

Proposal for Archaeological Data Recovery within Loci 2 and 3 of AZ U:10:69(ASM) at Phoenix-Mesa Gateway Airport, Mesa, Maricopa County, Arizona

PROJECT UNDERSTANDING

Phoenix-Mesa Gateway Airport Authority (PMGAA) is proposing development at Phoenix-Mesa Gateway Airport (Airport) that would affect Locus 2 and Locus 3 of archaeological site AZ U:10:69(ASM), two areas that were determined through test excavations conducted by Dames and Moore in 1997 to require data recovery mitigation prior to future development. The 1997 test excavations within Locus 2 identified three possible pit houses, four middens, a ceramic pottery concentration, and an amorphous, disturbed feature of undetermined function. No buried features were found in Locus 3 as a result of the test excavations. Additional data recovery investigations were not conducted at Loci 2 and 3 in 1997 because these areas were outside the area to be affected by then-proposed runway improvements. As a result, Dames and Moore recommended data recovery of Loci 2 and 3 prior to the future development of these areas.

TASK 1. DATA RECOVERY WITHIN ONLY LOCUS 2 OF AZ U:10:69(ASM)

The data recovery scope of work consists of multiple project phases: Plan of Work and Permitting, Fieldwork, Analysis and Reporting, and Curation.

Plan of Work and Permitting

SWCA Environmental Consultants (SWCA) will prepare a plan of work specific to the data recovery project area. The plan of work will require review and approval by the State Historic Preservation Office (SHPO) and the Arizona State Museum (ASM). It will also need to be distributed to Native American tribes and other participating agencies (e.g., Federal Aviation Administration, if applicable). The existing Historic Properties Treatment Plan prepared for the decommissioning of Williams Air Force Base will provide the research framework for the data recovery plan of work.

Archaeological investigations on the Airport require an Arizona Antiquities Act (AAA) permit, which is issued by the ASM. Upon completion of the plan of work, SWCA will submit it and an application for an AAA project-specific permit to the ASM. The ASM has a 30-day review period for AAA permit applications. SWCA will also request from the ASM a repository agreement and a human remains burial agreement. The ASM will not issue an AAA permit without a repository agreement in place.

SWCA will coordinate with PGMAA to develop a plan to ensure that Airport safety and security measures are followed during fieldwork. SWCA will arrange for backhoe and water truck services and will coordinate with PMGAA to have the excavation areas marked for buried utilities. SWCA will assemble the other necessary materials for the work.

Fieldwork

SWCA's proposed field effort will use mechanical excavation where practical. In tandem with the mechanical excavation, a crew of archaeologists will complete detailed manual excavation and recording of a sample of identified features. SWCA will map the location of archaeological features using a total station or handheld GPS units with sub-meter accuracy.

For Locus 2, we propose a 3-week-long program of field investigations. Mechanical excavation will begin by uncovering/stripping the ground surface to expose the pit houses, middens, and the anomalous feature that were identified during the testing phase. Stripping will extend 5 to 10 m beyond the boundaries of these features to determine whether associated features are present; however, a total stripped area of no more than 1,000 m^2 is included in this scope. In addition, 100 m of backhoe trench will be excavated in the northern portion of Locus 2, which was outside the area tested by Dames and Moore in 1997.

Manual excavation will focus on any identified pit houses, which, if confirmed to be pit houses, will be 100 percent excavated. The middens will be sampled through the excavation of one 1 × 2–m unit within each midden. Although no pits (e.g., cooking pits, storage pits, etc.) were found during testing, SWCA will excavate up to five pit features. No human remains were found in Locus 2 during the testing phase, so no human remains are anticipated to require treatment.

After the fieldwork is complete, SWCA will prepare a summary letter report that briefly describes the findings of the fieldwork and any deviations to the plan of work and makes recommendations for construction to proceed. PMGAA will submit the letter report to SHPO for approval.

Analysis and Reporting

SWCA will complete analysis of artifacts and select samples from the data recovery excavations. This will include analysis of any artifacts recovered through excavation, four macrobotanical samples and four pollen samples to be collected from pits and/or pit houses, and two radiocarbon dates. Analysis may be completed by SWCA staff or outsourced to specialists. Radiocarbon samples will be processed by Beta Analytic, an industry vendor.

A report of results will be prepared. The report will discuss the results of the data recovery, including a summary of artifact and feature analysis, and how the analysis applies to the project research design. It will conform to current AAA and SHPO reporting standards.

Curation

The final report, artifacts and samples, digital photographs, and any other applicable project materials will be prepared for curation at the ASM. If encountered, human remains and funerary items will be repatriated to the claimant tribes. If human remains are identified, a Report of Remains will be submitted to the ASM's Repatriation Office and claimant tribes.

ASSUMPTIONS FOR TASK 1

- Any task not expressly described herein is not included in the proposed cost.
- SWCA assumes that the proposed level of effort will be deemed sufficient for approval by the SHPO. If the SHPO requests additional investigation, a change order would be needed to cover the associated costs.
- No human remains were encountered during testing. The cost associated with the treatment of human remains and associated funerary objects is not included in this scope of work.
- The excavation will be backfilled but not compacted to road/building construction standards.
- Water for dust control will be provided by PMGAA.
- The cumulative impact of data recovery will not exceed 1 acre; therefore, no project-specific stormwater pollution prevention plan will be prepared or implemented.
- It is assumed curation fees will include no more than 4 linear inches of paper documents, one ASM site card update, and 10 digital images. Collection of artifacts or samples will be strategically targeted. Eight half-boxes (this is consistent with the ASM fee structure) of artifacts and samples will be submitted for curation.

Not-to-Exceed Cost for Task 1 Only: $142,506

TASK 2. DATA RECOVERY WITHIN ONLY LOCUS 3 OF AZ U:10:69(ASM)

In 1997, archaeologists from Dames and Moore conducted surface collection of artifacts and excavated nine backhoe trenches in Locus 3 of AZ U:10:69(ASM). No buried archaeological features were found; nevertheless, Dames and Moore recommended data recovery within Locus 3 prior to future development. SWCA believes that data recovery within Locus 3 is not needed, given the lack of findings during the testing phase. For Task 2, the scope of work includes the following project phases: SHPO Coordination Regarding the Need for Data Recovery, and, if needed, Plan of Work and Permitting, Fieldwork, Analysis and Reporting, and Curation.

SHPO Coordination Regarding the Need for Data Recovery in Locus 3

SWCA will prepare a letter report describing the previous testing work conducted by Dames and Moore within Locus 3 and the lack of findings, and will recommend no further data recovery for Locus 3. Should the SHPO agree that no further work is needed within Locus 3, the following phases would not be implemented.

Plan of Work and Permitting

SWCA will prepare a plan of work specific to the data recovery project area. The plan of work will require review and approval by the SHPO and the ASM. It will also need to be distributed to Native American tribes and other participating agencies (e.g., Federal Aviation Administration, if applicable). The existing Historic Properties Treatment Plan prepared for the decommissioning of Williams Air Force Base will provide the research framework for the data recovery plan of work.

Archaeological investigations on the Airport require an AAA permit, which is issued by the ASM. Upon completion of the plan of work, SWCA will submit it and an application for an AAA project-specific permit to the ASM. The ASM has a 30-day review period for AAA permit applications. SWCA will also

request from the ASM a repository agreement and a human remains burial agreement. The ASM will not issue an AAA permit without a repository agreement in place.

SWCA will coordinate with PGMAA to develop a plan to ensure Airport safety and security measures are followed during fieldwork. SWCA will arrange for backhoe and water truck services and will coordinate with PMGAA to have the excavation areas marked for buried utilities. SWCA will assemble the other necessary materials for the work.

Fieldwork

SWCA's proposed field effort will use mechanical excavation where practical. In tandem with the mechanical excavation, a crew of archaeologists will complete detailed manual excavation and recording of a sample of identified features. SWCA will map the location of archaeological features using a total station or handheld GPS units with sub-meter accuracy.

For Locus 3, we propose a 5-day-long program of field investigations. Mechanical excavation will begin by stripping up to 200 m^2 to expose in plan view any features that may be present. If warranted, as much as 60 linear m of backhoe trench will be excavated in areas not stripped.

Manual excavation will focus on any identified archaeological feature. Pit houses, if present, will be 100 percent excavated. Middens will be sampled through the excavation of one 1 × 2–m unit within each midden. Pits will be bisected and half-excavated. No human remains were found in Locus 3 during the testing phase, so no human remains are anticipated to require treatment.

After the fieldwork is complete, SWCA will prepare a summary letter report that briefly describes the findings of the fieldwork and any deviations to the plan of work and makes recommendations for construction to proceed. PMGAA will submit the letter report to SHPO for approval.

Analyses and Reporting

SWCA will complete analysis of artifacts and select samples from the data recovery excavations. This will include analysis of any artifacts recovered through excavation, two macrobotanical samples and two pollen samples to be collected from pits and/or pit houses, and one radiocarbon date. Analysis may be completed by SWCA staff or outsourced to specialists. Radiocarbon samples will be processed by Beta Analytic, an industry vendor.

A report of results will be prepared. The report will discuss the results of the data recovery, including a summary of artifact and feature analysis, and how the analysis applies to the project research design. It will conform to current AAA and SHPO reporting standards.

Curation

The final report, artifacts and samples, digital photographs, and any other applicable project materials will be prepared for curation at the ASM. If encountered, human remains and funerary items will be repatriated to the claimant tribes. If human remains are identified, a Report of Remains will be submitted to the ASM's Repatriation Office and claimant tribes.

ASSUMPTIONS FOR TASK 2

- Any task not expressly described herein is not included in the proposed cost.
- If the SHPO decides that data recovery of Locus 3 is necessary, SWCA assumes that the proposed level of effort for data recovery described above will be sufficient for approval by the SHPO. If the SHPO requests additional investigation, a change order would be needed to cover the associated costs.
- This scope of work includes no more than five days of fieldwork within Locus 3, including excavation of any features found during mechanical stripping and trenching.
- No human remains were encountered during testing. The cost associated with the treatment of human remains and associated funerary objects is not included in this scope of work.
- The excavation will be backfilled but not compacted to road/building construction standards.
- Water for dust control will be provided by PMGAA.
- The cumulative impact of data recovery will not exceed 1 acre; therefore, no project-specific stormwater pollution prevention plan will be prepared or implemented.

It is assumed curation fees will include no more than 2 linear inches of paper documents, one ASM site card update, and 6 digital images. Collection of artifacts or samples will be strategically targeted. Four half-boxes (this is consistent with the ASM fee structure) of artifacts and samples will be submitted for curation.

Not-to-Exceed Cost for Task 2 Only: $77,569

TASK 3. DATA RECOVERY WITHIN BOTH LOCUS 2 AND LOCUS 3 OF AZ U:10:69(ASM) [TASKS 1 AND 2 COMBINED]

Tasks 1 and 2 are presented as standalone tasks. Should PMGAA decide to proceed with Tasks 1 and 2 as a single project, SWCA would combine Tasks 1 and 2 to create a single plan of work for both loci, prepare a single data recovery report for both loci, and curation the collections generated from both loci as a single project. The level of effort proposed for fieldwork and analysis would be the same as described in Tasks 1 and 2 above, and the assumptions provided in Tasks 1 and 2 would apply.

Not-to-Exceed Cost for Task 3 (Task 1 and Task 2 Combined): $190,768

EXHIBIT B - COMPENSATION

All compensation for services rendered by Consultant shall be based upon criteria established below. All services must be billed through the Consultant.

1. Fees to be Specified in Contract

Any and all services to be performed under this Contract require approval. All compensation for services shall be identified in writing. The Contract shall describe the scope of services to be performed (by tasks and subtasks, where appropriate), the fees associated with that performance, and any applicable special provisions. Consultant's compensation for services included in this Contract is totaled and set forth in **EXHIBIT A**, "Scope of Services and Fee Schedule".

2. Method of Payment

Subject to the terms of this Contract, PMGAA shall pay Consultant the appropriate rate or fixed price amount for services rendered as described in the Contract only after Consultant has submitted an invoice for services performed and PMGAA has certified and approved each invoice.

For services rendered in accordance with the Contract, Consultant shall submit to PMGAA an invoice depicting tasks performed and/or hours spent for services performed. Invoices must be based on the actual hours and/or expenses incurred for the services completed during the billing period. Consultant's invoices must specify that Consultant has performed the services, and PMGAA must certify and approve each invoice as a condition to payment.

3. Consultant Responsibilities for Compensation

Consultant shall prepare monthly invoices and/or progress reports in accordance with terms specified in the Contract. Progress reports will clearly indicate the progress to date and the amount of compensation due by virtue of that progress. All invoices for payment shall be for work completed unless otherwise agreed to by PMGAA. Invoices/requisitions for payment for services subject to funding by the FAA and/or ADOT shall include the documentation requirements of the FAA and/or ADOT, which are outlined in the *Airport Improvement Program (AIP) Handbook* dated September 30, 2014, or most current version.

4. PMGAA Responsibilities for Compensation

PMGAA agrees to pay Consultant's invoices for payment within 30 calendar days after the invoice is approved. PMGAA may withhold payment on any invoice if it believes that Consultant has not performed the work in a satisfactory manner. If PMGAA withholds payment to Consultant, PMGAA shall promptly notify Consultant and explain the reasons for the decision to withhold payment.

5. Billing Address

All invoices submitted to PMGAA for payment shall be submitted to:

Phoenix-Mesa Gateway Airport Authority
Attn: Engineering and Facilities Director
5835 S. Sossaman Road
Mesa, Arizona 85212

EXHIBIT C - SPECIAL PROVISIONS

1. Civil Rights Act of 1964, Title VI – General

The contractor agrees to comply with pertinent statues, Executive Orders and such rules as are promulgated to ensure that no person shall, on the grounds of race, creed, color or national origin, sex, age or disability be excluded from participating in any activity conducted with or benefiting from Federal assistance.

2. Civil Rights Act of 1964, Title VI – Assurances

During the performance of this Contract, the contractor, for itself, its assignees and successors in interest agrees as follows:

a. Compliance with Regulations – Compliance with Regulations: The contractor (hereinafter includes consultants) will comply with the Title VI List of Pertinent Nondiscrimination Acts And Authorities, as they may be amended from time to time, which are herein incorporated by reference and made a part of this contract.

b. Nondiscrimination – The contractor, with regard to the work performed by it during the contract, will not discriminate on the grounds of race, color, or national origin in the selection and retention of subcontractors, including procurements of materials and leases of equipment. The contractor will not participate directly or indirectly in the discrimination prohibited by the Nondiscrimination Acts and Authorities, including employment practices when the contract covers any activity, project, or program set forth in Appendix B of 49 CFR Part 21.

c. Solicitations for Subcontracts, including Procurements of Materials and Equipment – In all solicitations, either by competitive bidding, or negotiation made by the contractor for work to be performed under a subcontract, including procurements of materials, or leases of equipment, each potential subcontractor or supplier will be notified by the contractor of the contractor's obligations under this contract and the Non-discrimination Acts And Authorities on the grounds of race, color, or national origin.

d. Information and Reports – The contractor will provide all information and reports required by the Acts, the Regulations and directives issued pursuant thereto and will permit access to its books, records, accounts, other sources of information, and its facilities as may be determined by PMGAA or the FAA to be pertinent to ascertain compliance with such Nondiscrimination Acts And Authorities and instructions. Where any information required of a contractor is in the exclusive possession of another who fails or refuses to furnish the information, the contractor will so certify to PMGAA or the FAA as appropriate, and will set forth what efforts it has made to obtain the information.

e. Sanctions for Noncompliance – In the event of a contractor's noncompliance with the Nondiscrimination provisions of this contract, the Recipient will impose such contract sanctions as it or the FAA may determine to be appropriate, including, but not limited to:

i) Withholding of payments to the contractor under the contract until the contractor complies, and/or;
ii) Cancellation, termination, or suspension of the Contract, in whole or in part.

f. Incorporation of Provisions – The contractor will include the provisions of paragraphs one through six of this **EXHIBIT C** in every subcontract, including procurements of materials and leases of equipment, unless exempt by the Acts, the Regulations and directives issued pursuant thereto. The contractor will take action with respect to any subcontract or procurement as PMGAA or the FAA may direct as a means of enforcing such provisions including sanctions for noncompliance. Provided, that if the contractor becomes involved in, or is threatened with litigation by a subcontractor, or supplier because of such direction, the contractor may request PMGAA to enter into any litigation to protect the interests of PMGAA. In addition, the contractor may request the United States to enter into the litigation to protect the interests of the United States.

3. Civil Rights – Title VI List of Pertinent Nondiscrimination Acts and Authorities

During the performance of this contract, the contractor, for itself, its assignees, and successors in interest (hereinafter referred to as the "contractor") agrees to comply with the following non-discrimination statutes and authorities; including but not limited to:

- Title VI of the Civil Rights Act of 1964 (42 U.S.C. § 2000d *et seq*., 78 stat. 252), (prohibits discrimination on the basis of race, color, national origin);
- 49 CFR part 21 (Non-discrimination In Federally-Assisted Programs of The Department of Transportation—Effectuation of Title VI of The Civil Rights Act of 1964);
- The Uniform Relocation Assistance and Real Property Acquisition Policies Act of 1970, (42 U.S.C. § 4601), (prohibits unfair treatment of persons displaced or whose property has been acquired because of Federal or Federal-aid programs and projects);
- Section 504 of the Rehabilitation Act of 1973, (29 U.S.C. § 794 *et seq*.), as amended, (prohibits discrimination on the basis of disability); and 49 CFR part 27;
- The Age Discrimination Act of 1975, as amended, (42 U.S.C. § 6101 *et seq*.), (prohibits discrimination on the basis of age);
- Airport and Airway Improvement Act of 1982, (49 USC § 471, Section 47123), as amended, (prohibits discrimination based on race, creed, color, national origin, or sex);
- The Civil Rights Restoration Act of 1987, (PL 100-209), (Broadened the scope, coverage and applicability of Title VI of the Civil Rights Act of 1964, The Age Discrimination Act of 1975 and Section 504 of the Rehabilitation Act of 1973, by expanding the definition of the terms "programs or activities" to include all of the programs or activities of the Federal-aid recipients, sub-recipients and contractors, whether such programs or activities are Federally funded or not);
- Titles II and III of the Americans with Disabilities Act of 1990, which prohibit discrimination on the basis of disability in the operation of public entities, public and private transportation systems, places of public accommodation, and certain testing entities (42 U.S.C. §§ 12131 – 12189) as implemented by Department of Transportation regulations at 49 CFR parts 37 and 38;
- The FAA's Non-discrimination statute (49 U.S.C. § 47123) (prohibits discrimination on the basis of race, color, national origin, and sex);
- Executive Order 12898, Federal Actions to Address Environmental Justice in Minority Populations and Low-Income Populations, which ensures non-discrimination against minority populations by discouraging programs, policies, and activities with disproportionately high and adverse human health or environmental effects on minority and low-income populations;
- Executive Order 13166, Improving Access to Services for Persons with Limited English Proficiency, and resulting agency guidance, national origin discrimination includes discrimination because of limited English proficiency (LEP). To ensure compliance with Title VI, you must take reasonable steps to ensure that LEP persons have meaningful access to your programs (70 Fed. Reg. at 74087 to 74100);
- Title IX of the Education Amendments of 1972, as amended, which prohibits you from discriminating because of sex in education programs or activities (20 U.S.C. 1681 et seq).

4. <u>Certification Regarding Debarment, Suspension, Ineligibility and Voluntary Exclusion</u>

Consultant, by accepting this Contract, certifies that neither it nor its principals is presently debarred, suspended, proposed for debarment, declared ineligible, or voluntarily excluded from participation in this transaction by any government department or agency.

5. <u>Project Security</u>

As some or all portions of work possible during the Term of this Contract may be located inside the secured area of the Airport, adherence to and familiarity with federal security regulations is essential. For these projects, Consultant shall be responsible for fulfilling the security requirements described herein.

a. <u>Secured Area Access</u> – All Consultant personnel who require unescorted access to the secured area of the Airport, prior to the issuance of an Airport Identification badge, must successfully complete the Security Badge Application and Security Badge Authorization forms.

b. Employee Security Badges – If deemed necessary by PMGAA All Consultant and/or subcontractor personnel performing work functions in accordance with this Contract shall obtain and properly display an Airport security badge. Consultant shall submit a Security Badge Application form to the PMGAA security office for each employee requiring unescorted access, along with the current fee for each badge. Badge fees are identified on the current *Airport Fees, Services and Rental Rates* available via the Airport website at www.gatewayairport.com and are subject to change.

i. All fees must be paid to PMGAA by cash or check.
ii. Airport Security Badge Application forms and instructions are available via the Airport website at www.gatewayairport.com.
iii. An authorized representative of Consultant must also obtain and submit a Security Media Authorization form, which is to be submitted to the PMGAA badging office. The Security Media Authorization form and instructions are available via the Airport website at www.gatewairport.com.
iv. A training class on aviation security must be successfully completed before individuals are issued a badge. Fees for the security badge include attendance for the necessary training classes. Attendance at the security classes and issuance of the security badge may take two hours per person.
v. Additional information, including a "Frequently Asked Questions" is available via the Airport website at www.gatewairport.com or by contacting the PMGAA Badging Office at (480) 988-7522. The Badging Office is located at 5803 S. Sossaman Road, Mesa AZ 85212.
vi. Consultant shall immediately notify the PMGAA Badging Office of any Consultant personnel whose employment status has changed.
vii. Consultant shall retrieve all security badges and keys and return them to the PMGAA Badging Office. A fee, as indicated on the most current *Airport Rates and Charges Schedule*, will be charged for each badge that is damaged, lost or not returned.
viii. The PMGAA Badging Office will require a completed Security Badge Application from each Consultant employee so certified by Consultant as requiring such before a Security Badge is issued.
ix. Under certain circumstances and out of control of PMGAA, security measures may change on short notice. No deviations from any security measure shall be allowed at any time.
x. At all times, aircraft shall have the right-of-way over all vehicle traffic.

c. Fines – Due to both the safety and security precautions necessary at the Airport, any failure of the Consultant to adhere to prescribed Airport requirements/regulations has consequences that may jeopardize the health, welfare and lives of Airport customers and employees, as well as the Consultant's own employees. Therefore, if Consultant is found to be in non-compliance with any security, airfield badging/licensing and airfield safety requirement, a Notice of Violations (NOV) may be issued. A current listing of fines is available by contacting the PMGAA Badging Office.

6. Standard Terms & Conditions

PMGAA's Standard Terms & Conditions (in **EXHIBIT D** attached) include clauses that pertain to both construction and professional services. For such, the term "contractor" is to be considered same as "consultant." If a clause implies construction service then it is waived for a professional services contract. PMGAA reserves the right to make that determination if there is a conflict.

7. Federal and State Guidelines and Regulations

All work performed under this Contract must satisfy FAA and applicable agency standards, and be accomplished in accordance with applicable federal, state and local guidelines and regulations, including FAA Advisory Circulars, NEPA and Arizona environmental statutes.

Consultant shall perform the services as described in approved Contract in accordance with the applicable requirements imposed by PMGAA, ADOT, FAA and any other applicable sponsoring agencies. Consultant and its subconsultants/subcontractors, if any, shall comply with any and all applicable laws, regulations, executive orders, policies, guidelines, and any other requirements for FAA Airport Improvement Program (AIP) projects. Consultant shall provide PMGAA all information, reports, documents, and/or certifications requested by PMGAA for the satisfaction of any grant requirements for the reimbursement of services, including, without limitation, identifying

the specific services provided by Consultant and the billing period(s) during which services were or are to be provided. Nothing herein shall be construed as making the FAA or ADOT a party to this Contract.

8. Right to Contract With Other Firms

PMGAA shall have the right to contract with other firms and/or persons and/or to self-perform additional services, which may be the subject of this Contract. Consultant shall conduct its operations and perform any services authorized under the Contract so as not to interfere with or hinder the progress of completion of the work being performed by PMGAA and/or other firms and/or persons. Consultants working on the same project shall cooperate with each other in the performance, scheduling, and, if applicable, the integration of their respective services.

9. Independent Contractor Status

At all relevant times, Consultant is - and shall remain - an independent contractor with regard to performance of its services. PMGAA retains no control over Consultant, the performance of its work or services, or the safety of its employees. Consultant is not authorized to enter into any contract or commitment, authorize any payment, or accept any document, services, goods or materials for, in the name of, or on behalf of PMGAA.

EXHIBIT D – PMGAA STANDARD TERMS & CONDITIONS

1. **Certification.** Consultant certifies:
   a. The award of this Contract did not involve collusion or other anti-competitive practices.
   b. It shall not discriminate against any employee or applicant for employment in violation of Federal Executive Order 11246, or A.R.S. Section 31-1461, et. seq.
   c. It has not given, offered to give, nor intends to give at any time hereafter, any economic opportunity, future employment, gift, loan, gratuity, special discount, trip, favor, or service to a public servant in connection with this Contract; and Consultant hereby certifies that the individual signing this Contract is an authorized agent for Consultant and has the authority to bind the Consultant to the Contract.

2. **Termination of Contract.**

   a. PMGAA reserves the right to cancel this Contract in whole or in part due to failure of Consultant to carry out any term, promise, or condition of the Contract. At least ten (10) business days before terminating the Contract, PMGAA will issue a written notice of default specifying one of the following reasons. PMGAA shall, at all times during the term of the Contract or any extension term thereto, have the sole authority to determine if the default has been cured to its satisfaction.

      (1) Consultant has provided personnel that do not meet the requirements of the Contract.

      (2) Consultant has failed to perform adequately the stipulations, conditions or services/specifications required in this Contract.

      (3) Consultant has attempted to impose on PMGAA personnel or materials, products, or workmanship of unacceptable quality.

      (4) Consultant has failed to furnish the required service(s) and/or product(s) within the time stipulated in the Contract or associated Authorization of Services.

      (5) Consultant has failed to make progress in the performance of the requirements of the Contract or Authorization of Services, or Consultant fails to give PMGAA adequate assurance the Consultant will perform the Contract in full and on time.

      (6) Each payment obligation of PMGAA created hereby is conditioned on the availability of PMGAA, state, or federal funds appropriated for payment of the obligation. If funds are not available or allocated by PMGAA for continuance of service under this Contract, then PMGAA may terminate the Contract. PMGAA shall promptly notify Consultant regarding the service that may be affected by a shortage of funds. No penalty accrues to PMGAA if this provision is exercised, and PMGAA shall not be liable for any future payments due or for any damages as a result of termination under this paragraph.

   b. This Contract may be terminated at any time by mutual written consent or by PMGAA - with or without cause - provided the terminating party gives fourteen (14) calendar days' advance written notice to the other party. PMGAA may terminate this Contract, in whole or in part, for PMGAA's convenience and with fourteen (14) days' written notice. If this Contract is terminated, then PMGAA is liable only for services rendered and material received, certified, and approved by PMGAA under the Contract before the termination effective date.

3. **Dispute Resolution**.

   a. **Negotiations**. If a dispute arises out of or relates to this Contract or its breach, the parties to this Contract shall endeavor to settle the dispute through direct discussions as a condition precedent to mediation or binding dispute resolution.

   b. **Mediation**. Should the parties to this Contract be unable to resolve their dispute through direct negotiations, the parties to this Contract, upon the written request of either, shall engage in mediation, to be administered privately by a mediator and according to rules mutually agreed upon by the parties to this Contract, or, the absence of such mutual agreement, by a mediator appointed by JAMS and

administered by JAMS in accordance with its then-current mediation rules. The fees and costs of mediation shall be split equally by the parties to this Contract, but subject to reallocation following binding dispute resolution.

c. **Binding Dispute Resolution**. Should the parties to this Contract be unable to resolve their dispute through direct negotiations or mediation, either party may, within the time limitations for bringing claims under Arizona law and this Contract, commence formal dispute resolution proceedings. Both parties to this Contract consent to binding arbitration administered by JAMS according to its then current arbitration rules, provided, however, that (i) in the event both parties agree, the arbitration may be administered privately by an arbitrator and according to rules mutually agreed upon by the parties to this Contract, and (ii) in the event any party seeks relief against the other party or against a non-party which cannot fully be granted in arbitration, by reason of non-joinder or otherwise, the parties to this Contract are excused from this arbitration requirement and the parties to this Contract shall proceed in the state or federal courts of competent jurisdiction and located in Maricopa County, Arizona. In any arbitration or litigation, the prevailing party shall be entitled to an award of its reasonable attorneys' fees and costs as determined by the arbitrator or court as applicable.

4. **Independent Contractor.** At all times, each party acts in its individual capacity not as agent, employee, partner, joint venturer, or associate of the other party. An employee or agent of one party may not be deemed or construed to be the employee or agent of the other party for any purpose whatsoever. Neither Consultant nor any of its employees are entitled to compensation from PMGAA in the form of salaries, paid vacation, or sick days. PMGAA will not provide any insurance to Consultant, including *Workers' Compensation* coverage. PMGAA will not withhold FICA, taxes, or any similar deductions from PMGAA's payments under this Contract.

5. **Affirmative Action.** Consultant shall abide by all the federal and state of Arizona provisions for equal opportunity in the work place.

6. **Human Relations**. Consultant shall abide by all the federal and state of Arizona provisions against discrimination of disadvantaged business enterprises in applicable PMGAA contracts.

7. **Non-Exclusive Contract**. This Contract is for the sole convenience of PMGAA. PMGAA reserves the right in its discretion to obtain the same or similar goods or services from any other source.

8. **Americans with Disabilities Act.** Consultant shall comply with all applicable provisions of the *Americans with Disabilities Act* (Public Law 101-336, 42 U.S.C. 12101-12213) and applicable federal regulations under the *Act*.

9. **Confidentiality of Records**. Consultant shall establish and maintain procedures and controls that are acceptable to PMGAA for the purpose of assuring that no information contained in its records or obtained from PMGAA or from others in carrying out its functions under the Contract shall be used by or disclosed by it, its agents, officers, or employees, except as required to efficiently perform duties under this Contract. Persons requesting such information should be referred to PMGAA. Consultant also agrees that any information pertaining to individual persons shall not be divulged other than to employees or officers of Consultant as needed for the performance of duties under the Contract, unless otherwise agreed to in writing by PMGAA.

10. **Gratuities.** PMGAA may, by written notice to the Consultant, cancel this Contract if it is found that gratuities, in the form of entertainment, gifts or otherwise, were offered or given by Consultant or any agent or representative of Consultant, to any officer or employee of PMGAA involved in the amending, or the making of any determinations with respect to the performing of such Contract. If this Contract is canceled by PMGAA under this provision, PMGAA shall, in addition to any other rights and remedies, repay to the Consultant the amount of the gratuity.

11. **Applicable Law.** This Contract shall be governed by, and PMGAA and Consultant shall have, all remedies afforded each by the *Uniform Commercial Code*, as adopted in the state of Arizona, except as otherwise provided in this Contract or in laws pertaining specifically to PMGAA. This Contract shall be governed by

the laws of the state of Arizona, and suits pertaining to this Contract shall be brought only in federal or state courts in the state of Arizona.

12. **Contract**. This Contract is based on and the result of a negotiated Scope of Work and Proposal, Bid or Statement of Qualifications submitted by Consultant under this RFP, IFB or RFQ. The Contract contains the entire agreement between PMGAA and Consultant. No prior oral or written agreements, contracts, proposals, negotiations, purchase orders, or master agreements (in any form) are enforceable between the parties.

13. **Contract Amendments**. This Contract shall be modified only by a written amendment signed by the PMGAA Executive Director or his/her designee, and persons duly authorized to enter into contracts on behalf of Consultant.

14. **Provisions Required by Law**. Each and every provision of law and any clause required by law to be in the Contract shall be read and enforced as though it were included herein, and if through mistake or otherwise any such provision is not inserted, or is not correctly inserted, then upon the application of either party the Contract shall forthwith be physically amended to make such insertion or correction.

15. **Severability.** The provisions of this Contract are severable to the extent that any provision or application held to be invalid shall not affect any other provision or application of the Contract, which may remain in effect without the valid provision, or application.

16. **Protection of Government Property.** Consultant shall use reasonable care to avoid damaging all PMGAA property, including buildings, equipment, and vegetation (such as trees, shrubs, and grass). If Consultant damages PMGAA's property in any way, Consultant shall immediately report such damage to PMGAA and repair or replace the damage at no cost to PMGAA, as directed by the PMGAA Executive Director. If Consultant fails or refuses to repair or replace the damage, then PMGAA may terminate the Contract, and PMGAA shall deduct the repair or replacement cost from money due Consultant under the Contract.

17. **Interpretation – Parol Evidence.** This Contract is intended by the parties as a final expression of their agreement and is intended also as a complete and exclusive statement of the terms thereof. No course of prior dealings between the parties and no usage of the trade shall be relevant to supplement or explain any term used in this Contract. Acceptance or acquiescence in a course of performance rendered under this Contract shall not be relevant to determine the meaning of this Contract even though the accepting or acquiescing party has knowledge of the nature of the performance and opportunity to object.

18. **Subcontracts.** Consultant shall not assign any rights or interest nor enter into any subcontract with any other party to furnish any of the materials, goods or services specified herein without the prior written permission of PMGAA. PMGAA may, at its sole discretion, accept or reject proposed subcontractors or assignment. PMGAA shall notify Consultant of its acceptance or rejection within forty-five (45) days or written request by Consultant. All subcontracts shall comply with federal and state laws and regulations applicable to the materials, goods or services covered by the subcontract and shall include all the terms and conditions set forth herein, which shall apply with equal force to the subcontract, as if the subcontractor were the Consultant referred to herein. Consultant is responsible for Contract performance whether subcontractors are used.

19. **No Waiver.** No provision in this Contract shall be construed, expressly or by implication, to waive either party's existing or future claim, right, or remedy available by law for breach of contract. The failure of either party to insist on strict performance of any Contract term or condition; to exercise or delay exercising any right or remedy provided in the Contract or by law; or to accept materials, services, or Consultant's services under this Contract or imposed by law, shall not be deemed a waiver of any right of either party to insist upon strict performance of the Contract.

20. **Warranties.** Consultant warrants that all materials and services delivered under this Contract shall conform to the specifications thereof. Mere receipt of shipment of the material or service specified and any inspection incidental thereto by PMGAA, shall not alter or affect the obligations of Consultant or the rights of PMGAA under the foregoing warranties. Additional warranty requirements may be set forth in this Contract.

21. **Indemnification.** To the fullest extent permitted by law, Consultant shall defend, save, indemnify, and hold harmless PMGAA, its agents, representatives, officers, directors, officials, and employees (collectively the "Indemnitees"), for, from and against all claims, damages, losses and expenses, including but not limited to attorney fees, court costs, expert witness fees, and the cost of appellate proceedings, relating to, arising out of, or alleged to have resulted from the Consultant's acts, errors, omissions, or mistakes relating to Consultant's services under this Contract.

22. **Right to Assurance.** Whenever one party to this Contract in good faith has reason to question the other party's intent to perform, the former party may demand that the other party give a written assurance of this intent to perform. If a demand is made and no written assurance is given within five (5) business days, the demanding party may treat this failure as an anticipatory repudiation with this Contract.

23. **Advertising.** Consultant shall not advertise or publish information concerning this Contract without prior written consent of PMGAA.

24. **Right to Inspect.** PMGAA may, at reasonable times, and at PMGAA's expense, inspect the place of Consultant's or any of Consultant's subcontractor's business, which is related to the performance of this Contract or related subcontract.

25. **Force Majeure.** In the event either party shall be delayed or hindered in or prevented from the performance of any covenant, agreement, work, service, or other act required under this Contract to be performed by such party ("Required Act"), and such delay or hindrance is due to causes entirely beyond its control such as riots, insurrections, martial law, civil commotion, war, fire, flood, earthquake, or other casualty or acts of God ("Force Majeure Event"), then the performance of such Required Act shall be excused for the period of delay and the time period for performance of the Required Act shall be extended by the same number of days in the period of delay. For purposes of this Contract, the financial inability of Consultant to perform any Required Act, including, without limitation, failure to obtain adequate or other financing shall not be deemed to constitute a Force Majeure Event. A Force Majeure Event shall not be deemed to commence until ten (10) days before the date on which the party who asserts some right, defense, or remedy arising from or based upon such Force Majeure Event gives written notice thereof to the other party. If abnormal adverse weather conditions are the basis for a claim for an extension of time due to a Force Majeure Event, the written notice shall be accompanied by data substantiating (a) that the weather conditions were abnormal for the time and could not have been reasonably anticipated and (b) that the weather conditions complained of had a significant adverse effect on the performance of a Required Act. To establish the extent of any delay to the performance of a Required Act due to abnormal adverse weather, a comparison will be made of the weather for the time of performance of the Required Act with the average of the preceding ten (10) years' climatic range based on the National Weather Service statistics for the nearest weather reporting station to the Premises. No extension of time for or excuse for a delay in the performance of a Required Act will be granted for rain, snow, wind, cold temperatures, flood, or other natural phenomena of normal intensity for the locality where the Premises are located.

26. **Inspection.** All material or service is subject to final inspection and acceptance by PMGAA. Material or service failing to conform to the specifications of this Contract will be held at Consultant's risk and may be returned to Consultant. If so returned, all costs are the responsibility of Consultant. Noncompliance shall conform to the cancellation clause set forth in this Contract.

27. **Exclusive Possession.** All services, information, computer program elements, reports, and other deliverables, which may be created under this Contract, are the sole property of PMGAA and shall not be used or released by Consultant or any other person except with prior written permission by PMGAA.

28. **Title and Risk of Loss.** The title and risk of loss of materials or services shall not pass to PMGAA until PMGAA actually receives the material or service at the Airport, unless otherwise provided within this Contract.

29. **Liens.** All materials, services, and other deliverables supplied to PMGAA under this Contract must be free of all liens and other encumbrances. Upon request of PMGAA, Consultant shall provide a formal release of all liens.

30. **Licenses.** Consultant shall maintain in current status all federal, state, and local licenses and permits required for the operation of the business conducted by Consultant as applicable to this Contract.

31. **Subsequent Employment.** PMGAA may cancel this Contract without penalty or further obligation in accordance with A.R.S. Section 38-511 if any person significantly involved in initiating, negotiating, securing, drafting, or creating the contract, on behalf of the PMGAA is or becomes, at any time while the Contract or any extension of the contract is in effect, an employee of, or a contractor to any other party to this Contract with respect to the subject matter of the Contract. Such cancellation shall be effective when the parties to this Contract receive written notice from PMGAA, unless the notice specifies a later time.

32. **Clean Up.** Consultant shall at all times keep Contract performance areas, including storage areas used by the Consultant, free from accumulation of waste material or rubbish and, prior to completion of the work, remove any rubbish from the premises and all tools, scaffolding, equipment and materials not property of PMGAA. Upon completion of any repair, Consultant shall leave the work and premises in clean, neat, and workmanlike condition.

33. **Patents.** Consultant shall defend, indemnify, and hold harmless PMGAA, its officers and employees from all liabilities, claims, damages, costs, or expenses, including, but not limited to attorneys' fees, for any alleged infringement of any person's patent rights or copyrights in consequence of the use by PMGAA, its officers, employees, agents, and other duly authorized representatives of tangible or intellectual property supplied to PMGAA by Consultant under this Contract.

34. **Records and Audit Rights.** Consultant's and all of its approved subcontractors' books, records, correspondence, accounting procedures and practices, and any other supporting evidence relating to this Contract, including the papers of all Consultant and subcontractor employees that work on the Contract (all the foregoing collectively referred to as "Records"), must be open to inspection and subject to audit and/or reproduction during normal working hours by PMGAA. PMGAA is entitled to evaluate and verify all invoices, payments or claims based on Consultant's and its subcontractor's actual costs (including direct and indirect costs and overhead allocations) incurred or units expended directly in the performance of work under this Contract. For any audit under this Section, Consultant and its subcontractors hereby waive the right to keep such Records confidential. PMGAA is entitled to access to these Records from the effective date of this Contract for the duration of the work and until five years after the date of final payment by PMGAA to Consultant under the Contract. During normal working hours, PMGAA is entitled to access to all necessary Consultant and subcontractor facilities and shall be provided adequate and appropriate workspace, in order to conduct audits under this Section. PMGAA shall give Consultant or subcontractors reasonable advance notice of intended audits. Consultant shall require its subcontractors to comply with the provisions of this Section by including its requirements in all subcontracts related to this Contract.

35. **E-Verify Requirements.** To the extent applicable under A.R.S. § 41-4401, Consultant and its subcontractors warrant compliance with all federal immigration laws and regulations that relate to their employees, and compliance with the E-Verify requirements under A.R.S. §23-214(A). Consultant's or its subcontractors' failure to comply with such warranty shall be deemed a material breach of this Contract and may result in the termination of this Contract by PMGAA. PMGAA shall have the right to inspect the papers of Consultant's and any of Consultant's subcontractor's employee who works on this Contract to ensure the Consultant is complying with this paragraph.

Phoenix-Mesa Gateway Airport Authority
5835 S Sossaman Road
Mesa, Arizona 85212-6014
www.gatewayairport.com

Management Information Report

To: Board of Directors
From: Chuck Odom, Chief Financial Officer
Through: J. Brian O'Neill, A.A.E., Executive Director/CEO
Re: July 2021 Financials
Date: September 21, 2021

Attached is the monthly Financials Report for July 2021.

Phoenix-Mesa Gateway Airport Authority
AIRPORT - All Operations P&L
July, 2021

	Month of July 2021				Y-T-D as of July 2021			
	July FY21 Actual	July FY22 Actual	YOY Variance	B/(W)	YTD FY21 Actual	YTD FY22 Actual	Y-T-D Variance	B/(W)
Aeronautical Operating Revenues								
Aircraft Parking	15,180	18,939	3,759	25%	15,180	18,939	3,759	25%
Fuel Flowage Fees	54,254	47,961	(6,293)	-12%	54,254	47,961	(6,293)	-12%
Landing Fees	93,617	143,033	49,416	53%	93,617	143,033	49,416	53%
Lease Income Aero	298,012	356,130	58,118	20%	298,012	356,130	58,118	20%
Fuel Sales	388,705	414,544	25,839	7%	388,705	414,544	25,839	7%
Services Sold - Aero	438,148	447,157	9,009	2%	438,148	447,157	9,009	2%
Sub-total Aero Operating Revenues	1,287,916	1,427,764	139,848	11%	1,287,916	1,427,764	139,848	11%
Non-Aeronautical Operating Revenues								
Concessions	49,212	74,223	25,011	51%	49,212	74,223	25,011	51%
Lease Income Non-Aero	105,217	116,603	11,386	11%	105,217	116,603	11,386	11%
Parking	303,177	513,542	210,365	69%	303,177	513,542	210,365	69%
Rental Car Fees	69,924	109,934	40,010	57%	69,924	109,934	40,010	57%
Svcs Sold - Non Aero	4,372	1,369	(3,003)	-69%	4,372	1,369	(3,003)	-69%
Sub-total Non-Aero Operating Revenues	531,902	815,671	283,769	53%	531,902	815,671	283,769	53%
Total Operating Revenues	**1,819,818**	**2,243,435**	**423,617**	**23%**	**1,819,818**	**2,243,435**	**423,617**	**23%**
Operating Expenses								
Costs of Goods Sold	204,427	272,571	(68,144)	-33%	204,427	272,571	(68,144)	-33%
Personnel	666,111	803,053	(136,942)	-21%	666,111	803,053	(136,942)	-21%
Comm & Utilities	94,386	105,838	(11,452)	-12%	94,386	105,838	(11,452)	-12%
Contractual Services	383,266	408,661	(25,395)	-7%	383,266	408,661	(25,395)	-7%
Insurance	45,001	50,225	(5,224)	-12%	45,001	50,225	(5,224)	-12%
Other	14,544	20,737	(6,193)	-43%	14,544	20,737	(6,193)	-43%
Repair & Maintenance	28,353	43,498	(15,145)	53%	28,353	43,498	(15,145)	-53%
Supplies & Materials	66,954	108,088	(41,134)	-61%	66,954	108,088	(41,134)	-61%
Air Service Incentives [2,000,000]	0	0	0	0	0	0	0	0
Operating Contingency [2,353,258]	0	0	0	0	0	0	0	0
Total Operating Expenses	**1,503,042**	**1,812,671**	**(309,629)**	-21%	**1,503,042**	**1,812,671**	**(309,629)**	-21%
Operating Income (Loss)	**316,776**	**430,764**	**113,988**	36%	**316,776**	**430,764**	**113,988**	36%
	17.4%	19.2%			17.4%	19.2%		
Depreciation		1,419,900				1,419,900		
CRRSAA Act Recovery		3,177,129						

Phoenix-Mesa Gateway Airport Authority
5835 S Sossaman Road
Mesa, Arizona 85212-6014
www.gatewayairport.com

Management Information Report

To: **Board of Directors**
From: **Chuck Odom, Chief Financial Officer**
Through: **J. Brian O'Neill, A.A.E., Executive Director/CEO**
Re: Solicitation Notification
Date: **September 8, 2021**

This report is to provide notification of the active and upcoming solicitations to help ensure compliance with the Phoenix-Mesa Gateway Airport Authority procurement transparency clause. The active activities include the following:

Active/Pending Solicitations

Type Solicitation	Number	Title	Anticipated Contract Award (Board Action)
Request for Qualifications	2022-002-RFQ	CMAR for Terminal Modernization (Pre-Construction Services)	September 2021
Request for Proposals	2022-007-RFP	Fueling Stands	October 2021
Request for Proposals	2022-003-RFP	Parking Access Revenue Control System	November 2021
Request for Qualifications	2022-006-RFQ	Rental Car Care Facility Design Services	November 2021
Request for Proposals	2022-001-RFP	Master Developer, Gateway*East*	November 2021

Future Solicitations

Type Solicitation	Number	Title	Scheduled for Release	Anticipated Contract Award (Board Action)
Invitation for Bid	2022-004-IFB	Taxiway W Rehabilitation	September 2021	October 2021
Request for Qualifications	2022-005-RFQ	Fabrication and Installation of Signs	September 2021	November 2021
Request for Proposals	2022-011-RFP	Pre-Conditioned Air Units	September 2021	November 2021
Request for Proposals	2022-012-RFP	On-Call Videography & Drone Videography Services	October 2021	January 2022

If you have any questions about the solicitations or the procurement process, please feel free to contact me at 480-988-7613.

Phoenix-Mesa Gateway Airport Authority
5835 S Sossaman Road
Mesa, Arizona 85212-6014
www.gatewayairport.com

Management Information Report

To: Board of Directors
From: Chuck Odom, CFO
Through: J. Brian O'Neill, A.A.E., Executive Director/CEO
Re: Shuttle Service - Emergency Procurements
Date: September 21, 2021

As previously communicated via email, PMGAA's parking management contractor, Republic Parking Systems LLC, (Republic) experienced several significant service failures during July; resulting in extremely long wait times for parking shuttles, missed flights, and delayed departures due to flight crews arriving late at the terminal. Pandemic-related labor shortages and stiff competition for CDL-licensed drivers has, and continues, to create challenges for Republic's operation at Gateway Airport. As an immediate, but temporary solution, PMGAA employees had supplemented Republic's parking shuttle service by driving passengers between the terminal and the parking lot using the Airport's courtesy van. This was not an ideal situation, nor sustainable, but was necessary.

On July 21, 2021 PMGAA Executive Staff authorized the emergency procurement of supplementary shuttle service with JET Limousines and Transportation LLC (JET). JET provided additional shuttle service from July 22, 2021 through September 6, 2021. The cost for shuttle service during this time was $40,658.75. JET offered the best option out of the three proposals obtained from vendors to fill the necessary days and times for shuttle service. This service contributed to a positive customer experience at the Airport.

In accordance with PMGAA's Procurement Policy, this report is to notify the Board of the emergency procurement for these urgently needed services. Staff reviewed the proposals to ensure pricing was in line with the expected material and services to provide satisfactory work results.

Phoenix-Mesa Gateway Airport Authority
5835 S Sossaman Road
Mesa, Arizona 85212-6014
www.gatewayairport.com

Management Information Report

To: Board of Directors
From: Chuck Odom, CFO
Through: J. Brian O'Neill, A.A.E., Executive Director/CEO
Re: Direct Select Procurement – SWCA Environmental Consultants
Date: September 21, 2021

Due to the imminent development of the southern portion of the Gateway Airport East property, by a prominent Aerospace Company, the Executive Director approved the engagement of SWCA Environmental Consultants (SWCA) directly, without the use of a formal solicitation, to complete Data Recovery Mitigation Services in the Locus 2 Archeological Site, pending Board approval of the procurement for the not to exceed amount of $142,506.

Before any development to this piece of property can take place, the Airport is required to complete Data Recovery Mitigation, as identified in the 1997 Dames and Moore study. Due to time constraints for the development of the property, conducting a formal solicitation would delay the project considerably and potentially risk termination of the deal.

SWCA has intimate knowledge of all PMGAA historic properties, current and past archaeological sites and prepares PMGAA's Annual Report of Historic Properties that is submitted to PMGAA's stakeholders and to the State Historic Preservation Office. SWCA has been PMGAA's cultural and historic properties consultant for numerous prior projects and maintains an unmatched wealth of historic knowledge about the Airport that has proven to be of value on a routine basis.

Due to their in-depth knowledge of the Phoenix-Mesa Gateway Airport, as well as their professional firm experience in archaeological research, surveying, testing, monitoring and data recovery programs, PMGAA staff believes that SWCA Environmental Consultants is the most qualified firm to complete this important and time sensitive Data Recovery Mitigation project. Staff believes the cost proposal provided by SWCA is in line with the expected services.

NOTICE AND AGENDA OF MEETING OF THE
PHOENIX-MESA GATEWAY AIRPORT AUTHORITY
BOARD OF DIRECTORS

Pursuant to A.R.S. § 38-431.02, notice is hereby given to the members of the Phoenix-Mesa Gateway Airport Authority and to the public that the Phoenix-Mesa Gateway Airport Authority will hold a meeting open to the public on **Tuesday, October 19, 2021 beginning at 9:00 a.m.** in the Board Room (Saguaro A & B) of the Gateway Administration Building, 5835 South Sossaman Road, Mesa, Arizona. Members of the Phoenix-Mesa Gateway Airport Authority may attend either in person or by telephone. The Board may vote to hold an executive session for the purpose of obtaining legal advice from the Board's attorney on any matter listed on the agenda pursuant to A.R.S. § 38-431.03 (A)(3)&(4).

The agenda for the meeting is as follows:

1. **Call to Order** (Mayor John Giles, Chair)
   Members of the Phoenix-Mesa Gateway Airport Authority will attend either in person or via videoconference.

2. **Roll Call** (Mayor John Giles, Chair)

3. **Pledge of Allegiance**

4. **Motion to convene into Executive Session**
   a) Pursuant to A.R.S. § 38-431-03 (A)(1), the Board of Directors may convene into executive session for the purpose of discussion and consideration regarding the Executive Director/CEO's annual review
   b) Pursuant to A.R.S. § 38-431-03 (A)(7), the Board of Directors may convene into executive session for the purpose of discussion and consideration regarding the purchase, sale, or lease of real property and discussion and consideration of a real estate lease transaction.

5. **Motion to Reconvene into Regular Session**

6. **Call to the Public**
   Members of the Board may not discuss items that are not on the agenda. Therefore, action taken as a result of public comment will be limited to directing staff to study the matter or scheduling the matter for further consideration and decision at a later date. Maximum of three minutes per speaker.

7. **Executive Director's Report** - J. Brian O'Neill, A.A.E., Executive Director/CEO

8. **Presentation: Audited Financials** – Sandra Cronstrom, Principal CliftonLarsonAllen, LLP

9. **Consent Agenda**

   a) **Minutes** of the Board Meeting held on September 21, 2021.

   b) **Resolution No. 21-42 –** Authorizing Phoenix-Mesa Gateway Airport Authority's (PMGAA's) insurance broker, **USI Insurance Services LLC**, to purchase benefit plans (medical, dental, vision, basic life/accidental death & dismemberment, and short-term disability) from various carriers. This consists of a 12-month renewal January 1, 2022 through December 31, 2022 with an estimated plan cost of $1,319,386.

   c) **Resolution No. 21-43 –** Authorizing the Third Amendment to the Car Rental Concession Agreement with **Enterprise Leasing Company of Phoenix, LLC**.

d) **Resolution No. 21-44 –** Authorizing the First Amendment to the Car Rental Concession Agreement with the **Hertz Corporation**.

e) **Resolution No. 21-45 –** Authorizing the purchase of five fueling stands from **WSW Corp. dba WAAG (WAAG)** in an amount not to exceed $59,018.41.

f) **Resolution No. 21-46 –** Authorizing an amendment to the **Executive Director/CEO employment contract effective October 1, 2021**.

g) **Resolution No. 21-47 –** Approving an Authorization of Services with **Dibble Engineering** for Engineering Design Services for the Center RWY 12C/30C Design and Reconstruction Project in an amount not to exceed $569,673 under CIP 1202.

h) **Resolution No. 21-48 –** Approving an Authorization of Services with **Kimley-Horn & Associates** for Engineering Design Services for a Proposed Road and Utility Extensions, for a new Aeronautical Users Infrastructure, being developed in the southeast corner of the Airport, in an amount not to exceed $171,597 under CIP 1237.

Consideration and Possible Approval of:

10. Board Member Comments/Announcements

11. Next Meeting: Tuesday, November 16, 2021 at 9:00 a.m.

12. Adjournment

Persons with a disability may request a reasonable accommodation, such as a sign language interpreter, by contacting Misty Johnson at 480-988-7607 or mrjohnson@gatewayairport.com. Requests should be made as early as possible to allow time to arrange the accommodation.

Phoenix-Mesa Gateway Airport

- **Five-gate terminal addition design unveiled**
- **Air service enhancements coming this fall/winter**
- **SkyBridge Arizona planning millions of dollars of new infrastructure**

Executive Director's Report

October 2021

Financial Snapshot

OPERATING INCOME	August		Month Variance	FYTD Comparison		FYTD Variance
	FY21	FY22		FY21	FY22	
Revenues	$2,014,459	$1,868,728	($145,731)	$3,834,276	$4,112,163	$277,887
Less Expenses	$1,438,823	$1,603,431	$164,608	$2,941,867	$3,416,100	$474,233
Operating Income *(before depreciation)*	**$575,636**	**$265,297**	**($310,339)**	**$892,409**	**$696,063**	**($196,346)**

Investment Fund Balances: As of August, Local Governmental Investment Pool (LGIP) 700 = $19,077,225; Wells Fargo; Collateralized Money Market = $7,445,802 and Collateralized CD's = $35,277,640; Total $61,800,667. The month-over-month increase attributable to investment earnings was $3,400. The remainder of the increase in investments was a transfer of $7,000,000 from the General Fund.

Finance and Accounting

Phoenix-Mesa Gateway Airport Authority (PMGAA, Authority) reported a net operating income of $265,297 for August 2021. This is the second-best August for financial results in PMGAA history. Aeronautical revenues were down 24% compared to August 2020 due to a lack of U.S. Forest Service activity during the month. Non-aeronautical revenues for the fiscal-year-to-date (FYTD) 2022 improved by 52% due to an increase in commercial passenger activity at Phoenix-Mesa Gateway Airport (Airport, Gateway Airport).

Through the end of August 2021, PMGAA has submitted a total of $4,175,991 for CRRSAA Act operating grant reimbursements. These reimbursements are not reflected in the operating results.

Congratulations to the PMGAA Finance Department for achieving a clean FY21 Independent Financial Audit and Single Audit with no findings. Great job team!

PMGAA Solicitations

Active/Pending Solicitations

TYPE OF SOLICITATION	Number	Title	Anticipated Contract Award
Request for Proposals	2022-007-RFP	Fuel Stands	October 2021
Request for Proposals	2022-003-RFP	Parking Access Revenue Control System	November 2021
Request for Qualifications	2022-006-RFQ	Rental Car Care Facility Design Services	November 2021
Request for Proposals	2022-001-RFP	Master Developer for Gateway***East***	November 2021
Request for Proposals	2022-011-RFP	Pre-Conditioned Air Units	November 2021

Future Solicitations

TYPE OF SOLICITATION	Number	Title	Scheduled for Release
Invitation for Bid	2022-004-IFB	Taxiway W Rehabilitation	October 2021
Request for Qualifications	2022-005-RFQ	Fabrication & Installation of Signs	October 2021
Request for Proposals	2022-012-RFP	On-Call Videography & Drone Videography Services	October 2021

Airport Operations

Air Service Enhancements Coming to Gateway Airport this Fall/Winter

- **Amarillo, TX twice weekly starting November 18th**
- **Flint, MI twice weekly starting November 18th**
- **Springfield, IL twice weekly starting November 18th**
- **Tulsa, OK twice weekly starting November 18th**
- **Orange County, CA twice weekly starting November 19th**
- **Spokane, WA twice weekly starting November 22nd**
- **Minneapolis, MN twice weekly starting November 24th**

- **Edmonton, Alberta, Canada twice weekly starting September 17th**
- **Winnipeg, Manitoba, Canada twice weekly starting November 1st**
- **Toronto, Ontario, Canada four times per week starting December 7th**

- **Calgary, Alberta, Canada twice weekly starting October 31st**

- **Toronto, Ontario, Canada twice weekly starting October 31st**
- **Vancouver, British Columbia, Canada twice weekly starting November 1st**
- **Calgary, Alberta, Canada twice weekly starting December 15th**
- **Edmonton, Alberta, Canada three times per week starting December 17th**

- **Minneapolis, MN four times per week starting November 24th**

Operations Statistics

PASSENGER COUNTS		August		% Change	FYTD		% Change
		FY21	FY22		FY21	FY22	
Passengers	TOTAL	**73,661**	**107,973**	**47%**	**116,485**	**269,041**	**62%**
	Deplaned	37,785	54,261	44%	87,627	136,667	61%
	Enplaned	35,826	53,712	50%	81,858	132,374	62%
Allegiant	Scheduled	73,561	106,202	44%	166,435	263,351	58%
WestJet	Scheduled	0	0	0%	0	0	0%
Swoop	Scheduled	0	0	0%	0	0	0%
Avelo	Scheduled	0	1,040	100%	0	4,873	100%
Elite/Swift	Charter	50	731	1,362%	50	817	1,534%

OPERATIONS	August		% Change	FYTD		% Change
	FY21	FY22		FY21	FY22	
Air Carrier	912	967	6%	1,887	2,166	15%
Military	264	202	-23%	433	585	35%
General Aviation	18,487	16,929	-8%	35,157	33,000	-6%
TOTAL	**19,663**	**18,098**	**-8%**	**37,477**	**35,751**	**-5%**

PMGAA Team Member Spotlight

Employee Name: **Art Montoya**

Employee Title: **Network Engineer**

PMGAA Department: **Information Technology**

Years with PMGAA: **15**

What are your job responsibilities for PMGAA? Since IT is a small department, all of us cover more than our primary skillsets, however, I am primarily responsible for managing our network, cyber security, small to medium size project management, technical liaison for ENF, and managing our mobile devices. But most importantly, making sure our staff is able to do their jobs with the technology we have.

What is your most memorable Gateway Airport moment? I think my most memorable moment was my first Presidential visit. I was a part of the Secret Service briefings and got to see some of the behind-the-scenes things that take place when the President travels. It was exciting to witness, and I was proud to be a small part of it. I've been involved in other visits since then, but it's always the first one that is the most memorable.

What is something people may not know about you? Thanks to a friend who is a "travel mile's hacker" I took an around the world trip with him with all first-class flights over a two-week period. We flew on an Emirates Airbus A380 to Dubai for one leg and I was able to take a shower at 39,000 ft. People thought we were famous because we stepped out of First Class to Business Class to get a drink at the bar at the back of the plane. Somewhere out there someone has a few pictures with me thinking I was someone special.

Gateway Aviation Services

During the month of August 2021, Gateway Aviation Services (GAS), the PMGAA-operated FBO, pumped more than 1.4 million gallons of aviation fuel, a 15% decrease compared to last August due to no U.S. Forest Service activity.

FUEL (Gallons)	August			FYTD		
	FY21	FY22	% Change	FY20	FY21	% Change
AvGas	51,205	35,690	-30%	98,212	66,959	-32%
Retail Jet A	42,614	39,471	-7%	76,669	82,245	7%
Contract	563,915	293,109	-48%	937,149	593,366	-37%
Commercial	992,807	1,038,946	5%	2,087,464	2,317,191	11%
TOTAL	1,650,541	1,407,216	-15%	3,199,524	3,059,761	-4%

Engineering and Planning

New Five-Gate Terminal Addition Features Impressive Indoor/Outdoor Space

Conceptual Design of Outdoor Courtyard

Conceptual Design of Indoor Walkway

Gateway Airport is fairly unique among commercial service airports because it offers customers both outdoor and indoor environments on the secure side of its terminal. Visitors from distant destinations really enjoy the opportunity to soak up some last-minute sunshine before boarding their aircraft and heading back home.

As the Airport continues planning for construction of a new, five-gate terminal addition, architects are incorporating ample outdoor space into their project design (please see conceptual walkway renderings above). Landscaped courtyards, sitting areas, restaurant seating, and dog park facilities have all been incorporated into the 30,000 sq. ft. terminal addition.

This project is being fast-tracked to ensure the facility is operational by the busy travel season next winter.

New Cell Phone Lot Taking Shape at Corner of Sossaman and Ray Roads

Cell phone lots are parking lots, typically located in the vicinity of a commercial airport, where people can wait before picking up arriving passengers. The purpose of these lots is to improve roadway congestion by reducing the number of vehicles circling around the airport waiting for air travelers to land, disembark their aircraft, retrieve checked baggage, and make their way to the terminal curb.

Fresh Pavement Markings on New Cell Phone Lot

Gateway Airport is constructing a new Cell Phone Lot at the corner of Sossaman and Ray Roads. This location is much more strategic and visible than the current Cell Phone Lot located south of the terminal on Sossaman Road. The new lot will be operational by the second week in October, just in time to be available for the upcoming busy holiday travel season.

Community Noise Report

During the month of August 2021, PMGAA received aircraft noise calls from a total of seven area residents, compared to 15 callers during August last year.

Arizona is now entering a stretch of beautiful weather, and area residents are much more likely to have windows and doors open to enjoy the seasonal temperatures. Historically, that would have meant a sharp increase in community noise calls. However, since Allegiant, Gateway Airport's largest airline, converted all of its older, louder, less efficient MD-80 aircraft to newer, much quieter, more efficient Airbus A319 and Airbus A320 aircraft several years ago, the noise environment around the Airport has dramatically improved and noise calls have decreased.

CALLERS	August		FYTD	
	FY21	FY22	FY21	FY22
Total	**15**	**7**	**21**	**23**

AIRCRAFT TYPE	August		FYTD	
	FY21	FY22	FY21	FY22
	Callers	Callers	Callers	Callers
Commercial	6	7	9	19
GA Total	7	0	9	2
Helicopter	0	0	0	0
Military	2	0	3	2
Total	**15**	**7**	**21**	**23**

LOCATION	August		FYTD	
	FY21	FY22	FY21	FY22
Mesa	5	1	6	5
Gilbert	2	6	4	14
Gold Canyon	4	0	5	0
Queen Creek	2	0	4	2
Queen Valley	1	0	1	1
San Tan Valley	0	0	0	0
Apache Junction	0	0	0	1
Chandler	1	0	1	0
TOTAL	**15**	**7**	**21**	**23**

Business Development

Progress Continues on Gateway Executive Airpark Hangars

Gateway Executive Airpark Hangar Floors Being Prepped for Concrete

It's great to see when design plan sets become actual construction projects. Slab concrete floors are currently being prepped and poured for two of the three hangars included in the Gateway Executive Airpark.

For those who haven't visited the Airport and driven past the project adjacent to Sossaman Road, the Gateway Executive Airpark is a new 183,000 sq. ft. state-of-the-art, full-service hangar complex currently under construction at the north end of Gateway Airport's airfield between Textron Aviation's Mesa Service Center and Embraer's Executive Jet Service Center. This exciting private development project includes both multi-tenant and single tenant hangars sized to accommodate larger jets, multiple smaller aircraft, and helicopters.

The first two hangars, totaling approximately 71,000 sq. ft., are schedule to be available for lease by the end of the second quarter 2022.

Marketing and Community Relations

Kids Love Aviation…And Gateway Airport Loves Kids!

Airports can be good neighbors. Communication, honesty, transparency, and inclusion are important tenets of the long-term, successful relationships between Gateway Airport and the neighboring communities in the growing Phoenix East Valley.

Recent Tour Group Learning about Careers in Aviation

One of the many programs developed by the Airport to foster better relations with adjacent communities is the Aviation Career Education (ACE) Program. This popular program is designed to get school-aged children from across the region excited about career opportunities in the aviation industry. PMGAA Community Relations Manager Brian Sexton hosts several events each year to give students first-hand exposure to the many different facets of Gateway Airport's operation. The program includes tours, guest speakers, job shadows, and up-close access to some really cool aircraft. Kids love aviation…and Gateway Airport loves kids!

MINUTES OF PUBLIC MEETING OF THE
PHOENIX-MESA GATEWAY AIRPORT AUTHORITY
BOARD OF DIRECTORS | September 21, 2021

A public meeting of the Phoenix-Mesa Gateway Airport Authority (PMGAA) was convened on Tuesday, September 21, 2021, beginning at 9:00 a.m. in the Board Room (Saguaro A&B) of the Gateway Administration Building, 5835 S Sossaman Road, Mesa, Arizona.

Members Present

Mayor John Giles, Mesa
Councilmember Jim Waring, Phoenix (*via videoconference*)
Mayor Brigette Peterson, Gilbert
Mayor Chip Wilson, Apache Junction (*via videoconference*)
Lt. Governor Monica Antone, Gila River Indian Community *
Mayor Gail Barney, Queen Creek

** Neither present nor represented*

Airport Staff Present

J. Brian O'Neill, Executive Director/CEO
Scott Brownlee, Deputy Director/COO
Chuck Odom, CFO
Misty Johnson, Clerk of the Board
Jill Casson Owen, Attorney (*via videoconference*)

1. **Call to Order** at 9:05 a.m. (Mayor Giles)

2. **Roll Call**

3. **Pledge of Allegiance**

4. **Call to the Public**
   There were no public comments.

5. **Executive Director's Report** J. Brian O'Neill, A.A.E., Executive Director/CEO

   Executive Director O'Neill provided a briefing on PMGAA financial performance, passenger activity, the community noise report, and various Airport projects. Fiscal Year-to-Date (FYTD) Net Operating Income is $430,764.

   - The performance metrics for year-end fiscal year 2021 (YEFY21) show a -12% decrease in total commercial passengers and net operating income of $3,852,893.
   - Gateway Airport experienced its highest July passenger activity in the history of the Airport, increasing passengers by 73% compared to July 2020.
   - Swoop Airlines has announced it is planning to return to Gateway Airport for the winter season with nonstop service to Edmonton, Winnipeg, and Toronto, Canada beginning in September and continuing through the end of April.
   - WestJet Airlines has also announced its return to Gateway Airport for the winter season with nonstop service to Calgary, Canada beginning October 31st and continuing through the end of April.
   - Flair Airlines is returning to Gateway Airport this fall with seasonal, nonstop routes to Toronto, Vancouver, Calgary, and Edmonton, Canada.

DRAFT

- Sun Country Airlines will be coming to the Airport for the first time beginning in November with flights to Minneapolis.
- Allegiant Air will begin nonstop service beginning in November to Amarillo Texas, Flint Michigan, Springfield Illinois, Tulsa Oklahoma, Orange County California, Spokane Washington, and Minneapolis Minnesota.
- Concrete flooring is being poured for the Gateway Executive Airpark's 183,000 SF hangar complex. This impressive three-hangar project is comprised of both multi-tenant and single tenant lease opportunities. The first two hangars should be operational in the second quarter of 2022.
- SkyBridge Arizona continues working with the City of Mesa through the entitlement process to obtain permitting, and variances needed to progress with the design phase for its 127-room Wyndham dual-brand hotel along Sossaman Road. The hotel will offer rooms for both transient overnight guests and extended stay customers.
- SkyBridge Arizona has acknowledged they will bring forward a take-down package for two additional industrial buildings to fulfill the need for large, single tenant flex industrial buildings. These two buildings will be approximately 200,000 SF feet and 240,000 SF respectively. In addition, SkyBridge Arizona is working with the Authority on the design and review process regarding elements of the horizontal infrastructure. SkyBridge Arizona will be putting in a taxiway extension, roadways, sewer, water, and fiber.
- Gateway***East*** is a 400-acre mixed use non-aeronautical master development opportunity located on the east side of the Airport. The Gateway***East*** Master Developer solicitation continues. The RFQ process had 12 highly qualified submissions. The top four submissions have been invited to participate in an RFP process. The interview process is being conducted this week. The finalists are The Boyer Company, Catellus Development Corporation, Douglas Allred Corporation and Trammel Crow Company & Sunbelt Holdings. PMGAA plans to have a master developer for Gateway***East*** selected by the end of 2021.
- The 550 SF tower cab has been successfully lifted and placed on top of the 225,000-pound steel structure. The silhouette of the new air traffic control tower looms over the East Valley. The project is on-track to be commissioned in the summer of 2022.
- PMGAA is preparing to expand aircraft parking opportunities at the south end of the airfield. Alpha Apron Phase III will begin construction on October 11th. Phase IV design continues and will be ready for construction once Phase III is complete.
- PMGAA has completed construction of a new remain overnight (RON) pad for four aircraft across the ramp from the north end of the commercial passenger terminal.
- A resolution is included on today's agenda for the Board's consideration to authorize McCarthy Building Companies, Inc. for the Terminal Modernization Construction Manager at Risk (CMAR). This new modern structure will be connected to the main terminal with a concourse to expand the commercial passenger capacity of the Airport. It will be a 5-gate terminal addition replacing the temporary, portable terminal annex building that opened in 2007 when Allegiant Air began scheduled service in Arizona.
- PMGAA is constructing a new cell phone lot at the intersection of Ray and Sossaman Roads. The asphalt pavement is down. Striping of the pavement and lighting are the next steps. Once completed, the current cell phone lot will be repurposed into a new parking lot for terminal tenant employees. This important project will free up revenue spaces currently being used by 150 terminal tenant employees in the Daily Parking Lot.
- PMGAA is embarking on two important projects to improve car rental infrastructure at Gateway Airport. The first undertaking is to update and reconfigure the rental car return lot to improve traffic

flow. This project is under design. The second is to improve the car care facility at the south end of the Airport. This facility is where vehicles are maintained, fueled, washed, and vacuumed in preparation for new customers. These projects are funded by Customer Facility Charge (CFC) funds, a dedicated fee assessed to passengers renting cars at the Airport. The CFC amount is $2.50 per rental day. These funds go into a dedicated account and can only be used to improve the infrastructure and facilities for the rental car operation. Mayor Barney asked if the design would incorporate solar on the shades? CEO O'Neill stated opportunities are being considered for solar as the Authority contemplates the highest and best use of land around the Airport. An opportunity will be entertained when it is financially feasible.

6. **GatewayEast Infrastructure Intergovernmental Agreement Presentation –** Shea Joachim, Business Development Director

The Intergovernmental Agreement (IGA) is included in today's consent agenda for the Board's consideration. This will set forth the roles, responsibilities, and schedule expectations for infrastructure to facilitate the development of the east side of the Airport. The five critical infrastructure projects include a new signalized intersection at Ellsworth Road, the new Williams Field Road alignment, a new box culvert across the Ellsworth channel, the extension of a waterline along Ellsworth Road, a Spine Road alignment study, and the design and construction of a sewer line extension.

7. **Consent Agenda**

a) **Minutes** of the Board Meeting held on **July 20, 2021.**

b) **Resolution No. 21-33** Authorizing the Executive Director to execute an **Intergovernmental Agreement with the City of Mesa** for various infrastructure projects.

c) **Resolution No. 21-34 –** Approving an Authorization of Services with **Kimley-Horn & Associates** for Engineering Design Services for the Design of TWY C New Connectors and Partial Parallel Taxiways in an amount not-to-exceed $250,483 under CIP 1236.

d) **Resolution No. 21-35 –** Authorizing a facility lease with **Trident Military Systems, LLC** for the facility located at 6145 South Kent Street, Mesa AZ 85212. The lease term is two (2) years, commencing on October 1, 2021 with three (3) additional renewal periods of one (1) year each.

e) **Resolution No. 21-36 –** Authorizing the Executive Director to execute an Air Carrier Operating Agreement with **Flair Airlines Ltd**. For commercial air service at the Airport.

f) **Resolution No. 21-37 –** Authorizing the Executive Director to execute an Air Carrier Operating Agreement with **Sun Country, Inc**. for commercial air service at the Airport.

g) **Resolution No. 21-38 –** Adoption of the revised **Airport Rates and Charges** schedule with an effective date of October 1, 2021.

h) **Resolution No. 21-39 –** Authorizing a Facility Lease Agreement with the **Transportation Security Administration** for a portion of the facilities located at 6033-2, 6033-5, and 5803 S. Sossaman Road. The lease term is three (3) years, commencing October 1, 2021, with two (2) additional one-year renewal options.

Mayor Gail Barney moved to approve the Consent Agenda.
Mayor Brigette Peterson seconded the motion.
The motion was carried unanimously.

Consideration and Possible Approval of:

8. **Resolution No. 21-40 –** Authorizing a contract with **McCarthy Building Companies, Inc. (McCarthy**) for Terminal Modernization Construction Manager at Risk (CMAR) Pre-Construction Services, in an amount not to exceed $249,610 under CIP 1201.

   Mayor Giles disclosed a personal interest in Resolution 21-40 and recused himself from discussing or voting on this item.

   Mayor Brigette Peterson moved to approve Resolution No. 21-40.
   Mayor Gail Barney seconded the motion.
   The motion was carried unanimously.

9. **Resolution No. 21-41 –** Authorizing a contract with **SWCA** for Archaeology Data Recovery Mitigation of the Locus 2 Archaeological Site on the east side of the Airport, in an amount not to exceed $142,506 under CIP 1234.

   Mayor Brigette Peterson moved to approve Resolution No. 21-41.
   Mayor Chip Wilson seconded the motion.
   The motion was carried unanimously.

10. **Board Member Comments/Announcements.**

    There were no comments or announcements.

11. **Next Meeting: Tuesday, October 19, 2021** at 9:00 a.m. in the Board Room (Saguaro A&B) of the Gateway Administration Building, 5835 S Sossaman Road, Mesa, Arizona. Members of the Phoenix-Mesa Gateway Airport Authority may attend either in person or by telephone/videoconference.

12. **Adjournment.**
    The meeting adjourned at 9:38 a.m.

Dated this _____ day of _____ 2021.

_____
Misty Johnson, Clerk of the Board

Phoenix-Mesa Gateway Airport Authority
5835 S Sossaman Road
Mesa, Arizona 85212-6014
www.gatewayairport.com

Board Action Item

Re: Resolution 21-42

To:	**Board of Directors**
From:	**Veronica Lewis, Human Resources Director**
Through:	**Chuck Odom, Chief Financial Officer/CFO**
	J. Brian O'Neill, A.A.E., Executive Director/CEO
Subject:	**Employee Benefit Package for Calendar Year 2022**
Date:	**October 19, 2021**

Proposed Motion

Authorize Phoenix-Mesa Gateway Airport Authority's (PMGAA's) insurance broker, USI Insurance Services LLC, to purchase benefit plans (medical, dental, vision, basic life/accidental death & dismemberment, and short-term disability) from various carriers. This consists of a 12-month renewal January 1, 2022 through December 31, 2022 with an estimated plan cost of $1,319,386.

Narrative

PMGAA's benefit broker, USI Insurance Services LLC, received quotes from several industry-leading insurance carriers for a 12-month renewal period. USI negotiated the best possible rate from each carrier resulting in a competitive 3.87% increase in costs for PMGAA. PMGAA staff is proposing that Cigna continue to be the carrier for medical benefits and offer the same two plan coverage options that are currently available.

PMGAA staff proposes that Delta Dental continue to be the carrier for dental and EyeMed continue to be the carrier for vision as there were no changes in premium. It is recommended that Mutual of Omaha be our new carrier for basic life/accidental death & dismemberment and short-term disability as they provided a decrease in premium of 33%. It is recommended that IBH Population continue to be the provider for the Employee Assistance program.

PMGAA has found that providing a competitive benefits package is a major employee retention and attraction tool that reduces the costs – overtime, training, workplace inefficiency – associated with high employee turnover.

Fiscal Impact

Cost of the benefits package for Calendar Year 2022 is estimated to be $1,124,175 (employer's portion) and $198,211 (employee's portion) for a total of $1,319,386. This reflects a 3.87% increase from the previous calendar year.

Attachment(s)

Group Benefits Renewal and Marketing Analysis

RESOLUTION NO. 21-42

WHEREAS, the Phoenix-Mesa Gateway Airport Authority ("Authority"), a joint powers airport authority formed pursuant to Arizona Revised Statute §28-8521 *et seq.* owns and operates the Phoenix-Mesa Gateway Airport ("Airport"); and

WHEREAS the Authority desires to authorize Phoenix-Mesa Gateway Airport Authority's (PMGAA's) insurance broker, **USI Insurance Services LLC**, to purchase benefit plans (medical, dental, vision, basic life/accidental death & dismemberment, and short-term disability) from various carriers. This consists of a 12-month renewal January 1, 2022 through December 31, 2022 with an estimated plan cost of $1,319,386;

NOW, THEREFORE, BE IT RESOLVED by the Board of Directors of the Authority as follows:

> **The Board of Directors of the Authority hereby authorizes Phoenix-Mesa Gateway Airport Authority's (PMGAA's) insurance broker, USI Insurance Services LLC, to purchase benefit plans (medical, dental, vision, basic life/accidental death & dismemberment, and short-term disability) from various carriers. This consists of a 12-month renewal January 1, 2022 through December 31, 2022 with an estimated plan cost of $1,319,386. This resolution also authorizes the Chair or Executive Director/CEO to make such changes as may be approved by the Chair or Executive Director/CEO, necessary to carry out the purposes and intent of this Resolution.**

Passed and adopted by the Authority this 19th day of October, 2021.

_____
John Giles, Chair

ATTEST:

_____
Misty Johnson, Clerk of the Board

APPROVED AS TO FORM:

_____
Jill Casson Owen, Attorney

August 31, 2021

GROUP BENEFITS RENEWAL and MARKETING REVIEW

Phoenix-Mesa Gateway Airport Authority

Jim McCauley, Senior Vice President | Betty Whalley, Account Executive | Terri Garcia, Account Manager

www.usi.com

Disclaimer

The information contained in this report is for general information purposes only. The information is provided by USI Insurance Services and while we endeavour to keep the information up to date and correct, we make no representations or warranties of any kind, express or implied, about the completeness, accuracy, reliability, suitability or availability with respect to the report or the information, products, services, or related graphics contained in the report for any purpose. Any reliance you place on such information is therefore strictly at your own risk.

In no event will we be liable for any loss or damage including without limitation, indirect or consequential loss or damage, or any loss or damage whatsoever arising from loss of data or profits arising out of, or in connection with, the use of this report.

In this report you may view information which is not under the control of USI Insurance Services. We have no control over the nature, content and availability of that information. The inclusion of information does not necessarily imply a recommendation or endorse the views expressed within them.

Commissions and Fees

As a licensed insurance producer, USI is authorized to confer with or advise our clients and prospective clients concerning substantive benefits, terms or conditions of insurance contracts, to sell insurance and to obtain insurance coverages for our clients. Our compensation for placement of insurance coverage, unless otherwise specifically negotiated and agreed to with our client, is customarily based on commission calculated as a percentage of the premium collected by the insurer and is paid to us by the insurer. We may also receive from insurers and insurance intermediaries (which may include USI affiliated companies) additional compensation (monetary and non-monetary) based in whole or in part on the insurance contract we sell, which is contingent on volume of business and/or profitability of insurance contracts we supply to them and/or other factors pursuant to agreements we may have with them relating to all or part of the business we place with those insurers or through those intermediaries. Some of these agreements with insurers and/or intermediaries include financial incentives for USI to grow its business or otherwise strengthen the distribution relationship with the insurer or intermediary. Such agreements may be in effect with one or more of the insurers with whom your insurance is placed, or with the insurance intermediary we use to place your insurance. You may obtain information about the nature and source of such compensation expected to be received by us, and, if applicable, compensation expected to be received on any alternative quotes pertinent to your placement upon your request.

USI values your feedback regarding compliance with our disclosure policy. You may contact the toll-free USI Compliance Hotline (866-657-0861) at any time, and your call will be referred to applicable company management for further investigation.

USI Insurance Services Copyright

The contents of this USI Insurance Services report are protected by applicable copyright laws. No permission is granted to copy, distribute, modify, post or frame any text, graphics, data, content, design or logos.

All information and content in this USI Insurance Services report is subject to applicable statutes and regulations, furnished "as is," without warranty of any kind, express or implied, including but not limited to implied warranties of merchantability, fitness for a particular purpose, or noninfringement.

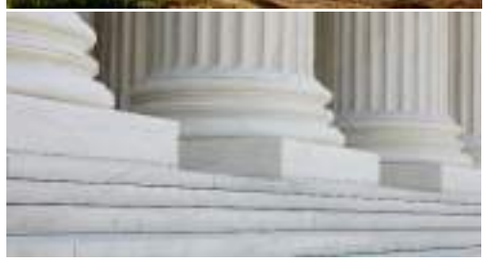

Table of Contents

I	Executive Summary
II	Overall Cost Summary
III	Medical Plan
IV	Dental Plan
V	Vision Plan
VI	Life and Disability Plans Renewal and Marketing Review
VII	Critical Illness Renewal and Mareting Review
VIII	Employee Assistance Program
IX	COBRA and FSA Administration Marketing Review

Executive Summary

Executive Summary
January 1, 2022

USI Insurance Services is pleased to present Phoenix-Mesa Gateway Airport Authority with the renewal and marketing evaluation for the 2022 plan year. The following outlines the strategies and projections for your consideration.

Medical Renewal - Cigna

Initial renewal: 15% increase

Negotiated renewal: 5% increase

For 2021, PMGAA elected to renew with Cigna under a Level Funding contract. This contract provides you with claim information to evaluate how the plan is performing as well as have the opportunity to collect an administrative credit due to favorable claim experience.

There were four (4) individuals who had claims over $20,000 during the plan year.

Congenital Pulmonary Malformation ($156,434) - No longer on the plan
Unilateral Primary Osteoarthritis ($54,120) - Active
Radiculapathy, Cervical ($27,698) - Active
Gastrointestinal Hemorrhage ($25,219) - Active

This renewal also includes the following changes to the program:

- Increase the Specific Stop Loss Level from $40,000 to $45,000
- Enhanced Specialty Pharmacy Program (SavonSP). This program helps lower the cost of specific Specialty Medications (Hepatitis C, Multiple Sclerosis, Psoriasis, Rheumatoid Arthritis, Oncology) to a member responsibility of 30% coinsurance (does not apply to deductible or out-out-pocket). Please note, this is a volutary program for members to enroll in.

Pricing for 4-tier medical rating has also been included within this presentation for your review.

Dental Renewal - Delta Dental

Renewal: 0% increase

Delta Dental's renewal reflects no changes in benefits. Rates are guaranteed to January 1, 2023.

Vision Renewal - EyeMed

Renewal: 0% increase

EyeMed's contract is under a rate guarantee until January 1, 2025. There are no changes in benefits.

Life and Accidental Death & Dismemberment - UNUM

Renewal - 0% Increase

UNUM is presenting their renewal with a 0% increase with no changes in benefits. Rates are guaranteed for 12-months.

Voluntary Life and Accidental Death & Dismemberment - UNUM

Renewal 0% increase

This renewal reflects no change in benefits or rating other than change in age bracket.

Short Term Disability - UNUM

Renewal 0% Increase

UNUM is presenting their renewal with a 0% increase with no changes in benefits. Rates are guaranteed for 12-months.

Life, Disability and Critical Illness Market Evaluation

A request for proposal was submitted to the following carriers and the coverages being proposed.

AFLAC - Quoting Critical Illness
Guardian - Quoting Life/AD&D, Voluntary Life/AD&D, Short Term Disability and Critical Illness
Lincoln Financial - Quoting Life/AD&D, Voluntary Life/AD&D, and Short Term Disability
Mutual of Omaha - Quoting Life/AD&D, Voluntary Life/AD&D, Short Term Disability and Critical Illness
New York Life- Quoting Life/AD&D, Voluntary Life/AD&D, and Short Term Disability
Prudential- Quoting Life/AD&D, Voluntary Life/AD&D, and Short Term Disability
The Standard - Quoting Life/AD&D, Voluntary Life/AD&D, Short Term Disability and Critical Illness
Sun Life - Quoting Critical Illness
United Healthcare - Quoting Life/AD&D, Voluntary Life/AD&D, and Short Term Disability

After review of each proposal, the below outlines the most competitive offerings, by carrier:

1. **Mutual of Omaha**. Quoted Life/AD&D Voluntary Life/ AD&D, STD and Critical Illness. The combined Life and Disability coverages results in a $10,457 savings. They have also closely matched the current level of benefits. The Voluntary Life/AD&D coverage are priced at what is currently being offered. Mutual of Omaha offered a Critical Illness program. Mutual of Omaha's program reflects packaged rating for the Life and Disability coverages. In addition, rates are guaranteed for 3-years.

2. **The Standard**. Quoted Life/AD&D Voluntary Life/ AD&D, STD, and Critical Illness. The combined Life and Disability coverages results in a $7,236 savings. Standard has quoted matching current level of benefits as closely as possible. The Voluntary Life/AD&D coverage are priced matching the current rates. The Standard also offered a Critical Illness program.

3. **Lincoln Financial**. Quoted Life/AD&D Voluntary Life/ AD&D and STD. The combined Life and Disability coverages results in a $6,430 savings matching current level of benefits a closely as possible. Note, the Voluntary Life/AD&D coverage are priced at approximately 3% higher than current. Lincoln Financial is not able to quote Critical Illness coverage.

4. **SunLife**. Quoted Critical Illness. This plan does provide a broad range of covered conditions. Though pricing is higher than the current UNUM plan, SunLife rates reflect date of issuance. This means that the rates do not change as an insured member ages at initial enrollment.

Employee Assistance Program (EAP) - IBH Population Health Solutions

Renewal 28% Increase

In 2020, EAP Preferred was purchased by IGH Population Health Solutions. The increase in cost ($662 annually) does reflect additional services which were not previously provided. These include:

- Online counseling services
- Member portal
- Assistance with School (and College) Selections

COBRA and Flexible Spending Account Administration Marketing Review

As a result of services issues received by the incumbent vendor (BASIC), USI approached the market to receive proposal. Below are those vendors we contacted:

Char Snyder
Employee Benefit Corporation
iSolved
Sterling Benefits (Not competitive)

All vendor pricing is lower than the current. We do recommend that Phoenix-Mesa Gateway Airport Authority conduct short interviews with at least two vendors to ensure you will receive the services you expect.

Thank you for this opportunity to present Phoenix-Mesa Gateway Airport Authority's renewal and market analysis. We value your business and look forward to another successful year.

Overall Cost Summary

Phoenix-Mesa Gateway Airport Authority
Overall Cost Summary - Employer Contributory Coverages
January 1, 2022

12-Month Rating	Cigna (Level Funded)					Cigna (Level Funding)	
Coverage	**Current**	**Renewal**	**%**	**Final Negotiated**	**%**	**Options**	**%**
Medical	$1,109,775	$1,276,241	15.0%	$1,165,273	5.0%	$1,165,273	5.0%
Dental	$57,122	$57,122	0.0%	$57,122	0.0%	$57,122	0.0%
Vision	$10,489	$10,489	0.0%	$10,489	0.0%	$10,489	0.0%
Life and AD&D	$16,904	$16,904	0.0%	$16,904	0.0%	$11,269	-33.3%
Short Term Disability	$16,904	$16,904	0.0%	$16,904	0.0%	$12,082	-28.5%
EAP Services	$2,338	$2,338	0.0%	$3,000	28.3%	$3,000	28.3%
Annual total - All premiums	**$1,213,532**	**$1,379,999**		**$1,269,692**		**$1,256,235**	
$ Change over current		**$166,466**		**$56,159**		**$42,703**	
% Change over current		**13.7%**		**4.6%**		**3.5%**	

Current and Renewal: Cigna Health Care, Delta Dental, EyeMed Vision, UNUM Life/AD&D, UNUM STD, IBH EAP

Renewal Option: Cigna Health Care, Delta Dental, EyeMed Vision, Mutual of Omaha Life/AD&D, Mutual of Omaha STD, IBH EAP

Final rates are subject to actual enrollment, plan design(s) selected and underwriting approval.

This exhibit is intended as a brief comparison of benefits and does not include all benefits, exclusions or limitations. Please refer to SPD or proposal for full details.

Medical Plan

USI

Phoenix-Mesa Gateway Airport Authority
Medical Plan Benefit Outline and Cost Summary
January 1, 2022

Benefit Outline	Cigna Current $500 Ded. PPO	Cigna Current $2800 HDHP	Cigna Negotiated Renewal $500 Ded. PPO	Cigna Negotiated Renewal $2800 HDHP
Deductible (Individual / Family)	$500 / $1,500	$2,800 / $5,400	$500 / $1,500	$2,800 / $5,400
Non-network Deductible (Individual / Family)	$1,000 / $3,000	$5,000 / $10,000	$1,000 / $3,000	$5,000 / $10,000
Deductible Embedded / Non-embedded	Embedded	Embedded	Embedded	Embedded
Out-of-Pocket Max (Individual / Family)	$3,000 / $6,000	$5,000 / $10,000	$3,000 / $6,000	$5,000 / $10,000
Non-network OOP Max (Individual / Family)	$6,000 / $12,000	$10,000 / $20,000	$6,000 / $12,000	$10,000 / $20,000
Coinsurance (In/Out)	80% / %50	80% / 50%	80% / %50	80% / 50%
Wellness / Preventive Care	100%	100%	100%	100%
Cigna Medical Group Primary Care	$0	N/A	$0	N/A
Primary / Specialist Care Office Visit	$25 / $50	80% after ded.	$25 / $50	80% after ded.
Walk-In / Urgent Care Visit	$25 / $75	80% after ded.	$25 / $75	80% after ded.
Emergency Room	$200	80% after ded.	$200	80% after ded.
Outpatient Lab / X-Ray	Office visit copay	80% after ded.	Office visit copay	80% after ded.
Complex Imaging (MRI, CAT, PET, et.al.)	80% after ded.	80% after ded.	80% after ded.	80% after ded.
Outpatient Surgical Facility	80% after ded.	80% after ded.	80% after ded.	80% after ded.
Inpatient Hospital Facility	80% after ded.	80% after ded.	80% after ded.	80% after ded.
Prescription Deductible (Individual / Family)	None	Medical ded.	None	Medical ded.
Retail Prescription Drug Copays	$10 / $35 / $60	Ded. then $10 / $35 / $60	$10 / $35 / $60	Ded. then $10 / $35 / $60
Specialty Prescription Drugs	$60	Ded. then $60	$60	Ded. then $60
Mail Order Prescription Drug Copays	2.5x retail copay	2.5x retail copay	2.5x retail copay	2.5x retail copay

Rates and Premium	3-Tier Rating PPO	3-Tier Rating HDHP				
Employee	31	17	$704.78	$508.39	$749.60	$519.85
Employee + 1 Dependent	7	8	$1,448.13	$1,045.46	$1,540.37	$1,068.90
Employee + 2 or more Deps	16	10	$1,872.89	$1,352.36	$1,991.82	$1,382.81
Total Employees	**54**	**35**				
Annual Total				**$1,109,775**		**$1,165,273**
Change from Current						**$55,498**
Percentage Change						**5%**

Original Renewal: 15%

CONFIDENTIAL | © 2020 USI Insurance Services. All rights reserved.

USI

Phoenix-Mesa Gateway Airport Authority
Medical Plan Benefit Outline and Cost Summary
January 1, 2022

Benefit Outline	Cigna Current $500 Ded. PPO	Cigna Current $2800 HDHP	Cigna Negotiated Renewal - 4 Tier Rating $500 Ded. PPO	Cigna Negotiated Renewal - 4 Tier Rating $2800 HDHP
Deductible (Individual / Family)	$500 / $1,500	$2,800 / $5,400	$500 / $1,500	$2,800 / $5,400
Non-network Deductible (Individual / Family)	$1,000 / $3,000	$5,000 / $10,000	$1,000 / $3,000	$5,000 / $10,000
Deductible Embedded / Non-embedded	Embedded	Embedded	Embedded	Embedded
Out-of-Pocket Max (Individual / Family)	$3,000 / $6,000	$5,000 / $10,000	$3,000 / $6,000	$5,000 / $10,000
Non-network OOP Max (Individual / Family)	$6,000 / $12,000	$10,000 / $20,000	$6,000 / $12,000	$10,000 / $20,000
Coinsurance (In/Out)	80% / %50	80% / 50%	80% / %50	80% / 50%
Wellness / Preventive Care	100%	100%	100%	100%
Cigna Medical Group Primary Care	$0	N/A	$0	N/A
Primary / Specialist Care Office Visit	$25 / $50	80% after ded.	$25 / $50	80% after ded.
Walk-In / Urgent Care Visit	$25 / $75	80% after ded.	$25 / $75	80% after ded.
Emergency Room	$200	80% after ded.	$200	80% after ded.
Outpatient Lab / X-Ray	Office visit copay	80% after ded.	Office visit copay	80% after ded.
Complex Imaging (MRI, CAT, PET, et.al.)	80% after ded.	80% after ded.	80% after ded.	80% after ded.
Outpatient Surgical Facility	80% after ded.	80% after ded.	80% after ded.	80% after ded.
Inpatient Hospital Facility	80% after ded.	80% after ded.	80% after ded.	80% after ded.
Prescription Deductible (Individual / Family)	None	Medical ded.	None	Medical ded.
Retail Prescription Drug Copays	$10 / $35 / $60	Ded. then $10 / $35 / $60	$10 / $35 / $60	Ded. then $10 / $35 / $60
Specialty Prescription Drugs	$60	Ded. then $60	$60	Ded. then $60
Mail Order Prescription Drug Copays	2.5x retail copay	2.5x retail copay	2.5x retail copay	2.5x retail copay

Rates and Premium	3-Tier Rating PPO	3-Tier Rating HDHP			4- Tier Rating	PPO	HDHP		
Employee	31	17	$704.78	$508.39	Employee Only	31	17	$720.89	$500.24
Employee + 1 Dependent	7	8	$1,448.13	$1,045.46	Employee + Spouse	6	6	$1,513.86	$1,050.52
Employee + 2 or more Deps	16	10	$1,872.89	$1,352.36	Employee + Child(ren)	3	2	$1,369.67	$950.45
Total Employees	**54**	**35**			Employee + Full Family	14	10	$2,162.67	$1,494.46
					Total Employees	**54**	**35**		
Annual Total				**$1,109,775**					**$1,169,638**
Change from Current									**$59,863**
Percentage Change									**5%**

Original Renewal: 15%

CONFIDENTIAL | © 2020 USI Insurance Services. All rights reserved.

Dental Plan

Phoenix-Mesa Gateway Airport Authority
Dental Plan Benefit Outline and Cost Summary
January 1, 2022

Benefit Outline		Delta Dental Current		Delta Dental Renewal	
		Network	Non-network	Network	Non-network
Deductible (Individual / Family)		$50 / $150	$50 / $150	$50 / $150	$50 / $150
Waived for Preventive		Yes		Yes	
Annual Maximum		$2,000		$2,000	
Preventive Services		100%	100%	100%	100%
Basic Services		90%*	80%*	90%*	80%*
Major Services		60%*	50%*	60%*	50%*
Non-Network Reimbursements		N/A	90th Percentile	N/A	90th Percentile
Endodontics/Periodontics		Basic		Basic	
Orthodontia		50%		50%	
Eligibility		Adult & Child		Adult & Child	
Lifetime Maximum		$1,000		$1,000	
Waiting Periods (Prev / Basic / Major)		None		None	
Dependent Age Limit		To age 26		To age 26	
Rate Guarantee				To January 1, 2023	
Rates and Premium					
Employee	49	$24.36		$24.36	
Employee + 1 dependent	18	$61.43		$61.43	
Employee + 2 or more dependents	27	$91.14		$91.14	
Total Employees	**94**				
Annual Total		**$57,122**		**$57,122**	
Change from Current				**$0**	
Percentage Change				**0.0%**	

Notes * Deductible applies

CONFIDENTIAL | © 2020 USI Insurance Services. All rights reserved.

Vision Plan

Phoenix-Mesa Gateway Airport Authority
Vision Plan Benefit Outline and Cost Summary
January 1, 2022

Benefit Outline		EyeMed Current	EyeMed Renewal
Exam Copay		$20	$20
Materials Copay		$0	$0
Exam		100% after $20 copay	100% after $20 copay
Lenses			
Single		100%	100%
Bifocal		100%	100%
Trifocal		100%	100%
Lenticular		100%	100%
Frames		Up to $130 allowance; 20% off balance	Up to $130 allowance; 20% off balance
Elective Contacts		Up to $130 allowance; 15% off balance	Up to $130 allowance; 15% off balance
Benefit Frequencies (E/L/F/C)		12 / 12 / 12 / 12	12 / 12 / 12 / 12
Non-network Benefits		Schedule	Schedule
Rate Guarantee			
Rates and Premium	**Current**		
Employee	49	$5.61	$5.61
Employee + 1 Dependent	18	$10.67	$10.67
Employee + 2+ Dependents	26	$15.66	$15.66
Total Employees	**93**		
Annual Total		**$10,489**	**$10,489**
Change from Current			**$0**
Percentage Change			**0%**

CONFIDENTIAL | © 2020 USI Insurance Services. All rights reserved.

Life, Disability and EAP Plans

USI

Phoenix Mesa Gateway Airport Authority
Life / AD&D Plan
Benefit Outline and Cost Summary
January 1, 2022

Benefit Outline	Current	Renewal	Option 1	Option 2	Option 3
Carrier	**Unum**	**Unum**	**Mutual of Omaha**	**Guardian**	**Standard**
Contributory / Non-Contributory	Non-Contributory	Non-Contributory	Non-Contributory	Non-Contributory	Non-Contributory
Eligibility	FTE Working ≥ 30 HPW	FTE Working ≥ 30 HPW	FTE Working ≥ 30 HPW	FTE Working ≥ 30 HPW	FTE Working ≥ 30 HPW
Class 1	Salaries less than $40K	Salaries less than $40K	Salaries less than $40K	Salaries less than $40K	Salaries less than $40K
Class 2	Salaries greater than $40K	Salaries greater than $40K	Salaries greater than $40K	Salaries greater than $40K	Salaries greater than $40K
Class 3	Executive Director	Executive Director	Executive Director	Executive Director	Executive Director
Benefit Amount (Class 1 / 2 / 3)	Flat / 1x Annual Earnings / 2x Annual Earnings	Flat / 1x Annual Earnings / 2x Annual Earnings	Flat / 1x Annual Earnings / 2x Annual Earnings	Flat / 1x Annual Earnings / 2x Annual Earnings	Flat / 1x Annual Earnings / 2x Annual Earnings
Benefit Maximums (Class 1 / 2 / 3)	$40,000 / $150,000 / $410,000	$40,000 / $150,000 / $410,000	$40,000 / $150,000 / $410,000	$40,000 / $150,000 / $410,000	$40,000 / $150,000 / $410,000
Guarantee Issue	Full Benefit Amount	Full Benefit Amount	Full Benefit Amount	Full Benefit Amount	Full Benefit Amt / Full Benefit Amt / $250,000
Benefit Reductions	Reduces To: 65% at Age 70; 50% at Age 75	Reduces To: 65% at Age 70; 50% at Age 75	Reduces To: 65% at Age 70; 50% at Age 75	Reduces To: 65% at Age 70; 50% at Age 75	Reduces To: 65% at Age 70; 50% at Age 75
Waiver of Premium	9 Mo. Elimination Period	9 Mo. Elimination Period	9 Mo. Elimination Period	9 Mo. Elimination Period	6 Mo. Elimination Period
Benefits Extend To	Age 65	Age 65	Age 65	Age 65	Age 65
If Disabled Prior To	Age 60	Age 60	Age 60	Age 60	Age 60
Accelerated Benefits	Included	Included	Included	Included	Included
Life Expectancy	Terminal Condition; <12 Mo.	Terminal Condition; <12 Mo.	Terminal Condition; <12 Mo.	Terminal Condition; <12 Mo.	Terminal Condition; <12 Mo.
Benefit Amount Accessible	100%	100%	80%	75%	75%
Portability	Included	Included	Included	Included	Included
Conversion	Included	Included	Included	Included	Included
Rate Guarantee	1/1/2023	1/1/2023	1/1/2025	1/1/2024	1/1/2024

Volumes, Rates & Total Cost

Number of Employees	102	102	102	102	102
Benefit Volume	$6,708,000	$6,708,000	$6,708,000	$6,708,000	$6,708,000
Life Rate Per $1,000	$0.180	$0.180	$0.110	$0.231	$0.120
AD&D Rate Per $1,000	$0.030	$0.030	$0.030	$0.030	$0.030
Annual Total	**$16,904**	**$16,904**	**$11,269**	**$21,009**	**$12,074**
Change From Current		$0	-$5,635	$4,105	-$4,830
Percentage Change		0.0%	-33.3%	24.3%	-28.6%

CONFIDENTIAL | © 2020 USI Insurance Services. All rights reserved.

USI

Phoenix Mesa Gateway Airpor
Life / AD&D Plan
Benefit Outline and Cost Summ
January 1, 2022

Benefit Outline	Option 4	Option 5	Option 6	Option 7
Carrier	**New York Life**	**UHC**	**Lincoln**	**Prudential**
Contributory / Non-Contributory	Non-Contributory	Non-Contributory	Non-Contributory	Non-Contributory
Eligibility	FTE Working ≥ 30 HPW	FTE Working ≥ 30 HPW	FTE Working ≥ 30 HPW	FTE Working ≥ 30 HPW
Class 1	Salaries less than $40K	Salaries less than $40K	Salaries less than $40K	Salaries less than $40K
Class 2	Salaries greater than $40K	Salaries greater than $40K	Salaries greater than $40K	Salaries greater than $40K
Class 3	Executive Director	Executive Director	Executive Director	Executive Director
Benefit Amount (Class 1 / 2 / 3)	Flat / 1x Annual Earnings / 2x Annual Earnings	Flat / 1x Annual Earnings / 2x Annual Earnings	Flat / 1x Annual Earnings / 2x Annual Earnings	Flat / 1x Annual Earnings / 2x Annual Earnings
Benefit Maximums (Class 1 / 2 / 3)	$40,000 / $150,000 / $350,000	$40,000 / $150,000 / $410,000	$40,000 / $150,000 / $410,000	$40,000 / $150,000 / $410,000
Guarantee Issue	Full Benefit Amount/Full Benefit Amount / $350,000	Full Benefit Amount	Full Benefit Amt / Full Benefit Amt / $310,000	Full Benefit Amount
Benefit Reductions	Reduces To: 65% at Age 70; 50% at Age 75	Reduces To: 65% at Age 70; 50% at Age 75	Reduces To: 65% at Age 70; 50% at Age 75	Reduces To: 65% at Age 70; 50% at Age 75
Waiver of Premium	9 Mo. Elimination Period	9 Mo. Elimination Period	9 Mo. Elimination Period	9 Mo. Elimination Period
Benefits Extend To	Age 65	Age 65	SSNRA	Age 65
If Disabled Prior To	Age 60	Age 60	Age 60	Age 60
Accelerated Benefits	Included	Included	Included	Included
Life Expectancy	Terminal Condition; <12 Mo.	Terminal Condition; <12 Mo.	Terminal Condition; <12 Mo.	Terminal Condition; <12 Mo.
Benefit Amount Accessible	75%	75%	75%	90%
Portability	Included	Included	Included	Included
Conversion	Included	Included	Included	Included
Rate Guarantee	1/1/2024	1/1/2025	1/1/2024	1/1/2025
Volumes, Rates & Total Cost				
Number of Employees	102	102	102	102
Benefit Volume	$6,708,000	$6,708,000	$6,708,000	$6,708,000
Life Rate Per $1,000	$0.145	$0.160	$0.130	$0.162
AD&D Rate Per $1,000	$0.030	$0.020	$0.030	$0.030
Annual Total	**$14,087**	**$14,489**	**$12,879**	**$15,455**
Change From Current	-$2,817	-$2,415	-$4,025	-$1,449
Percentage Change	-16.7%	-14.3%	-23.8%	-8.6%

CONFIDENTIAL | © 2020 USI Insurance Services. All rights reserved.

USI

Phoenix Mesa Gateway Airport Authority
Voluntary Life / AD&D Plan
Benefit Outline and Cost Summary
January 1, 2022

Benefit Outline	Current	Renewal	Option 1	Option 2
Carrier	**Unum**	**Unum**	**Mutual of Omaha**	**Guardian**
Definition of Earnings	Base Salary Only	Base Salary Only	Base Salary Only	Base Salary Only
Eligibility	FTE Working ≥ 30 HPW	FTE Working ≥ 30 HPW	FTE Working ≥ 30 HPW	FTE Working ≥ 30 HPW
Child Age Requirement	Live Birth to Age 19, 26 FTS	Live Birth to Age 19, 26 FTS	14 Days to Age 26	Live Birth to Age 23, 25 FTS
Benefit Increments				
Employee	$10,000	$10,000	$10,000	$10,000
Spouse	$5,000	$5,000	$5,000	$5,000
Children	$2,000	$2,000	$2,000	$1,000
Benefit Maximums				
Employee	5x Salary to $500,000	5x Salary to $500,000	5x Salary to $500,000	$500,000
Spouse	100% of EE Amt to $100,000	100% of EE Amt to $100,000	100% of EE Amt to $100,000	100% of EE Amt to $100,000
Children	Live Birth to 6 Months: $1,000; 6 Months to Age 19, 26 FTS: $10,000	Live Birth to 6 Months: $1,000; 6 Months to Age 19, 26 FTS: $10,000	$10,000	Live Birth to 14 Days: $1,000 14 Days to Age 23, 25 FTS: $10,000
Guarantee Issue				
Employee	$100,000	$100,000	$100,000	$100,000
Spouse	$25,000	$25,000	$25,000	$25,000
Children	Full Benefit Amount	Full Benefit Amount	Full Benefit Amount	Full Benefit Amount
Benefit Reductions	Reduces To: 65% at Age 70; 50% at Age 75	Reduces To: 65% at Age 70; 50% at Age 75	Reduces To: 65% at Age 70; 50% at Age 75	Reduces To: 65% at Age 70; 50% at Age 75
Waiver of Premium	9 Mo. Elimination Period	9 Mo. Elimination Period	9 Mo. Elimination Period	9 Mo. Elimination Period
Benefits Extend to Age	Age 65	Age 65	Age 65	Age 65
If Disabled Prior to	Age 60	Age 60	Age 60	Age 60
Portability	Included	Included	Included	Included
Conversion	Not Included	Not Included	Included	Included
Participation (Req. / Actual)	Current Levels	Current Levels	53% (Current)	50%
Rate Guarantee	1/1/2022	1/1/2023	1/1/2025	1/1/2024

CONFIDENTIAL | © 2020 USI Insurance Services. All rights reserved.

Phoenix Mesa Gateway Airport Authority
Voluntary Life / AD&D Plan
Benefit Outline and Cost Summary
January 1, 2022

Benefit Outline	Current	Renewal	Option 1	Option 2
Carrier	Unum	Unum	Mutual of Omaha	Guardian
Life Per $1,000	**Employee / Spouse**	**Employee / Spouse**	**Employee / Spouse**	**Employee / Spouse**
Under Age 25	$0.090	$0.090	$0.090	$0.090
25-29	$0.090	$0.090	$0.090	$0.090
30-34	$0.090	$0.090	$0.090	$0.090
35-39	$0.120	$0.120	$0.120	$0.120
40-44	$0.180	$0.180	$0.180	$0.180
45-49	$0.300	$0.300	$0.300	$0.300
50-54	$0.480	$0.480	$0.480	$0.480
55-59	$0.800	$0.800	$0.800	$0.800
60-64	$0.990	$0.990	$0.990	$0.990
65-69	$1.470	$1.470	$1.470	$1.470
70-74	$2.840 / N/A	$2.840 / NA	$2.840 / N/A	$2.840 / NA
75-99	$2.840 / N/A	$2.840 / NA	$2.840 / N/A	$2.840 / NA
Child Life	$0.245	$0.245	$0.245	$0.245
AD&D Per $1,000				
EE / SP AD&D	$0.030	$0.030	$0.030	$0.030
Child AD&D	$0.030	$0.030	$0.030	$0.030

Notes

CONFIDENTIAL | © 2020 USI Insurance Services. All rights reserved.

USI

Phoenix Mesa Gateway A
Voluntary Life / AD&D Plan
Benefit Outline and Cost S
January 1, 2022

Benefit Outline	Option 3	Option 4	Option 5	Option 6	Option 7
Carrier	**Standard**	**New York Life**	**UHC**	**Lincoln**	**Prudential**
Definition of Earnings	Base Salary Only	Base Salary Only	Base Salary Only	Base Salary Only	Base Salary Only
Eligibility	FTE Working ≥ 30 HPW	FTE Working ≥ 30 HPW	FTE Working ≥ 30 HPW	FTE Working ≥ 30 HPW	FTE Working ≥ 30 HPW
Child Age Requirement	Live Birth to Age 26	Birth to Age 26	Live Birth to Age 26	Live Birth to Age 26	Birth to Age 26
Benefit Increments					
Employee	$10,000	$10,000	$10,000	$10,000	$10,000
Spouse	$5,000	$5,000	$5,000	$5,000	$5,000
Children	$2,000	$2,000	$2,000	$1,000	Flat
Benefit Maximums					
Employee	$500,000	5x Salary to $500,000	5x Salary to $500,000	5x Salary to $500,000	$500,000
Spouse	100% of EE Amt to $100,000	50% of EE Amt to $100,000	100% of EE Amt to $500,000	100% of EE Amt to $100,000	100% of EE Amt to $100,000
Children	$10,000	Birth to 6 Months: $500 6 Months to Age 26: $10,000	Live Birth to 6 Months: $1,000 6 Months to Age 26: $10,000	Live Birth to 6 Months: $1,000 6 Months to Age 26: $10,000	$10,000
Guarantee Issue					
Employee	$100,000	$100,000	$100,000	$150,000	$100,000
Spouse	$25,000	$25,000	$25,000	$30,000	$25,000
Children	Full Benefit Amount	Full Benefit Amount	Full Benefit Amount	Full Benefit Amount	Full Benefit Amount
Benefit Reductions	Reduces To: 65% at Age 70; 50% at Age 75	Reduces To: 65% at Age 65; 50% at Age 70	Reduces To: 65% at Age 70; 50% at Age 75	Reduces To: 65% at Age 70; 50% at Age 75	Reduces To: 65% at Age 70; 50% at Age 75
Waiver of Premium	6 Mo. Elimination Period	9 Mo. Elimination Period	9 Mo. Elimination Period	9 Mo. Elimination Period	9 Mo. Elimination Period
Benefits Extend to Age	Age 65	Age 65	Age 65	SSNRA	Age 65
If Disabled Prior to	Age 60	Age 60	Age 60	Age 60	Age 60
Portability	Included	Included	Included	Included	Included
Conversion	Included	Included	Included	Included	Not Included
Participation (Req. / Actual)	20%	20%	20%	50%	20%
Rate Guarantee	1/1/2024	1/1/2024	1/1/2025	1/1/2024	1/1/2025

CONFIDENTIAL | © 2020 USI Insurance Services. All rights reserved.

USI

Phoenix Mesa Gateway A
Voluntary Life / AD&D Plan
Benefit Outline and Cost S
January 1, 2022

Benefit Outline	Option 3	Option 4	Option 5	Option 6	Option 7
Carrier	Standard	New York Life	UHC	Lincoln	Prudential
Life Per $1,000	**Employee / Spouse**	**Employee / Spouse**	**Employee / Spouse**	**Employee / Spouse**	**Employee / Spouse**
Under Age 25	$0.090	$0.090	$0.090	$0.120	$0.090
25-29	$0.090	$0.090	$0.090	$0.120	$0.090
30-34	$0.090	$0.090	$0.090	$0.120	$0.090
35-39	$0.120	$0.120	$0.120	$0.150	$0.120
40-44	$0.180	$0.180	$0.180	$0.210	$0.180
45-49	$0.300	$0.300	$0.300	$0.330	$0.300
50-54	$0.480	$0.480	$0.480	$0.510	$0.480
55-59	$0.800	$0.800	$0.800	$0.830	$0.800
60-64	$0.990	$0.990	$0.990	$1.020	$0.990
65-69	$1.470	$1.470	$1.470	$1.500	$1.470
70-74	$2.840 / NA	$2.840 / NA	$2.840 / NA	$2.87 / NA	$2.840 / NA
75-99	$2.840 / NA	$2.840 / NA	$2.840 / NA	$2.87 / NA	$2.840 / NA
Child Life	$0.200	$0.245	$0.245	$0.275	$0.245
AD&D Per $1,000					
EE / SP AD&D	$0.030	$0.030	$0.030	$0.030	$0.030
Child AD&D	$0.030	$0.030	$0.030	N/A	$0.030

Notes

CONFIDENTIAL | © 2020 USI Insurance Services. All rights reserved.

USI

Phoenix Mesa Gateway Airport Authority
Short Term Disability Plan
Benefit Outline and Cost Summary
January 1, 2022

Benefit Outline	Current	Renewal	Option 1	Option 2	Option 3
Carrier	Unum	Unum	Mutual of Omaha	Guardian	Standard
Definition of Earnings	Base Salary Only	Base Salary Only	Base Salary Only	Base Salary Only	Base Salary Only
Contributory / Non-Contributory	Non-Contributory	Non-Contributory	Non-Contributory	Non-Contributory	Non-Contributory
Eligibility	FTE Working ≥ 30 HPW	FTE Working ≥ 30 HPW	FTE Working ≥ 30 HPW	FTE Working ≥ 30 HPW	FTE Working ≥ 30 HPW
Elimination Period					
Accident	30 Days	30 Days	30 Days	30 Days	30 Days
Sickness	30 Days	30 Days	30 Days	30 Days	30 Days
Benefit Percentage	60%	60%	60%	60%	60%
Maximum Weekly Benefit	$1,000	$1,000	$1,000	$1,000	$1,000
Definition of Disability	Duties AND Earnings	Duties AND Earnings	Duties AND Earnings	Duties AND Earnings	Duties AND Earnings
Benefit Duration includes Elimation Period	26 Weeks	26 Weeks	26 Weeks	26 Weeks	26 Weeks
Pre-Existing Conditions Exclusion	Not Included	Not Included	Not Included	Not Included	Not Included
Rate Guarantee	1/1/2022	1/1/2023	1/1/2025	1/1/2024	1/1/2024

Volumes, Rates & Total Cost

Number of Employees	102	102	102	102	102
Benefit Volume	$67,122.00	$67,122.00	$67,122.00	$67,122.00	$67,122.00
STD Rate Per $10	$0.210	$0.210	$0.150	$0.200	$0.180
Annual Total	**$16,915**	**$16,915**	**$12,082**	**$16,109**	**$14,498**
Change From Current		$0	-$4,833	-$805	-$2,416
Percentage Change		0.0%	-28.6%	-4.8%	-14.3%

Notes

CONFIDENTIAL | © 2020 USI Insurance Services. All rights reserved.

USI

Phoenix Mesa Gateway Airport Aut
Short Term Disability Plan
Benefit Outline and Cost Summary
January 1, 2022

Benefit Outline	Option 4	Option 5	Option 6	Option 7
Carrier	New York Life	UHC	Lincoln	Prudential
Definition of Earnings	Base Salary Only	Base + Commissions	Base Salary Only	Base Salary Only
Contributory / Non-Contributory	Non-Contributory	Non-Contributory	Non-Contributory	Non-Contributory
Eligibility	FTE Working ≥ 30 HPW	FTE Working ≥ 30 HPW	FTE Working ≥ 30 HPW	FTE Working ≥ 30 HPW
Elimination Period				
Accident	30 Days	30 Days	30 Days	30 Days
Sickness	30 Days	30 Days	30 Days	30 Days
Benefit Percentage	60%	60%	60%	60%
Maximum Weekly Benefit	$1,000	$1,000	$1,000	$1,000
Definition of Disability	Duties AND Earnings	Duties AND Earnings	Duties AND Earnings	Duties AND Earnings
Benefit Duration includes Elimation Period	26 Weeks	26 Weeks	26 Weeks	26 Weeks
Pre-Existing Conditions Exclusion	Not Included	Not Included	Not Included	Not Included
Rate Guarantee	1/1/2024	1/1/2024	1/1/2024	1/1/2024

Volumes, Rates & Total Cost				
Number of Employees	102	102	102	102
Benefit Volume	$67,122.00	$67,122.00	$67,122.00	67,122
STD Rate Per $10	$0.160	$0.180	$0.190	$0.158
Annual Total	**$12,887**	**$14,498**	**$15,304**	**$12,726**
Change From Current	-$4,027	-$2,416	-$1,611	-$4,188
Percentage Change	-23.8%	-14.3%	-9.5%	-24.8%

Notes

CONFIDENTIAL | © 2020 USI Insurance Services. All rights reserved.

Phoenix-Mesa Gateway Airport Authority
Voluntary Critical Illness
Benefit Outline and Cost Summary
January 1, 2022

Benefit Outline	UNUM - Current Proposed Plan	
	UNUM - Traditional Enrollment	
Eligibility	All active FTE's working ≥ 30 hpw	
Covered Conditions	**1st Occurrence**	**2nd Occurrence**
Cancer		
Invasive Cancer	100%	100%
Carcinoma in Situ	25%	25%
Benign Brain Tumor	100%	100%
Skin Cancer	$500	$500
Vascular		
Heart Attack	100%	100%
Stroke	100%	100%
Heart Failure	100%	100%
Coronary Arteriosclerosis	50%	50%
Other		
Organ Failure	100%	100%
Kidney Failure	100%	100%
Wellness Benefit	$50 per year payment for wellnes screenings	
Dependent Age Limit	0 days old to 26 years old	
Pre-Existing Conditions	12 / 12	
Benefit Increments	Employee: $10,000 | Spouse: 50%	
Guarantee Issue	Employee: $20,000 | Spouse: 50%	
Benefit Separation Period	3 months	
Participation (Required)	10 enrolled or 5%, the greater of	
Rate Guarantee	To January 1, 2024	

UNUM - Current Renewal Rates

Monthly Premium

Employee						
Benefit Amount	< 25	25-29	30-34	35-39	40-44	45-49
$10,000	$3.08	$3.68	$4.48	$5.38	$7.28	$10.18
$20,000	$4.28	$5.48	$7.08	$8.88	$12.68	$18.48
	50-54	55-59	60-64	65-69	70-74	75-79
$10,000	$14.78	$20.48	$29.38	$43.08	$64.28	$89.78
$20,000	$27.68	$39.08	$56.88	$84.28	$126.68	$177.68
	80-84	85+				
$10,000	$123.68	$194.18				
$20,000	$245.48	$386.48				

Spouse						
Benefit Amount	< 25	25-29	30-34	35-39	40-44	45-49
$5,000	$2.48	$2.78	$3.18	$3.63	$4.58	$6.03
$10,000	$3.08	$3.68	$4.48	$5.38	$7.28	$10.18
	50-54	55-59	60-64	65-69	70-74	75-79
$5,000	$8.33	$11.18	$15.63	$22.48	$33.08	$45.83
$10,000	$14.78	$20.48	$29.38	$43.08	$64.28	$89.78
	80-84	85+				
$5,000	$62.78	$98.03				
$10,000	$123.68	$194.18				

CONFIDENTIAL | © 2020 USI Insurance Services. All rights reserved.

Phoenix-Mesa Gateway Airp
Voluntary Critical Illness
Benefit Outline and Cost Sum
January 1, 2022

Benefit Outline	Mutual of Omaha Proposed Plan	
Eligibility	All active FTE's working ≥ 30 hpw	
Covered Conditions	**1st Occurance**	**2nd Occurance**
Cancer		
Invasive Cancer	100%	100%
Carcinoma in Situ	25%	25%
Benign Brain Tumor	25%	25%
Skin Cancer	Not Covered	Not Covered
Vascular		
Heart Attack	100%	100%
Stroke	100%	100%
Heart Failure	100%	100%
Coronary Arteriosclerosis	25%	25%
Other		
Organ Failure	100%	100%
Kidney Failure	100%	100%
Wellness Benefit	$50 per year payment for wellnes screenings	
Dependent Age Limit	0 days old to 26 years old	
Pre-Existing Conditions	12/12	
Benefit Increments	Employee: $10,000 | Spouse: $5,000 | CH: 25% of EE	
Guarantee Issue	Employee: $20,000 | Spouse: $10,000 | CH: 25% of EE	
Benefit Separation Period	3 months	
Participation (Required)	19% of eligible employees	
Rate Guarantee	To January 1, 2025	

Mutual of Omaha Proposed Rates

Monthly Premium

Employee and Spouse (based on employee age)

Benefit Amount	<25	25-29	30-34	35-39	40-44	45-49
Rates per $1,000	$0.35	$0.42	$0.53	$0.66	$0.91	$1.30
$5,000	$1.75	$2.10	$2.65	$3.30	$4.55	$6.50
$10,000	$3.50	$4.20	$5.30	$6.60	$9.10	$13.00
$20,000	$7.00	$8.40	$10.60	$13.20	$18.20	$26.00

Benefit Amount	50-54	55-59	60-64	65-69	70-74	75-79
Rates per $1,000	$1.92	$2.69	$3.88	$5.72	$8.57	$12.01
$5,000	$9.60	$13.45	$19.40	$28.60	$42.85	$60.05
$10,000	$19.20	$26.90	$38.80	$57.20	$85.70	$120.10
$20,000	$38.40	$53.80	$77.60	$114.40	$171.40	$240.20

Benefit Amount	80-99
Rates per $1,000	$16.58
$5,000	$82.90
$10,000	$165.80
$20,000	$331.60

CONFIDENTIAL | © 2020 USI Insurance Services. All rights reserved.

USI

Phoenix-Mesa Gateway Airp
Voluntary Critical Illness
Benefit Outline and Cost Sum
January 1, 2022

Benefit Outline	Guardian Proposed Plan	
Eligibility	All active FTE's working ≥ 30 hpw	
Covered Conditions	**1st Occurance**	**2nd Occurance**
Cancer		
Invasive Cancer	100%	100%
Carcinoma in Situ	30%	0%
Benign Brain Tumor	75%	0%
Skin Cancer	$250	$0
Vascular		
Heart Attack	100%	50%
Stroke	100%	50%
Heart Failure	100%	50%
Coronary Arteriosclerosis	30%	0%
Other		
Organ Failure	100%	50%
Kidney Failure	100%	50%
Wellness Benefit	$50 per year payment for wellnes screenings	
Dependent Age Limit	0 days old to 26 years old	
Pre-Existing Conditions	3/12	
Benefit Increments	Employee: $10,000 | Spouse: $5,000 | CH: 25% of EE	
Guarantee Issue	Employee: $20,000 | Spouse: $10,000 | CH: 25% of EE	
Benefit Separation Period	3 months	
Participation (Required)	15% of eligible employees	
Rate Guarantee	To January 1, 2024	

Guardian Proposed Rates

Monthly Rates

Employee

	< 30	30-39	40-49	50-59	60-69	70+
$10,000	$5.40	$6.70	$13.10	$27.00	$38.90	$57.30
$20,000	$10.80	$13.40	$26.20	$54.00	$77.80	$114.60

Spouse

	< 30	30-39	40-49	50-59	60-69	70+
$5,000	$1.55	$2.15	$3.75	$7.20	$10.20	$14.80
$10,000	$3.10	$4.30	$7.50	$14.40	$20.40	$29.60

Children: Incuded in employee cost

CONFIDENTIAL | © 2020 USI Insurance Services. All rights reserved.

USI

Phoenix-Mesa Gateway Airp
Voluntary Critical Illness
Benefit Outline and Cost Sum
January 1, 2022

Benefit Outline	The Standard Proposed Plan	
Eligibility	All active FTE's working ≥ 30 hpw	
Covered Conditions	**1st Occurance**	**2nd Occurance**
Cancer		
Invasive Cancer	100%	100%
Carcinoma in Situ	25%	25%
Benign Brain Tumor	Not covered	Not covered
Skin Cancer	100%	100%
Vascular		
Heart Attack	100%	100%
Stroke	Not covered	Not covered
Heart Failure	100%	100%
Coronary Arteriosclerosis	100%	100%
Other		
Organ Failure	100%	100%
Kidney Failure	100%	100%
Wellness Benefit	$25 per year payment for wellnes screenings	
Dependent Age Limit	0 days old to 26 years old	
Pre-Existing Conditions	12 / 12	
Benefit Increments	Employee: $10,000 | Spouse: $5,000 | CH: 50% of EE	
Guarantee Issue	Employee: $20,000 | Spouse: $10,000 | CH: 50% of EE	
Benefit Separation Period	0 months	
Participation (Required)	20% of eligible employees	
Rate Guarantee	To January 1, 2024	

Standard Proposed Rates

Monthly Rates

Employee and Spouse (based on employee age) - Non Tobacco

	<30	30-39	40-49	50-59	60-69	70+
$5,000	$2.15	$3.75	$6.90	$11.45	$19.15	$32.85
$10,000	$4.30	$7.50	$13.80	$22.90	$38.30	$65.70
$15,000	$6.45	$11.25	$20.70	$34.35	$57.45	$98.55
$20,000	$8.60	$15.00	$27.60	$45.80	$76.60	$131.40

Employee and Spouse (based on employee age) - Tobacco

	<30	30-39	40-49	50-59	60-69	70+
$5,000	$2.70	$5.50	$12.00	$22.90	$42.30	$68.95
$10,000	$5.40	$11.00	$24.00	$45.80	$84.60	$137.90
$15,000	$8.10	$16.50	$36.00	$68.70	$126.90	$206.85
$20,000	$10.80	$22.00	$48.00	$91.60	$169.20	$275.80

Child(ren): Included in employee premium

CONFIDENTIAL | © 2020 USI Insurance Services. All rights reserved.

Phoenix-Mesa Gateway Airp
Voluntary Critical Illness
Benefit Outline and Cost Sum
January 1, 2022

Benefit Outline	SunLife Proposed Plan	
Eligibility	All active FTE's working ≥ 30 hpw	
Covered Conditions	**1st Occurance**	**2nd Occurance**
Cancer		
Invasive Cancer	100%	100%
Carcinoma in Situ	100%	100%
Benign Brain Tumor	100%	100%
Skin Cancer	5%	5%
Vascular		
Heart Attack	100%	100%
Stroke	100%	100%
Heart Failure	100%	100%
Coronary Arteriosclerosis	25%	25%
Other		
Organ Failure	100%	100%
Kidney Failure	100%	100%
Wellness Benefit	$50 per calendar year **(Addtl Charge of $1.25/month)**	
Dependent Age Limit	0 days old to 26 years old	
Pre-Existing Conditions	12 / 12	
Benefit Increments	oyee: $10,000 | Spouse: $10,000 | CH: 50%	
Guarantee Issue	oyee: $40,000 | Spouse: $40,000 | CH: 50%	
Benefit Separation Period	6 months	
Participation (Required)	15%	
Rate Guarantee	To January 1, 2025	

SunLife Proposed Rates

Monthly Rates *

Employee and Spouse (based on employee age) - Non Tobacco

	<25	25-29	30-34	35-39	40-44	45-49	50-54	55-59	60-64	65-69	70-74	75+
	$0.53	$0.59	$0.75	$1.02	$1.44	$2.00	$2.75	$3.48	$4.19	$5.19	$6.97	$9.50
$10,000	$5.30	$5.90	$7.50	$10.20	$14.40	$20.00	$27.50	$34.80	$41.90	$51.90	$69.70	$95.00
$20,000	$10.60	$11.80	$15.00	$20.40	$28.80	$40.00	$55.00	$69.60	$83.80	$103.80	$139.40	$190.00
$30,000	$15.90	$17.70	$22.50	$30.60	$43.20	$60.00	$82.50	$104.40	$125.70	$155.70	$209.10	$285.00
$40,000	$21.20	$23.60	$30.00	$40.80	$57.60	$80.00	$110.00	$139.20	$167.60	$207.60	$278.80	$380.00

Employee and Spouse (based on employee age) - Tobacco

	<25	25-29	30-34	35-39	40-44	45-49	50-54	55-59	60-64	65-69	70-74	75+
	$0.55	$0.64	$0.86	$1.29	$2.03	$3.11	$4.64	$6.25	$7.90	$10.14	$13.09	$16.02
$10,000	$5.50	$6.40	$8.60	$12.90	$20.30	$31.10	$46.40	$62.50	$79.00	$101.40	$130.90	$160.20
$20,000	$11.00	$12.80	$17.20	$25.80	$40.60	$62.20	$92.80	$125.00	$158.00	$202.80	$261.80	$320.40
$30,000	$16.50	$19.20	$25.80	$38.70	$60.90	$93.30	$139.20	$187.50	$237.00	$304.20	$392.70	$480.60
$40,000	$22.00	$25.60	$34.40	$51.60	$81.20	$124.40	$185.60	$250.00	$316.00	$405.60	$523.60	$640.80

Child(ren): $0.12/$1,000 per month

*Issue age rating applies - premiums will not increase due to age increases.

** The employee's age is used to determine rates.

***Rates are based on spouse's tobacco use.

CONFIDENTIAL | © 2020 USI Insurance Services. All rights reserved.

Phoenix-Mesa Gateway Airp
Voluntary Critical Illness
Benefit Outline and Cost Sum
January 1, 2022

Benefit Outline	AFLAC Proposed Plan	
Eligibility	All active FTE's working ≥ 30 hpw	
Covered Conditions	**1st Occurance**	**2nd Occurance**
Cancer		
Invasive Cancer	100%	100% (must be treatment free)
Carcinoma in Situ	100%	100% (must be treatment free)
Benign Brain Tumor	100%	100% (must be treatment free)
Skin Cancer	$250 per cal. Year	$250 per cal. Year
Vascular		
Heart Attack	100%	100%
Stroke	100%	100%
Heart Failure	25%	25%
Coronary Arteriosclerosis	25%	25%
Other		
Organ Failure	100% (25% if on transplant list)	100% (25% if on transplant list)
Kidney Failure	100%	100%
Wellness Benefit	$50 per calendar year	
Dependent Age Limit	0 days old to 26 years old	
Pre-Existing Conditions	12 / 12	
Benefit Increments	Employee: $10,000 | Spouse: $10,000 | CH: 50% of EE	
Guarantee Issue	Employee: $30,000 | Spouse: $30,000 | CH: 50% of EE	
Benefit Separation Period	1 month	
Participation (Required)	0% of eligible employees	
Rate Guarantee	To January 1, 2024	

AFLAC Proposed Rates

Monthly Rates

Employee Rates

	18-25	26-30	31-35	36-40	41-45	46-50
$10,000	$5.76	$7.22	$8.31	$10.51	$12.40	$14.55
$20,000	$9.99	$12.93	$15.10	$19.51	$23.28	$27.58
$30,000	$14.23	$18.63	$21.89	$28.50	$34.16	$40.61

Employee Rates

	51-55	56-60	61-65	66+
$10,000	$21.99	$21.69	$43.08	$74.72
$20,000	$42.46	$41.86	$84.63	$147.92
$30,000	$62.93	$62.03	$126.19	$221.12

Child cost is included with employee election. Benefit is 50% of employee amount.

CONFIDENTIAL | © 2020 USI Insurance Services. All rights reserved.

Phoenix-Mesa Gateway Airport Authority
Employee Assistance Program
Benefit Outline and Cost Summary
January 1, 2022

Benefit Outline	Current	Renewal
Carrier	IBH Population Health Solutions (Formerly EAP Preferred)	IBH Population Health Solutions
Number of Counseling Visits	6	6
Available to dependents	Yes	Yes
Telephonic Counseling	Included	Included
Online Counseling	Not Included	Included
Child Care Consultation	Included	Included
Elder Care Consultation	Included	Included
Financial Consultation	Included	Included
Legal Consultation	Included	Included
School Selection Assistance/College Assistance	Not Included	Included
Online Member Portal	Not Included	Included
Employee | Supervisor Training	Included	Included
Rate Guarantee	To January 1, 2022	To January 1, 2023
Rates & Total Cost		
Number of Employees	102	102
PEPM Fee	$1.91	N/A
Quarterly Fee	N/A	$750.00
Annual Total	$2,338	$3,000
Change from Current	$0	$662
Percentage Change	0.0%	28.3%

COBRA Administration | FSA Administration

Phoenix Mesa-Gateway Airport Authority
COBRA Administration
Benefit Outline and Cost Summary
January 1, 2022

Benefit Outline	Current	Renewal	Option 1	Option 2	Option 3
Administrator	BASIC	BASIC	Chard Schnyder	EB Solutions	iSolved
New Hire / Initial Notices	Not Included	Not Included	Not Included	Not Included	Not Included
Qualifying Event Notices	Included	Included	Included	Included	Included
Open Enrollment Notification Packet	Not Included	Not Included	Per Notice Fee	Not Included	Not Included
Premium Payments Remitted To	Employer	Employer	Employer	Employer	Employer
2% COBRA Admin Fee Retained By	Administrator	Administrator	Administrator	Administrator	Administrator
Rate Guarantee		To January 1, 2023	To January 1, 2025	To January 1, 2023	To January 1, 2023

Rates & Total Cost

Eligible Employees	108	108	108	108	108
Number of COBRA Participant Families	0	0	0	0	0
Set-Up Fee	N/A	N/A	Waived	Waived	Waived
Renewal or Annual Fee	$0	$0	Waived	Waived	Included in Fee
Per Employee Monthly Fee	**$0.80**	**$0.80**	**$0.60**	**$0.72**	**$0.55**
Per COBRA Participant Monthly Fee	N/A	N/A	N/A	N/A	N/A
Per Notice Fee	N/A	N/A	N/A	N/A	N/A
Minimum Monthly Fee	$50	$50	$100	$60	N/A
Monthly Total	**$86**	**$86**	**$100**	**$78**	**$59**
Annual Total	**$1,037**	**$1,037**	**$1,200**	**$933**	**$713**
Change from Current		$0	$163	-$104	-$324
Percentage Change		0%	16%	-10%	-31%

Notes

1. COBRA Services is a value added service provided by USI Insurance Services

Phoenix Mesa-Gateway Airport Authority
Flexible Spending Account
Benefit Outline and Cost Summary
January 1, 2022

Benefit Outline		Current	Renewal	Option 1	Option 2	Option 3
Administrator		BASIC	BASIC	Char Snyder	EB Solutions	iSolved
Annual Contribution Maximum						
Section 125 Health Care	9	$2,750	$2,750	$2,750	$2,750	$2,750
Section 129 Dependent Care	0	$5,000	$5,000	$5,000	$5,000	$5,000
Reimbursement Method		Direct Deposit, Payroll	Direct Deposit, Payroll	Direct Deposit, Payroll	Direct Deposit, Payroll	Direct Deposit, Payroll
Web Based Administration		Included	Included	Included	Included	Included
Preparation of Plan Document & SPD		Included	Included	Speciman SPD Provided	Not Included	Not Included
IRS Form 5500 Preparation		Not Included	Not Included	Not Included	Not Included	Not Included
Discrimination Testing		Included	Included	Included	Included	Included
Rate Guarantee			To January 1, 2023	To January 1, 2025	To January 1, 2023	To January 1, 2023

Fees & Total Cost

Per Participant/Account Per Month Fee	$5.25	$5.25	$4.25	$4.10	$4.00
Number of Participants	9	9	9	9	9
Debit Card Fee	Included above	Included above	Included above	Included above	Included above
Set-Up Fee	N/A	N/A	Waived	Waived	Waived
Renewal or Annual Fee	$750	$750	Waived	Waived	Waived
Minimum Monthly Fee			$100	$60	$60
Total Monthly Cost	**$47.25**	**$47.25**	**$100**	**$60**	**$60**
Total Annual Cost	**$1,317**	**$1,317**	**$1,200**	**$720**	**$720**
Change from Current		$0	-$117	-$597	-$597
Percentage Change		0.0%	-8.9%	-45.3%	-45.3%

Notes

Phoenix-Mesa Gateway Airport Authority
5835 S Sossaman Road
Mesa, Arizona 85212-6014
www.gatewayairport.com

Board Action Item

Re: Resolution 21-43

To: Board of Directors
From: Shea Joachim, CEcD, Business Development Director
Through: J. Brian O'Neill, A.A.E., Executive Director/CEO
Subject: Enterprise - Third Amendment to Car Rental Concession Agreement
Date: October 19, 2021

Proposed Motion
To authorize the Third Amendment to the Car Rental Concession Agreement with Enterprise Leasing Company of Phoenix, LLC.

Narrative
Enterprise Leasing Company of Phoenix, LLC ("Enterprise") has operated the Enterprise Rent-A-Car, Alamo Rent-A-Car, and National Car Rental brands at Phoenix Mesa Gateway Airport under the current Car Rental Concession Agreement ("Agreement") since December 2013. The Agreement Initial Term was five (5) years, and the Agreement has three (3) additional one-year Renewal Terms. Enterprise has executed all three of the Renewal Terms and the Agreement is set to terminate on November 30, 2021.

The Airport intends to conduct a competitive solicitation to award new Car Rental Concession Agreements. However, the Airport believes the business climate has not been advantageous for the Airport to conduct a competitive solicitation. In addition, the Airport has identified some critical improvements to the facilities that support car rental operations. As such, Airport staff is recommending an additional eighteen (18) month extension to the Agreement.

Agreement Term and Rate
If the Third Amendment is approved, the Agreement will be extended eighteen (18) months from November 30, 2021 and terminate on May 31, 2023

All other terms and conditions of the Agreement remain unchanged.

Attachment(s)
Third Amendment to the Car Rental Concession Agreement

RESOLUTION NO. 21-43

WHEREAS, the Phoenix-Mesa Gateway Airport Authority ("Authority"), a joint powers airport authority formed pursuant to Arizona Revised Statute §28-8521 *et seq.* owns and operates the Phoenix-Mesa Gateway Airport ("Airport"); and

WHEREAS the Authority desires to authorize the Third Amendment to the Car Rental Concession Agreement with Enterprise Leasing Company of Phoenix, LLC;

NOW, THEREFORE, BE IT RESOLVED by the Board of Directors of the Authority as follows:

> **The Board of Directors of the Authority hereby authorize the Third Amendment to the Car Rental Concession Agreement with Enterprise Leasing Company of Phoenix, LLC. This resolution also authorizes the Chair or Executive Director/CEO to make such additions, deletions, and changes as may be approved by the Chair or Executive Director/CEO, necessary to carry out the purposes and intent of this Resolution.**

Passed and adopted by the Authority this 19th day of October, 2021.

_____
John Giles, Chair

ATTEST:

_____
Misty Johnson, Clerk of the Board

APPROVED AS TO FORM:

_____
Jill Casson Owen, Attorney

Phoenix-Mesa Gateway Airport Authority

THIRD AMENDMENT TO CAR RENTAL CONCESSION AGREEMENT

This THIRD AMENDMENT TO CONCESSION AGREEMENT ("Amendment 3") is executed to be effective as of the Twentieth (20th) day of October 2021, by and between the **PHOENIX-MESA GATEWAY AIRPORT AUTHORITY**, a joint powers airport authority authorized under the laws of the State of Arizona, its successors and assigns ("PMGAA"), and **ENTERPRISE LEASING COMPANY OF PHOENIX, LLC**, a Delaware limited liability company qualified to do business in the State of Arizona as **Enterprise Rent-A-Car, Alamo Rent a Car, and National Car Rental** ("Concessionaire") (collectively, the "Parties"). This AMENDMENT 3 hereby amends that certain Amended and Restated Car Rental Concession Agreement (as amended, the "Agreement") between PMGAA and Concessionaire dated and effective as of December 1, 2013 and amended on March 1, 2017 and August 1, 2019 with respect to Concessionaire's car rental business activities taking place at the Airport.

WITNESSETH:

WHEREAS, PMGAA is the owner and operator of the Phoenix-Mesa Gateway Airport (formerly the Williams Gateway Airport), an airport and airfield property generally located at the intersection of Ray Road and Sossaman Road, City of Mesa, Maricopa County, Arizona (the "Airport"); and

WHEREAS, PMGAA has the right to lease, license and grant the use of property and facilities on the Airport and has full power and authority to enter into this Agreement in respect thereof; and

WHEREAS, PMGAA desires Concessionaire's services as the operator of a Car Rental concession at the Airport, is willing to make space available for use by Concessionaire in connection therewith, and has deemed Concessionaire qualified to perform said services, and Concessionaire desires to perform and provide said services at the Airport; and

WHEREAS, the impacts of COVID-19 have significantly disrupted domestic and international travel and resulted in significant declines in passenger traffic at the Airport Terminal.

NOW, **THEREFORE**, in consideration of the mutual covenants and agreements contained in this AMENDMENT 3 and other good and valuable consideration, the receipt and sufficiency of which are hereby acknowledged, the Parties agree as follows:

1. A new Section 2.4 is added as follows:

   2.4 COVID-19 Extension. Provided Concessionaire is not then in default of this Agreement, Concessionaire may request an eighteen (18) month extension ("COVID-19 Extension") of the Term by providing PMGAA with a written request at least THIRTY (30) calendar days prior to the expiration of the Agreement. PMGAA will approve or deny the request, in writing, in its sole and absolute discretion, within SEVEN (7) calendar days after receipt of request for the COVID-19 Extension. Either Party may terminate this Agreement during the COVID-19 Extension by providing the notified Party NINETY (90) days advanced written notification of the terminating Party's intent to do so.

2. A new Section 22 is added as follows:

   22. ACDBE REQUIREMENTS

   This Agreement is subject to the requirements of the U.S. Department of Transportation's

regulations, 49 CFR Part 23. The Concessionaire agrees that it will not discriminate against any business owner because of the owner's race, color, national origin, or sex in connection with the award or performance of any concession agreement, management contract, or subcontract, purchase, or lease agreement, or other agreement covered by 49 CFR Part 23.

The Concessionaire agrees to include the above statement in any subsequent concession agreement or contract covered by 49 CFR Part 23, that it enters and cause those businesses to similarly include the statement in further agreements.

22.1 PMGAA's Airport Concession Disadvantaged Business Enterprise (ACDBE) Program is race- neutral. PMGAA encourages the use of ACDBEs and other small businesses in the performance of this concession opportunity. In order to be counted as an ACDBE, a small business must be certified as an ACDBE at time proposals are due by a certifying agency within the Arizona Unified Certification Program (UCP), or another certifying agency, in accordance with 49 CFR Part 23. Concessionaire shall make outreach efforts to obtain ACDBE and other small business participation in the performance of this Agreement.

22.1.1 Concessionaire agrees to employ outreach efforts to carry out this policy through award of subcontracts to small businesses and disadvantaged business enterprises to the fullest extent consistent with the sufficient performance of PMGAA's contract, and/or the utilization of ACDBE suppliers where feasible.

22.1.2 PMGAA shall not, nor shall it require its Concessionaires to, award contracts or subcontracts to or to make purchases of materials or equipment from small businesses and/or ACDBEs who are not qualified.

22.2 Record Requirements. Concessionaire is required to track and report all ACDBE and/or small business participation that occurs as a result of a contract, procurements, purchase orders, sublease, joint venture, goods/services, or other arrangements involving sub-tier participation.

22.2.1 PMGAA reserves the right to validate the information submitted by Concessionaire with the ACDBE firm listed and/or other certifying entities or licensing agents as part of the verification process.

22.2.2 Concessionaire shall keep sufficient records to track the requirements of PMGAA's ACDBE Program and 49 CFR Part 23 requirements, including, but not limited to (i) subcontract/supplier awards, specifically awards to ACDBE firms; (ii) specific efforts to identify and award such contracts to ACDBEs; and (iii) submit when requested, copies of executed contracts to establish actual ACDBE participation and ensure contract compliance with FAA requirements.

22.2.3 Concessionaire shall submit to PMGAA periodic reports of subcontract and/or supplier awards to ACDBE firms in such form and manner and at such times as PMGAA shall prescribe. Concessionaire shall provide access to books, records, and accounts to authorized officials of PMGAA, and Federal agencies for the purpose of verifying ACDBE participation and outreach efforts to carry out the ACDBE Policy and Program. See ATTACHMENT 1 for current report requirements.

22.2.4 Prior to any work commencing by Concessionaire's ACDBE subcontractors/suppliers, Concessionaire shall provide PMGAA copies of all executed contracts with such ACDBEs for review of contract compliance with PMGAA's ACDBE Program and Federal Requirements.

22.2.5 Audit determination(s) may be considered and have a bearing in the evaluation of Concessionaire's outreach efforts, on future contracts with PMGAA.

22.3 Outreach Efforts. During the performance of this Agreement, Concessionaire must

demonstrate it has performed outreach efforts to solicit participation from interested and qualified ACDBEs and other small businesses upon PMGAA's written request. This requires Concessionaire to document the identification of potential business opportunities for ACDBEs, describe what efforts were undertaken to solicit for ACDBE involvement, results of negotiations with potential ACDBEs, and record the communications of Concessionaire's selection or non- selection of ACDBEs.

The actions taken to meet outreach efforts must be substantiated by written documentation and provided to PMGAA. A declaration that outreach efforts were made will not be sufficient to meet the burden of proof required. PMGAA's decision as to whether or not outreach efforts have been made is final and conclusive.

Failure of Concessionaire to demonstrate such outreach efforts constitutes a material breach of this Agreement subject to termination by PMGAA.

22.4 Approved ACDBE Program. PMGAA's ACDBE Program dated October 2020, as amended from time to time, and approved by the FAA, all its terms and conditions is hereby incorporated into and made part of this Agreement by reference.

The approved ACDBE Program can be found on the PMGAA website, www.gatewayairport.com. PMGAA reserves the right to revise the ACDBE Program as required.

22.5 Amendments. PMGAA's ACDBE program shall also apply to any amendments to this Agreement that require work beyond the scope of services originally required to accomplish the project. Concessionaire shall make outreach efforts to obtain ACDBE participation for additional scope(s) of services.

22.6 Agreement Renewal and/or Extension. Prior to any Agreement renewal and/or extension, PMGAA shall have the right to review and/or revise the ACDBE requirements herein, including, but not limited to requiring an ACDBE goal if appropriate.

22.7 Enforcement. This Agreement and all subsequent subcontracts entered into as a result of this Agreement, are subject to the requirements, provisions, and enforcement actions of 49 CFR Part 26, Subpart F, *Compliance and Enforcement*, § 26.101 and 26.105 through 26.109.

The requirements of this SECTION 22 apply to Non-ACDBE prime Concessionaires and ACDBE prime Concessionaires. Failure to comply with the requirements of this SECTION 22 constitutes a breach of this Agreement. Such breach may lead to the termination or cancellation of the Agreement.

3. A new Section 23 is added as follows:

23. TITLE VI

23.1 Civil Rights Act of 1964, Title VI – General. Concessionaire agrees to comply with pertinent statues, Executive Orders, and such rules as are promulgated to ensure that no person shall, on the grounds of race, creed, color, or national origin, sex, age, or disability be excluded from participating in any activity conducted with or benefiting from Federal assistance. This provision binds the Concessionaire and subcontractors from the bid solicitation period through the completion of this Agreement. This provision is in addition to that required by Title VI of the Civil Rights Act of 1964.

Concessionaire agrees to include the above statement in any subsequent concession agreement or contract covered by 49 CFR part 23, that it enters and cause those businesses to similarly include the statements in further agreements.

23.2 Civil Rights Act of 1964, Title VI – Assurances. During the performance of this Agreement, Concessionaire, for itself, its assignees and successors in interest agrees as follows:

23.2.1 *Compliance with Regulations*. Concessionaire shall comply with the Title VI List of Pertinent Nondiscrimination Acts and Authorities, as they may be amended from time to time, which are herein incorporated by reference and made a part of this Agreement.

23.2.2 *Nondiscrimination*. Concessionaire, with regard to the work performed by it during the Term of this Agreement, shall not discriminate on the grounds of race, color, or national origin in the selection and retention of subcontractors, including procurements of materials and leases of equipment. Concessionaire will not participate directly or indirectly in the discrimination prohibited by the Nondiscrimination Acts and Authorities, including employment practices when the Agreement covers any activity, project, or program set forth in Appendix B of 49 CFR Part 21.

23.2.3 *Solicitations for Subcontracts, including Procurements of Materials and Equipment*. In all solicitations, either by competitive bidding, or negotiation made by Concessionaire for work to be performed under a subcontract, including procurements of materials, or leases of equipment, each potential subcontractor or supplier will be notified by the Concessionaire of Concessionaire's obligations under this Agreement and the Non-Discrimination Acts and Authorities on the grounds of race, color, or national origin.

23.2.4 *Information and Reports*. Concessionaire shall provide all information and reports required by the Acts, the Regulations, and directives issued pursuant thereto and shall permit access to its books, records, accounts, other sources of information, and its facilities as may be determined by PMGAA or the FAA to be pertinent to ascertain compliance with such Nondiscrimination Acts and Authorities and instructions. Where any information required of Concessionaire is in the exclusive possession of another who fails or refuses to furnish the information, Concessionaire will so certify to PMGAA or the FAA as appropriate and will set forth what efforts it has made to obtain the information.

23.2.5 *Sanctions for Noncompliance*. In the event of a Concessionaire's noncompliance with the Nondiscrimination provisions of this Agreement, PMGAA will impose such sanctions as it or the FAA may determine to be appropriate, including, but not limited to:

a. Withholding of payments to the Concessionaire under this Agreement until concessionaire complies, and/or:

b. Cancellation, termination, or suspension of this Agreement, in whole or in part.

23.2.6 *Incorporation of Provisions*. Concessionaire will include the provisions of SECTIONS 23.2.1 through 23.2.5 of this SECTION 23.2 in every subcontract, including procurements of materials and leases of equipment, unless exempt by the Acts, the Regulations and directives issued pursuant thereto. Concessionaire will take action with respect to any subcontract or procurement as PMGAA or the FAA may direct as a means of enforcing such provisions including sanctions for noncompliance. Provided, that if Concessionaire becomes involved in, or is threatened with litigation by a subcontractor, or supplier because of such direction, Concessionaire may request PMGAA to enter into any litigation to protect the interests of PMGAA. In addition, Concessionaire may request the United States to enter into the litigation to protect the interests of the United States.

23.3 Civil Rights – Title VI List of Pertinent Nondiscrimination Acts and Authorities. During the performance of this Agreement, Concessionaire, for itself, its assignees, and successors in interest (hereinafter referred to as the "Concessionaire" for purposes of this SECTION 23.3) agrees to comply with the following non-discrimination statutes and authorities; including but not limited to:

23.3.1 Title VI of the Civil Rights Act of 1964 (42 U.S.C. § 2000d *et seq*., 78 stat. 252) (prohibits discrimination on the basis of race, color, national origin);

23.3.2 49 CFR part 21 (Non-discrimination In Federally-Assisted Programs of

The Department of Transportation—Effectuation of Title VI of The Civil Rights Act of 1964);

23.3.3 The Uniform Relocation Assistance and Real Property Acquisition Policies Act of 1970 (42 U.S.C. § 4601), (prohibits unfair treatment of persons displaced or whose property has been acquired because of Federal or Federal-aid programs and projects);

23.3.4 Section 504 of the Rehabilitation Act of 1973 (29 U.S.C. § 794 *et seq.*), as amended (prohibits discrimination on the basis of disability); and 49 CFR part 27;

23.3.5 The Age Discrimination Act of 1975, as amended (42 U.S.C. § 6101 *et seq.*) (prohibits discrimination on the basis of age);

23.3.6 Airport and Airway Improvement Act of 1982 (49 USC § 471, Section 47123), as amended(prohibits discrimination based on race, creed, color, national origin, or sex);

23.3.7 The Civil Rights Restoration Act of 1987 (PL 100-209) (Broadened the scope, coverage and applicability of Title VI of the Civil Rights Act of 1964, The Age Discrimination Act of 1975 and Section 504 of the Rehabilitation Act of 1973, by expanding the definition of the terms "programs or activities" to include all of the programs or activities of the Federal-aid recipients, sub-recipients and contractors, whether such programs or activities are Federally funded or not);

23.3.8 Titles II and III of the Americans with Disabilities Act of 1990, which prohibit discrimination on the basis of disability in the operation of public entities, public and private transportation systems, places of public accommodation, and certain testing entities (42 U.S.C. §§ 12131 – 12189) as implemented by Department of Transportation regulations at 49 CFR parts 37 and 38;

23.3.9 The FAA's Non-discrimination statute (49 U.S.C. § 47123) (prohibits discrimination on the basis of race, color, national origin, and sex);

23.3.10 Executive Order 12898, Federal Actions to Address Environmental Justice in Minority Populations and Low-Income Populations, which ensures non-discrimination against minority populations by discouraging programs, policies, and activities with disproportionately high and adverse human health or environmental effects on minority and low-income populations;

23.3.11 Executive Order 13166, Improving Access to Services for Persons with Limited English Proficiency, and resulting agency guidance, national origin discrimination includes discrimination because of limited English proficiency (LEP). To ensure compliance with Title VI, you must take reasonable steps to ensure that LEP persons have meaningful access to your programs (70 Fed. Reg. at 74087 to74100);

23.3.12 Title IX of the Education Amendments of 1972, as amended, which prohibits you from discriminating because of sex in education programs or activities (20 U.S.C. 1681 et seq).

4. Concessionaire warrants and represents to PMGAA that: (i) all necessary actions have been taken to authorize the execution of this AMENDMENT 3 by Concessionaire; (ii) the persons who have executed this AMENDMENT 3 on behalf of Concessionaire are duly authorized to do so; and (iii) this AMENDMENT 3 constitutes a legal, valid and binding obligation of Concessionaire, enforceable against Concessionaire in accordance with its terms and the terms of the Agreement.

5. In all other respects, the Agreement shall remain unchanged and in full force and effect. The Agreement, as amended by this AMENDMENT 3, shall continue to be binding upon PMGAA and Concessionaire and their permitted successors and assigns.

6. All of the Recitals set forth above are incorporated into this AMENDMENT 3 by this reference.

IN WITNESS WHEREOF, the Parties have entered into this AMENDMENT 3 as of the date first set forth above.

FOR PMGAA:

PHOENIX-MESA GATEWAY AIRPORT AUTHORITY, a joint powers airport authority authorized by the State of Arizona

By: _____

Name: J. Brian O'Neill, A.A.E.

Its: Executive Director/CEO

FOR CONCESSIONAIRE:

ENTERPRISE LEASING COMPANY OF PHOENIX, LLC, a Delaware limited liability company

By: _____

Name:

Its:

ATTACHMENT 1

ACDBE Current Report Requirements

Quarterly Reporting of Goods and Services Purchased From ACDBE Firms
Federal Fiscal Year: _____

Reporting Period (circle one): 10/1 – 12/31 1/1 – 3/31 4/1 – 6/30 7/1 – 9/30

Concessionaire:_____ Contract No.:_____

Authorized Person Completing Form:_____

Title:_____Phone:_____

Email:_____

The following list represents goods and services purchased from ACDBE firm(s) for the above referenced contract during this reporting period in the amounts listed below. Goods and/or services include supplies, wholesale product, local advertising, automobiles, fuel, custodial, accounting, and other professional and contracted services that support the concessionaire's operations for this contract.

ACDBE Firm Providing Goods and/or Services	ACDBE Firm Contact Name, Phone, and Email Address	Type of Goods and/or Services Provided	NAICS Code(s)	Quarterly Expenditure(s) to this Firm
				$
				$
				$
				$
				$
				$
Total Goods and Service Provided by ACDBE Firms				**$**

Authorized Signature:_____Date:_____

Concessionaires must complete and submit this form by October 20, January 20, April 20, and July 20 to jlichtenberger@gatewayairport.com. If no ACDBE firms were used in the reporting period, the concessionaire should list "None" in the table before submitting the form.

To verify if a firm is an ACDBE, visit the Arizona Unified Transportation Registration and Certification System (AZ UTRACS) at this link: https://utracs.azdot.gov/search.

Phoenix-Mesa Gateway Airport Authority
5835 S Sossaman Road
Mesa, Arizona 85212-6014
www.gatewayairport.com

Board Action Item

Re: Resolution 21-44

To: Board of Directors
From: Shea Joachim, CEcD, Business Development Director
Through: J. Brian O'Neill, A.A.E., Executive Director/CEO
Subject: Hertz – First Amendment to Car Rental Concession Agreement
Date: October 19, 2021

Proposed Motion
To authorize the First Amendment to the Car Rental Concession Agreement with the Hertz Corporation.

Narrative
The Hertz Corporation ("Hertz") has operated the Hertz Rental Car brand under the current Car Rental Concession Agreement ("Agreement") since March 2014. The Agreement Initial Term was four (4) years and eight (8) months, and the Agreement has three (3) additional one-year Renewal Terms. Hertz has executed all three of the Renewal Terms and the Agreement is set to terminate on November 30, 2021.

The Airport intends to conduct a competitive solicitation to award new Car Rental Concession Agreements. However, the Airport believes the business climate has not been advantageous for the Airport to conduct a competitive solicitation. In addition, the Airport has identified some critical improvements to the facilities that support car rental operations. As such, Airport staff is recommending an additional eighteen (18) month extension to the Agreement.

Agreement Term and Rate
If the First Amendment is approved, the Agreement will be extended eighteen (18) months from November 30, 2021 and terminate on May 31, 2023.

All other terms and conditions of the Agreement remain unchanged.

Attachment(s)
First Amendment to the Car Rental Concession Agreement

RESOLUTION NO. 21-44

WHEREAS, the Phoenix-Mesa Gateway Airport Authority ("Authority"), a joint powers airport authority formed pursuant to Arizona Revised Statute §28-8521 *et seq.* owns and operates the Phoenix-Mesa Gateway Airport ("Airport"); and

WHEREAS the Authority desires to authorize the First Amendment to the Car Rental Concession Agreement with the Hertz Corporation;

NOW, THEREFORE, BE IT RESOLVED by the Board of Directors of the Authority as follows:

> **The Board of Directors of the Authority hereby authorize the First Amendment to the Car Rental Concession Agreement with the Hertz Corporation. This resolution also authorizes the Chair or Executive Director/CEO to make such additions, deletions, and changes as may be approved by the Chair or Executive Director/CEO, necessary to carry out the purposes and intent of this Resolution.**

Passed and adopted by the Authority this 19th day of October, 2021.

_____
John Giles, Chair

ATTEST:

_____
Misty Johnson, Clerk of the Board

APPROVED AS TO FORM:

_____
Jill Casson Owen, Attorney

Phoenix-Mesa Gateway Airport Authority

FIRST AMENDMENT TO CAR RENTAL CONCESSION AGREEMENT

This FIRST AMENDMENT TO CONCESSION AGREEMENT ("Amendment 1") is executed to be effective as of the Twentieth (20th) day of October 2021, by and between the **PHOENIX-MESA GATEWAY AIRPORT AUTHORITY**, a joint powers airport authority authorized under the laws of the State of Arizona, its successors and assigns ("PMGAA"), and **THE HERTZ CORPORATION**, a Delaware corporation qualified to do business in the State of Arizona ("Concessionaire") (collectively, the "Parties"). This AMENDMENT 1 hereby amends that certain Amended and Restated Car Rental Concession Agreement (the "Agreement") between PMGAA and Concessionaire dated and effective as of March 1, 2014 with respect to Concessionaire's car rental business activities taking place at the Airport.

WITNESSETH:

WHEREAS, PMGAA is the owner and operator of the Phoenix-Mesa Gateway Airport (formerly the Williams Gateway Airport), an airport and airfield property generally located at the intersection of Ray Road and Sossaman Road, City of Mesa, Maricopa County, Arizona (the "Airport"); and

WHEREAS, PMGAA has the right to lease, license and grant the use of property and facilities on the Airport and has full power and authority to enter into this Agreement in respect thereof; and

WHEREAS, PMGAA desires Concessionaire's services as the operator of a Car Rental concession at the Airport, is willing to make space available for use by Concessionaire in connection therewith, and has deemed Concessionaire qualified to perform said services, and Concessionaire desires to perform and provide said services at the Airport; and

WHEREAS, the impacts of COVID-19 have significantly disrupted domestic and international travel and resulted in significant declines in passenger traffic at the Airport Terminal.

NOW, **THEREFORE**, in consideration of the mutual covenants and agreements contained in this AMENDMENT 1 and other good and valuable consideration, the receipt and sufficiency of which are hereby acknowledged, the Parties agree as follows:

1. A new Section 2.4 is added as follows:

   2.4 <u>COVID-19 Extension</u>. Provided Concessionaire is not then in default of this Agreement, Concessionaire may request an eighteen (18) month extension ("COVID-19 Extension") of the Term by providing PMGAA with a written request at least THIRTY (30) calendar days prior to the expiration of the Agreement. PMGAA will approve or deny the request, in writing, in its sole and absolute discretion, within SEVEN (7) calendar days after receipt of request for the COVID-19 Extension. Either Party may terminate this Agreement during the COVID-19 Extension by providing the notified Party NINETY (90) days advanced written notification of the terminating Party's intent to do so.

2. A new Section 22 is added as follows:

   22. ACDBE REQUIREMENTS

   This Agreement is subject to the requirements of the U.S. Department of Transportation's regulations, 49 CFR Part 23. The Concessionaire agrees that it will not discriminate against any

business owner because of the owner's race, color, national origin, or sex in connection with the award or performance of any concession agreement, management contract, or subcontract, purchase, or lease agreement, or other agreement covered by 49 CFR Part 23.

The Concessionaire agrees to include the above statement in any subsequent concession agreement or contract covered by 49 CFR Part 23, that it enters and cause those businesses to similarly include the statement in further agreements.

22.1 PMGAA's Airport Concession Disadvantaged Business Enterprise (ACDBE) Program is race- neutral. PMGAA encourages the use of ACDBEs and other small businesses in the performance of this concession opportunity. In order to be counted as an ACDBE, a small business must be certified as an ACDBE at time proposals are due by a certifying agency within the Arizona Unified Certification Program (UCP), or another certifying agency, in accordance with 49 CFR Part 23. Concessionaire shall make outreach efforts to obtain ACDBE and other small business participation in the performance of this Agreement.

22.1.1 Concessionaire agrees to employ outreach efforts to carry out this policy through award of subcontracts to small businesses and disadvantaged business enterprises to the fullest extent consistent with the sufficient performance of PMGAA's contract, and/or the utilization of ACDBE suppliers where feasible.

22.1.2 PMGAA shall not, nor shall it require its Concessionaires to, award contracts or subcontracts to or to make purchases of materials or equipment from small businesses and/or ACDBEs who are not qualified.

22.2 Record Requirements. Concessionaire is required to track and report all ACDBE and/or small business participation that occurs as a result of a contract, procurements, purchase orders, sublease, joint venture, goods/services, or other arrangements involving sub-tier participation.

22.2.1 PMGAA reserves the right to validate the information submitted by Concessionaire with the ACDBE firm listed and/or other certifying entities or licensing agents as part of the verification process.

22.2.2 Concessionaire shall keep sufficient records to track the requirements of PMGAA's ACDBE Program and 49 CFR Part 23 requirements, including, but not limited to (i) subcontract/supplier awards, specifically awards to ACDBE firms; (ii) specific efforts to identify and award such contracts to ACDBEs; and (iii) submit when requested, copies of executed contracts to establish actual ACDBE participation and ensure contract compliance with FAA requirements.

22.2.3 Concessionaire shall submit to PMGAA periodic reports of subcontract and/or supplier awards to ACDBE firms in such form and manner and at such times as PMGAA shall prescribe. Concessionaire shall provide access to books, records, and accounts to authorized officials of PMGAA, and Federal agencies for the purpose of verifying ACDBE participation and outreach efforts to carry out the ACDBE Policy and Program. See ATTACHMENT 1 for current report requirements.

22.2.4 Prior to any work commencing by Concessionaire's ACDBE subcontractors/suppliers, Concessionaire shall provide PMGAA copies of all executed contracts with such ACDBEs for review of contract compliance with PMGAA's ACDBE Program and Federal Requirements.

22.2.5 Audit determination(s) may be considered and have a bearing in the evaluation of Concessionaire's outreach efforts, on future contracts with PMGAA.

22.3 Outreach Efforts. During the performance of this Agreement, Concessionaire must demonstrate it has performed outreach efforts to solicit participation from interested and qualified

ACDBEs and other small businesses upon PMGAA's written request. This requires Concessionaire to document the identification of potential business opportunities for ACDBEs, describe what efforts were undertaken to solicit for ACDBE involvement, results of negotiations with potential ACDBEs, and record the communications of Concessionaire's selection or non- selection of ACDBEs.

The actions taken to meet outreach efforts must be substantiated by written documentation and provided to PMGAA. A declaration that outreach efforts were made will not be sufficient to meet the burden of proof required. PMGAA's decision as to whether or not outreach efforts have been made is final and conclusive.

Failure of Concessionaire to demonstrate such outreach efforts constitutes a material breach of this Agreement subject to termination by PMGAA.

22.4 Approved ACDBE Program. PMGAA's ACDBE Program dated October 2020, as amended from time to time, and approved by the FAA, all its terms and conditions is hereby incorporated into and made part of this Agreement by reference.

The approved ACDBE Program can be found on the PMGAA website, www.gatewayairport.com. PMGAA reserves the right to revise the ACDBE Program as required.

22.5 Amendments. PMGAA's ACDBE program shall also apply to any amendments to this Agreement that require work beyond the scope of services originally required to accomplish the project. Concessionaire shall make outreach efforts to obtain ACDBE participation for additional scope(s) of services.

22.6 Agreement Renewal and/or Extension. Prior to any Agreement renewal and/or extension, PMGAA shall have the right to review and/or revise the ACDBE requirements herein, including, but not limited to requiring an ACDBE goal if appropriate.

22.7 Enforcement. This Agreement and all subsequent subcontracts entered into as a result of this Agreement, are subject to the requirements, provisions, and enforcement actions of 49 CFR Part 26, Subpart F, *Compliance and Enforcement*, § 26.101 and 26.105 through 26.109.

The requirements of this SECTION 22 apply to Non-ACDBE prime Concessionaires and ACDBE prime Concessionaires. Failure to comply with the requirements of this SECTION 22 constitutes a breach of this Agreement. Such breach may lead to the termination or cancellation of the Agreement.

3. A new Section 23 is added as follows:

23. TITLE VI

23.1 Civil Rights Act of 1964, Title VI – General. Concessionaire agrees to comply with pertinent statues, Executive Orders, and such rules as are promulgated to ensure that no person shall, on the grounds of race, creed, color, or national origin, sex, age, or disability be excluded from participating in any activity conducted with or benefiting from Federal assistance. This provision binds the Concessionaire and subcontractors from the bid solicitation period through the completion of this Agreement. This provision is in addition to that required by Title VI of the Civil Rights Act of 1964.

Concessionaire agrees to include the above statement in any subsequent concession agreement or contract covered by 49 CFR part 23, that it enters and cause those businesses to similarly include the statements in further agreements.

23.2 Civil Rights Act of 1964, Title VI – Assurances. During the performance of this Agreement, Concessionaire, for itself, its assignees and successors in interest agrees as follows:

23.2.1 *Compliance with Regulations*. Concessionaire shall comply with the Title VI

List of Pertinent Nondiscrimination Acts and Authorities, as they may be amended from time to time, which are herein incorporated by reference and made a part of this Agreement.

23.2.2 *Nondiscrimination*. Concessionaire, with regard to the work performed by it during the Term of this Agreement, shall not discriminate on the grounds of race, color, or national origin in the selection and retention of subcontractors, including procurements of materials and leases of equipment. Concessionaire will not participate directly or indirectly in the discrimination prohibited by the Nondiscrimination Acts and Authorities, including employment practices when the Agreement covers any activity, project, or program set forth in Appendix B of 49 CFR Part 21.

23.2.3 *Solicitations for Subcontracts, including Procurements of Materials and Equipment*. In all solicitations, either by competitive bidding, or negotiation made by Concessionaire for work to be performed under a subcontract, including procurements of materials, or leases of equipment, each potential subcontractor or supplier will be notified by the Concessionaire of Concessionaire's obligations under this Agreement and the Non-Discrimination Acts and Authorities on the grounds of race, color, or national origin.

23.2.4 *Information and Reports*. Concessionaire shall provide all information and reports required by the Acts, the Regulations, and directives issued pursuant thereto and shall permit access to its books, records, accounts, other sources of information, and its facilities as may be determined by PMGAA or the FAA to be pertinent to ascertain compliance with such Nondiscrimination Acts and Authorities and instructions. Where any information required of Concessionaire is in the exclusive possession of another who fails or refuses to furnish the information, Concessionaire will so certify to PMGAA or the FAA as appropriate and will set forth what efforts it has made to obtain the information.

23.2.5 *Sanctions for Noncompliance*. In the event of a Concessionaire's noncompliance with the Nondiscrimination provisions of this Agreement, PMGAA will impose such sanctions as it or the FAA may determine to be appropriate, including, but not limited to:

a. Withholding of payments to the Concessionaire under this Agreement until concessionaire complies, and/or:

b. Cancellation, termination, or suspension of this Agreement, in whole or in part.

23.2.6 *Incorporation of Provisions*. Concessionaire will include the provisions of SECTIONS 23.2.1 through 23.2.5 of this SECTION 23.2 in every subcontract, including procurements of materials and leases of equipment, unless exempt by the Acts, the Regulations and directives issued pursuant thereto. Concessionaire will take action with respect to any subcontract or procurement as PMGAA or the FAA may direct as a means of enforcing such provisions including sanctions for noncompliance. Provided, that if Concessionaire becomes involved in, or is threatened with litigation by a subcontractor, or supplier because of such direction, Concessionaire may request PMGAA to enter into any litigation to protect the interests of PMGAA. In addition, Concessionaire may request the United States to enter into the litigation to protect the interests of the United States.

23.3 Civil Rights – Title VI List of Pertinent Nondiscrimination Acts and Authorities. During the performance of this Agreement, Concessionaire, for itself, its assignees, and successors in interest (hereinafter referred to as the "Concessionaire" for purposes of this SECTION 23.3) agrees to comply with the following non-discrimination statutes and authorities; including but not limited to:

23.3.1 Title VI of the Civil Rights Act of 1964 (42 U.S.C. § 2000d *et seq*., 78 stat. 252) (prohibits discrimination on the basis of race, color, national origin);

23.3.2 49 CFR part 21 (Non-discrimination In Federally-Assisted Programs of The Department of Transportation—Effectuation of Title VI of The Civil Rights Act of 1964);

23.3.3 The Uniform Relocation Assistance and Real Property Acquisition Policies Act of 1970 (42 U.S.C. § 4601), (prohibits unfair treatment of persons displaced or whose property has been acquired because of Federal or Federal-aid programs and projects);

23.3.4 Section 504 of the Rehabilitation Act of 1973 (29 U.S.C. § 794 *et seq*.), as amended (prohibits discrimination on the basis of disability); and 49 CFR part 27;

23.3.5 The Age Discrimination Act of 1975, as amended (42 U.S.C. § 6101 *et seq*.) (prohibits discrimination on the basis of age);

23.3.6 Airport and Airway Improvement Act of 1982 (49 USC § 471, Section 47123), as amended(prohibits discrimination based on race, creed, color, national origin, or sex);

23.3.7 The Civil Rights Restoration Act of 1987 (PL 100-209) (Broadened the scope, coverage and applicability of Title VI of the Civil Rights Act of 1964, The Age Discrimination Act of 1975 and Section 504 of the Rehabilitation Act of 1973, by expanding the definition of the terms "programs or activities" to include all of the programs or activities of the Federal-aid recipients, sub-recipients and contractors, whether such programs or activities are Federally funded or not);

23.3.8 Titles II and III of the Americans with Disabilities Act of 1990, which prohibit discrimination on the basis of disability in the operation of public entities, public and private transportation systems, places of public accommodation, and certain testing entities (42 U.S.C. §§ 12131 – 12189) as implemented by Department of Transportation regulations at 49 CFR parts 37 and 38;

23.3.9 The FAA's Non-discrimination statute (49 U.S.C. § 47123) (prohibits discrimination on the basis of race, color, national origin, and sex);

23.3.10 Executive Order 12898, Federal Actions to Address Environmental Justice in Minority Populations and Low-Income Populations, which ensures non-discrimination against minority populations by discouraging programs, policies, and activities with disproportionately high and adverse human health or environmental effects on minority and low-income populations;

23.3.11 Executive Order 13166, Improving Access to Services for Persons with Limited English Proficiency, and resulting agency guidance, national origin discrimination includes discrimination because of limited English proficiency (LEP). To ensure compliance with Title VI, you must take reasonable steps to ensure that LEP persons have meaningful access to your programs (70 Fed. Reg. at 74087 to74100);

23.3.12 Title IX of the Education Amendments of 1972, as amended, which prohibits you from discriminating because of sex in education programs or activities (20 U.S.C. 1681 et seq).

4. Concessionaire warrants and represents to PMGAA that: (i) all necessary actions have been taken to authorize the execution of this AMENDMENT 1 by Concessionaire; (ii) the persons who have executed this AMENDMENT 1 on behalf of Concessionaire are duly authorized to do so; and (iii) this AMENDMENT 1 constitutes a legal, valid and binding obligation of Concessionaire, enforceable against Concessionaire in accordance with its terms and the terms of the Agreement.

5. In all other respects, the Agreement shall remain unchanged and in full force and effect. The Agreement, as amended by this AMENDMENT 1, shall continue to be binding upon PMGAA and Concessionaire and their permitted successors and assigns.

6. All of the Recitals set forth above are incorporated into this AMENDMENT 1 by this reference.

IN WITNESS WHEREOF, the Parties have entered into this AMENDMENT 1 as of the date first set forth above.

FOR PMGAA:

PHOENIX-MESA GATEWAY AIRPORT AUTHORITY, a joint powers airport authority authorized by the State of Arizona

By: _____

Name: J. Brian O'Neill, A.A.E.

Its: Executive Director/CEO

FOR CONCESSIONAIRE:

THE HERTZ CORPORATION, a Delaware corporation

By: _____

Name:

Its:

ATTACHMENT 1

ACDBE Current Report Requirements

Quarterly Reporting of Goods and Services Purchased From ACDBE Firms
Federal Fiscal Year: _____

Reporting Period (circle one): 10/1 – 12/31 1/1 – 3/31 4/1 – 6/30 7/1 – 9/30

Concessionaire:_____ Contract No.:_____

Authorized Person Completing Form:_____

Title:_____Phone:_____

Email:_____

The following list represents goods and services purchased from ACDBE firm(s) for the above referenced contract during this reporting period in the amounts listed below. Goods and/or services include supplies, wholesale product, local advertising, automobiles, fuel, custodial, accounting, and other professional and contracted services that support the concessionaire's operations for this contract.

ACDBE Firm Providing Goods and/or Services	ACDBE Firm Contact Name, Phone, and Email Address	Type of Goods and/or Services Provided	NAICS Code(s)	Quarterly Expenditure(s) to this Firm
				$
				$
				$
				$
				$
				$
Total Goods and Service Provided by ACDBE Firms				**$**

Authorized Signature:_____Date:_____

Concessionaires must complete and submit this form by October 20, January 20, April 20, and July 20 to jlichtenberger@gatewayairport.com. If no ACDBE firms were used in the reporting period, the concessionaire should list "None" in the table before submitting the form.

To verify if a firm is an ACDBE, visit the Arizona Unified Transportation Registration and Certification System (AZ UTRACS) at this link: https://utracs.azdot.gov/search.

Phoenix-Mesa Gateway Airport Authority
5835 S Sossaman Road
Mesa, Arizona 85212-6014
www.gatewayairport.com

Board Action Item

Re: Resolution 21-45

To:	**Board of Directors**
From:	**Matt Nebgen, Gateway Aviation Services Director**
Through:	**Scott Brownlee, Deputy Director/COO**
	J. Brian O'Neill, A.A.E., Executive Director/CEO
Subject:	**CIP 1217, Fueling Stands Replacement**
Date:	**October 19, 2021**

Proposed Motion
To authorize the purchase of five fueling stands from WSW Corp. dba WAAG (WAAG) in an amount not to exceed $59,018.41.

Narrative
This purchase will replace five aged fueling stands acquired in 2013 and 2015. The fueling stands will be purchased to meet the requirements of OSHA and the specifications per Attachment A of PMGAA's Request for Proposals (2022-007-RFP).

Request for Proposal No. 2022-007-RFP for five fueling stands was issued on August 12, 2021 and advertised in the Arizona Business Gazette on August 19 and 26 and September 2, 2021. The notice was also posted on the Airport's website as well as the AzAA and ACI-NA websites. In addition, the RFP notice was emailed to seven vendors.

PMGAA staff received one proposal in response to the RFP, from WAAG. Following PMGAA's Procurement Policy 19-27 when only one submittal is received, PMGAA staff confirmed that the specifications contained in the RFP were not overly restrictive and performed a price analysis to ensure the pricing received was in line with the equipment requested. It was determined that the pricing received through WAAG's proposal was in line with the requested equipment. Therefore, PMGAA staff is recommending award of this purchase to WAAG.

Fiscal Impact
This purchase was included in the FY22 capital budget and is funded by PMGAA non-grant.

Attachment(s)
Proposal

RESOLUTION NO. 21-45

WHEREAS, the Phoenix-Mesa Gateway Airport Authority ("Authority"), a joint powers airport authority formed pursuant to Arizona Revised Statute §28-8521 *et seq.* owns and operates the Phoenix-Mesa Gateway Airport ("Airport"); and

WHEREAS the Authority desires to authorize the purchase of five fueling stands from WSW Corp. dba WAAG (WAAG) in an amount not to exceed $59,018.41;

NOW, THEREFORE, BE IT RESOLVED by the Board of Directors of the Authority as follows:

> **The Board of Directors of the Authority hereby authorize the purchase of five fueling stands from WSW Corp. dba WAAG (WAAG) in an amount not to exceed $59,018.41. This resolution also authorizes the Chair or Executive Director/CEO to make such additions, deletions, and changes as may be approved by the Chair or Executive Director/CEO, necessary to carry out the purposes and intent of this Resolution.**

Passed and adopted by the Authority this 19th day of October, 2021.

_____
John Giles, Chair

ATTEST:

_____
Misty Johnson, Clerk of the Board

APPROVED AS TO FORM:

_____
Jill Casson Owen, Attorney

Phoenix-Mesa Gateway Airport

REQUEST FOR PROPOSALS
SOLICITATION #2022-007-RFP FOR FIVE (5) FUELING STANDS

SUBMITTAL COVER SHEET

Name of Offeror:	WSW Corp, dba: WAAG
EIN#:	95-3277-400
DUNS#:	05-763-3851
Principal Address:	16000 Strathern St
	Van Nuys, CA 91406
Primary Point of Contact:	Stephanie Bragger
Phone:	818-989-5008
Email:	support@waag.com

The undersigned hereby affirms that:

- The undersigned is a duly authorized agent of the Offeror
- The undersigned has read and understands all terms, conditions and commitments contained within the RFP and any addenda issued and fully understands and accepts these terms by submission of a proposal.
- The submission is being offered independently of any other Offeror and did not involve collusion or other anti-competitive practices.

By: _____ 8/26/2021
Signature Date

Stephanie Bragger Sales & Office Manager
Printed Name Title

"Confidential"

August 26, 2021

COVER LETTER

TO: All PMGAA Solicitation Parties
All PMGAA Evaluating Parties
All PMGAA Contract Award Parties

FROM: WSW Corp, dba: WAAG
Tax ID: 95-3277400
Sellers Permit #SR AC 13-730904
Cage #: 8MR67
DUNS #: 05-763-3851

To Whom It May Concern

WSW Corp, dba: WAAG, is a family owned "C" Corporation that has provided some of the Aviation Industry's most innovative products. WAAG specializes in the design and build of OSHA-Compliant mobile platforms and towable aircraft access products. For nearly half a century, WAAG products have been Made in the USA, in-house from start to finish. With unparalleled ingenuity, dedication to quality and a keen focus on keeping your employees safe, WAAG GSE products are the 'undisputed envy of the industry'.

Sincerely,

Mike Calka, President
WSW Corp, dba: WAAG
mike@waag.com

"CONFIDENTIAL"

August 26, 2021

CONFIDENTIAL & PROPRIETARY

The following items are deemed 'proprietary and confidential' to WSW Corp and dba: WAAG. These items are not to be made public for any reason and have been issued to PMGAA for the sole purpose of solicitation and subsequent to review and issuance of proposal and/or contract award.

-Any and all WAAG documents: Quotes, Sales Orders, Invoices, Marketing, Shipping, Instructions and Manuals.
-Any and all images that are submitted and are NOT found on WAAG.COM.
-Any information or imagery that shows WAAG product design, parts, construction and/or
-Any information provided to PMGAA that is in reference to Solicitation #2022-007-RFP.

WSW Corp, dba: WAAG, is a family owned Company that has made its name within the aviation world by providing some of the industry's most innovative products; designed, manufactured, built and powder coated in-house at our single location in Van Nuys, CA. For nearly half a century, WAAG products have been made with unparalleled ingenuity and dedication to quality, which continues to be the 'undisputed envy of the industry'.
In order to keep our reputation and products protected and secured, we trust that our customers will also honor our confidentiality and proprietary information in order to help maintain and protect WAAG and its products for years to come.

Sincerely,

Mike Calka, President
WSW Corp, dba: WAAG
mike@waag.com

"Confidential"

WAAG Adjustable Fueling Stair #21146

EQUIPMENT DESCRIPTION

- All stands are NEW and made to order
- Adjustable height stair for fueling the following aircraft: A320, B737, E175 and E190
- Top Deck adjusts with ease from 34"-66" with rubber bumper guards to protect aircraft
- Fuel nozzle and hose adjusts with the stand for ease of fueling
- Manufactured with heavy-duty steel tubing and cross bracing
- OSHA-Compliant forward ascent and descent stair with 42" handrails
- Signature design handrails mounted in two places to avoid potential damage. This creates a very sturdy unit both in up and down positions as well as side to side action.
- Galvanized steel grip-strut (non-slip) steps with signature baked on safety yellowing leading edge
- Single-action plunge brakes to secure stand in position
- Mounted Heavy-duty tow bar that is secured out of way when not in use
- KPL (King Pin-less) Poly-on Cast Swivel Wheels with precision bearings for easy maneuverability
- 16" solid rubber main wheels attached to heavy-duty steel axles
- Signature design tubular wheel chocks to secure stand both in and out of use
- High visibility powder coated frame with a second coat of UV resistant clear
- Overall footprint size:
  Top Deck: 34"tall in DOWN position, 66" tall in UP position
  Overall Size: 118"Lx57"Wx79"T in down position (110" tall in UP position)
  Grip Strut Steps: 9 ½" L x 33 ¾"W
  Services: E-175, E-190 and B-737 in DOWN position; A-320 in UP position

"We build products engineered to survive years of airport use and abuse."

E-175/A-320/B-737/E-190 Fueling Stair Adjustable 34" - 66" #21146

- **Main Feature:** This stand uses "Hydrant cart" plumbing to fuel the aircraft. NO stand certification is required. Top deck easily **adjusts** from 34" to 66" high without the use of hydraulics. Simply push or pull on a counter weighted lever and the hydrant cart hose and nozzle is easily put in position for personal to safely fuel the aircraft.
- **Heavy Duty Steel Construction:** Upper Deck Max Load is 600 lbs
- **O.S.H.A.** compliant forward ascent & descent stair.42"Handrails.
- **Handrails:** Signature design of heavy wall 1.5" round steel tubing mounted to stair rail in two places at lower end This design avoids potential damage and creates a very sturdy unit both in up and down and side to side action. The stand is very easy to maneuver by hand.
- **Steps & Deck:** Galvanized steel Grip Strut with signature baked on safety yellow leading edge.
- **Wheel Chocks**
- **Finish:** Powder coated with WAAG safety orange,and a second powder coat of U.V. resistant clear. (other colors on request)
- **Shipping:**

  Stair is shipped in one piece.

  l shipping weight is 1000 lbs.

  F.O.B. WAAG, Van Nuys, CA.

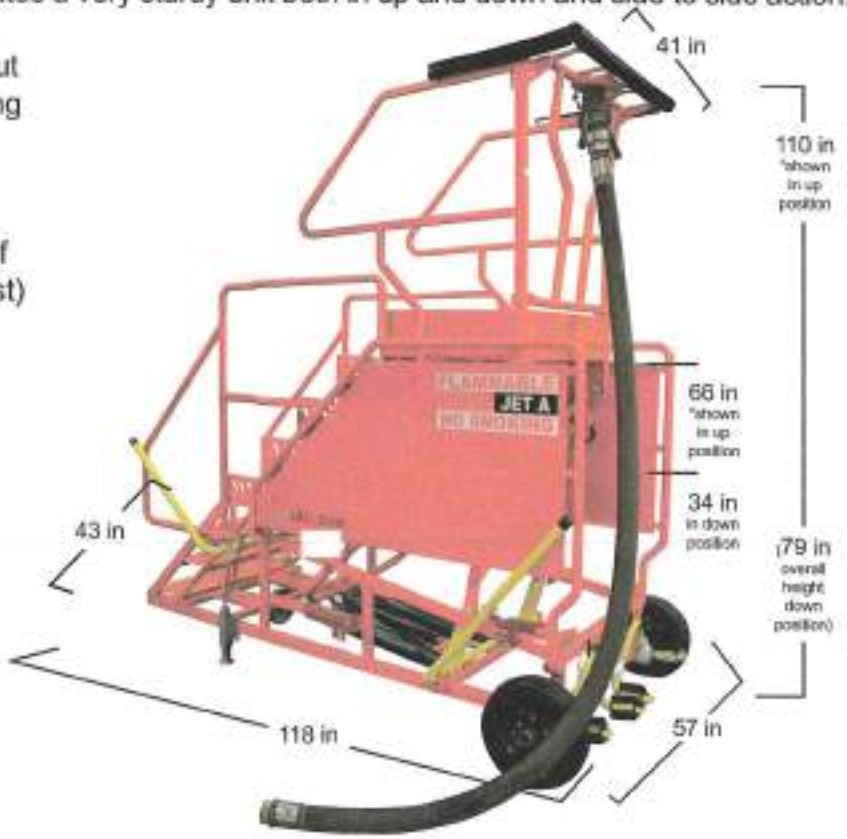

Down position
Deck Height at 34"

Heavy Duty Tow Bar

16" Solid Rubber Wheel
16"x4" Solid rubber main wheels with heavy duty axles and hubs.

KPL Swivel Wheels
2 - 8"x2" Urethane over steel wheels with Precision Bearings and heavy duty KPL swivels.

Single Action Plunge Brakes
Pull back on a lever and the stand is locked in place

"We build products engineered to survive years of airport use and abuse."

MADE IN USA

www.waag.com
16000 Strathern St. Van Nuys, CA 91406

Revised 08/25/2021

Phone:818-989-5008
Fax: 818-989-5226
Email: Support@Waag.com

Stand #21146

Adjustable Fueling Stair

Shipping Dimensions

***This stand is shipped as 1 unit: Weight is 1000 lbs.**

OVERALL DIMENSIONS: (118" L x 57" W x 79" H)

***Item pictured below.**

16000 Strathern St. Van Nuys, CA 91406 | 818-989-5008 | fax 818-989-5226

Assembly Instructions

34" - 66" Adjustable Fueling Stair #21146

REVIEW ALL INSTRUCTIONS AND PHOTOS BEFORE ASSEMBLY

⚠ **WARNING! Make sure the brake is on during assembly to avoid risk of injury**

STEP 1

Unpack .
Check for any damage.

STEP 2

Ensure all bolts are tightened and secured.

For a complete replacement parts list, or for any other questions, please contact call: 818-989-5008

Rev: 08/04/2021

Phoenix-Mesa Gateway Airport

Attachment A

Minimum Specifications Requirements Checklist

---

1. By submitting a proposal, Offeror hereby certifies that the Fueling Stands submitted for consideration by PMGAA under this solicitation, 2022-008-RFP, meets all specifications contained in this Attachment A.

   Signed: _____ **Date:** 08/26/2021

2. Specifications may be exceeded and should be noted here by Offeror and submitted to PMGAA as part of Offeror's proposal.

3. Manufacturer of Equipment proposed: WAAG

4. Model of Equipment proposed: #21146 Adjustable Fueling Stair

Continued on next page

Phoenix-Mesa Gateway Airport

Attachment A (Continued)

#	Fueling Stands	Met (Y or N)	Comments
1.	Fueling Stands are new	Y	
2.	Conforms to all Federal (OSHA) and State (ADOT) code requirements	Y N	YES, FOR OSHA NO, FOR ADOT - THERE ARE NO ADOT REQUIREMENTS
Frame			
3.	Heavy Duty Steel construction: Cross bracing for durability and long service life	Y	
4.	High visibility powder coated frame with second coat of UV resistant clear	Y	
5.	Steel handrails	Y	
6.	Rubber bumper on top of stand	Y	
7.	Steel tow bar	Y	
8.	Have the ability to raise and lower to avoid contacting the aircraft wing	Y	
Adjustability			
9.	Capable of servicing all of the following aircraft: Boeing 737, Airbus 320, Embraer 190, and Embraer 175	Y	
10.	Dual height	Y	
	Top deck height able to adjust from 34" – 66" to accommodate servicing multiple aircraft	Y	
12.	Ability to raise nozzle and hose for ease of fueling	Y	
Brakes			
13.	Single action plunge brake (no wheel brakes)	Y	
14.	Chocks	Y	
Wheels			
15.	Solid rubber main wheels with heavy duty axles and bearings	Y	
16.	Swivel wheels for ease of maneuverability	Y	
Steps			
17.	Nonslip steps	Y	
18.	Safety yellow leading edge	Y	
Fuel Hose/Single Point Nozzle			
19.	Not requested – do not want	N/A	
Dimensions			
20.	Overall size, must not exceed: Length: 120: Width: 60" Hand Railing Height: 79" in down position, 110" in up position (overall hand railing height must not exceed 110") Top Deck (standing platform): 34" high in down position, 66" high in up position Steps: 9 ½" long x 33 ¾ wide	Y	

Phoenix-Mesa Gateway Airport

Attachment B
Price Proposal

Item	Price
Five (5) New Fueling Stands, to Meet Minimum Specifications Requirements per Attachment A	$ 51,637.50 15% discount applied
Manuals on Operator, Service, and Parts – 2 Sets (Hard Copy & Digital)	$ 0.00
Sales Tax, 8.3% PMGAA is NOT tax exempt. If Offeror does not collect sales tax on behalf of the State of Arizona when invoicing, Offeror should still include tax at a rate of 7.6% for Use Tax.	$ 4,285.91
Standard Warranty on five (5) New Fueling Stands	$ 0.00
Shipping, five (5) new Fueling Stands	$ 3,095.00
Total	$ 59,018.41

Offeror's Payment Terms: Equipment: NET 30

Parts: NET 30

Discounts:
Prompt Payment: The price(s) quoted above can be discounted by 3 % if payment is made within 10 days.

Parts: PMGAA price for purchasing parts direct from the Offeror shall be discounted by 0 % of the current list price for parts published by Offeror.

Exceptions / Clarifications of Offeror:
If parts are purchased outside of WAAG for WAAG stands, warranty will be void.

Delivery Time Estimate: 8-10 weeks from when purchase order is received by WAAG

Equipment Manufacturer: WAAG

Equipment is Manufactured in (Country): USA

Stephanie Bragger
Printed Name

Signature

08/26/2021
Date

Phoenix-Mesa Gateway Airport

Attachment C
Warranty

Standard Warranty Information

Area / Category	Length (months)	Comments
#21146 Adjustable Fueling Stair	60	Limited 5yr Warranty, free of defects in workmanship and materials. See attached Warranty
Liability of consequential damages and/or claims for loss	0	
Claims for commercial business and/or personal injury or damages	0	
Rust, wheels, casters, springs and/or any sublet parts from other vendors up to and including product abuse/mishandling and/or damages caused by users	0	
Freight costs/damages	0	

Extended Warranty Options

Length (months)	Cost Per Unit

5-Year Limited WAAG Warranty

WAAG warrants the construction of our products to be free from defects in workmanship and materials with normal use for five (5) years from the date of purchase.

This warranty is limited to repair or replacement parts. WAAG reserves the right to repair or replace the part at its sole discretion. Where replacement is deemed necessary by WAAG, and an exact duplicate is not available, WAAG reserves the right to substitute a part of similar type, quality and cost.

WAAG expressly excludes from this warranty, liability for consequential damages included, but not limited to, claims for loss of use, and/or claims for commercial, business and/or personal injury or damages.

Exclusions to Warranty: Rust, wheels, casters, springs and any sublet parts from other vendors along with abuse, mishandling, damages by users, freight costs and foreign/overseas orders.

No products will be accepted for repair or return without a Return Goods Authorization (RGA) number. After receiving an RGA# from WAAG, send product freight prepaid to WAAG. Under no circumstances will products be received freight collect or without acknowledgement from WAAG personnel.

To obtain Warranty Service or an RGA#, please contact WAAG (818)989-5008.

Revised 06/2019

•16000 Strathern Street, Van Nuys, CA 91406 • (818) 989-5008 • FAX (818) 989-5226 • **WWW.WAAG.COM**•

Phoenix-Mesa Gateway Airport

Attachment D
Parts Availability and Capability

Offeror to describe their parts availability and capability as it pertains to PMGAA ordering and receiving parts (i.e. domestic availability or foreign availability, parts readily stocked, technical service advisors available, etc.), including turnaround time for order processing and shipping.

Sublet parts from other vendors can be foreign or domestic depending on price & availability.

Most parts are readily stocked for model #21146

Advisors are available during regular business hours via phone or email

Turn-around time depends on availability & staffing due to Covid-19

Most part orders are received, fulfilled and shipped within 3-7 business days unless otherwise notified.

For WAAG manufactured parts (ie: tow bar, brake lever, connecting arms, handrails, etc) please allow up to 3 weeks to fabricate and ship out.

WAAG utilizes FedEx for almost all shipping needs. It is up to the client (PMGAA) on stating a FedEx account # they would like WAAG to use and specify Ground, 2nd Day or Overnight shipping, otherwise, WAAG will add shipping costs to the Invoice w/timing specified by PMGAA.

Phoenix-Mesa Gateway Airport

Attachment E
Standard Certifications

Complete Attachment E by checking the applicable box(s) and/or providing responses. Failure to complete this Attachment E in its entirety and submit with Offeror's proposal will result in Offeror's submittal being deemed nonresponsive and not evaluated.

If Offeror cannot affirmatively certify to statement numbers 1 and 2 below, Offeror's submittal will be rejected and will not be evaluated.

1. Offeror hereby ☒ certifies ☐ does not certify
   That this engagement, if selected, will not result in a conflict of interest.

2. Offeror hereby ☒ certifies ☐ does not certify
   That the Equipment submitted for consideration by PMGAA under this solicitation 2022-007-RFP, meets or Exceeds, all Minimum Specifications Requirements contained in Attachment A.

If Offeror cannot affirmatively certify to statement number 3 below, PMGAA will consider Offeror's written response to determine if it's submittal will be accepted and be evaluated.

3. Offeror hereby ☒ certifies ☐ does not certify
   That it has no known business or financial relationships between Offeror or Offeror's firm and members of the PMGAA Board.

   If Offeror does have known business or financial relationships, please list them below:

   _____

   _____

   _____

   _____

   _____

By signature below, Offeror certifies that the information in this Attachment is true, and accurate.

Signature	08/26/2021 Date
Stephanie Bragger Printed Name	Sales and Office Manager Title

Phoenix-Mesa Gateway Airport

Attachment F
Offer Agreement

OFFER TO PHOENIX-MESA GATEWAY AIRPORT AUTHORITY:

The Offeror hereby certifies and agrees to furnish the Equipment and/or services in compliance with all terms, conditions, specifications, and amendments in the Request for Proposals including Attachment B – Price Proposal.

Company Name: WSW Corp, dba: WAAG

Federal Tax Identification Number: 95-3277400

Sales Tax Identification Number: SR AC 13-730904

Signature

08/26/2021
Date

Stephanie Bragger
Printed Name

Sales and Office Manager
Title

For clarification of this offer, contact:

Name: Stephanie Bragger

Title: Sales and Office Manager

Telephone: 818-989-5008

Email: support@waag.com

Phoenix-Mesa Gateway Airport

Attachment G

Authorization for Release of Performance Information and Waiver

---

The purpose of this disclosure is to provide references to PMGAA. Offeror hereby consents that as an Offeror to PMGAA's Solicitation 2022-007-RFP, Fueling Stands, for Phoenix-Mesa Gateway Airport, Offeror authorizes those companies and government entities listed in Offeror's RFP submittal and any other government entity for whom this company has provided fueling stands, to disclose and release to PMGAA, or their representatives, information, records and opinions concerning this company's past performance.

WSW Corp, dba: WAAG (Offeror) hereby waives any claim it may have against PMGAA or any company or entity providing information to PMGAA by reason of any information being disclosed or opinions provided regarding the actions or performance of this company.

This authorization for disclosure of information is effective for one (1) year.

This consent or copy of this authorization shall be as valid and effective as the original.

Signature of Offeror

08/26/2021

Date

Phoenix-Mesa Gateway Airport

Attachment H
References

Company Name: United Airlines
Contact Person: Paul Carlson
City, State: San Francisco, CA
Telephone: 650-874-3337
Model(s) Purchased: #65190 Wide Body Entry Stair and #65182 Adjustable Entry Stair
Date Purchased: Feb 2020

Company Name: American Airlines
Contact Person: Mike Cockerham
City, State: various airports including Dallas, TX/ Denver, CO/
Telephone: 951-318-7062
Model(s) Purchased: #90923 B737 MAX Entry Stair Retro-fit Kit
Date Purchased: Dec 2020

Company Name: Southwest Airlines
Contact Person: Eric Kenney
City, State: Ontario, CA
Telephone: 210-379-2012
Model(s) Purchased: #65182 Adjustable Entry Stair
Date Purchased: March 2021

Phoenix-Mesa Gateway Airport

Attachment I
Addenda Acknowledgement

Offeror is responsible for obtaining all addenda, if issued, via the PMGAA website at www.gatewayairport.com under the Business | Procurements, Vendors & Public Notices section or by other means (see Section One, Subsection A, paragraph 2, Addenda).

Failure to acknowledge, and include this form in Offeror's submittal, may cause Offeror's proposal to be deemed nonresponsive. If no addenda were issued, Offeror does not need to include this attachment in its proposal.

Offeror hereby acknowledges receipt of the following addenda issued by PMGAA for solicitation 2022-007-RFP (fill in Addendum Number and Date Issued).

Addendum No. _____ Date Issued: _____

Addendum No. _____ Date Issued: _____

Addendum No. _____ Date Issued: _____

Addendum No. _____ Date Issued: _____

Addendum No. _____ Date Issued: _____

By: _____
Signature

08/26/2021
Date

Stephanie Bragger
Printed Name

Sales and Office Manager
Title

Operations and Maintenance Manual
With Illustrated Parts Lists

34”- 66” Adjustable Fueling Stand #21146

www.waag.com

TABLE OF CONTENTS

DESCRIPTION	CHAPTER / SECTION	PAGE
1. Product Specification	1-1	
Fueling Stair Adjustable		
2. Main Assembly		3
Main Assembly Description	1-2	4
3. Fasteners for Main Body Assembly	1-3	5
Main Body Assembly Description		5
Main Body Assembly Parts List		5
4. Fasteners for Handrail Assembly	1-4	6
Handrail Assembly Description		6
Handrail Assembly Parts List		6
5. Fasteners for Brake Assembly	1-5	7
Brake Assembly Description		7
Brake Assembly Parts List		7
6. Fasteners for Heavy Duty Tow Bar Assembly	1-6	8
Heavy Duty Tow Bar Assembly Description		8
Heavy Duty Tow Bar Assembly Parts List		8
7. Fasteners for KPL Swivel Wheel Assembly	1-7	9
KPL Swivel Wheel Assembly Description		9
KPL Swivel Wheel Assembly Parts List		9
8. Fasteners for Height Adjustment Assembly	1-8	10
Height Adjustment Assembly Description		10
Height Adjustment Assembly Parts List		10
9. Fasteners for 16" Solid Rubber Wheel Assembly	1-9	11
16" Solid Rubber Wheel Assembly Description		12
16" Solid Rubber Wheel Assembly Parts List		12
10. Fasteners for Wheel Chock Assembly	1-10	13
Wheel Chock Assembly Description		13
Wheel Chock Assembly Part List		13
11. Operations, Safety and Maintenance	1-11	14

CHAPTER 1 - 1
SPECIFICATIONS

Dimensions:

- Top deck: 34" H (in down position) - 66" H (in up position)
- Overall size 118" L x 57" W x 110" H (in up position).
- Steps: 9-1/2" L x 33-3/4" W

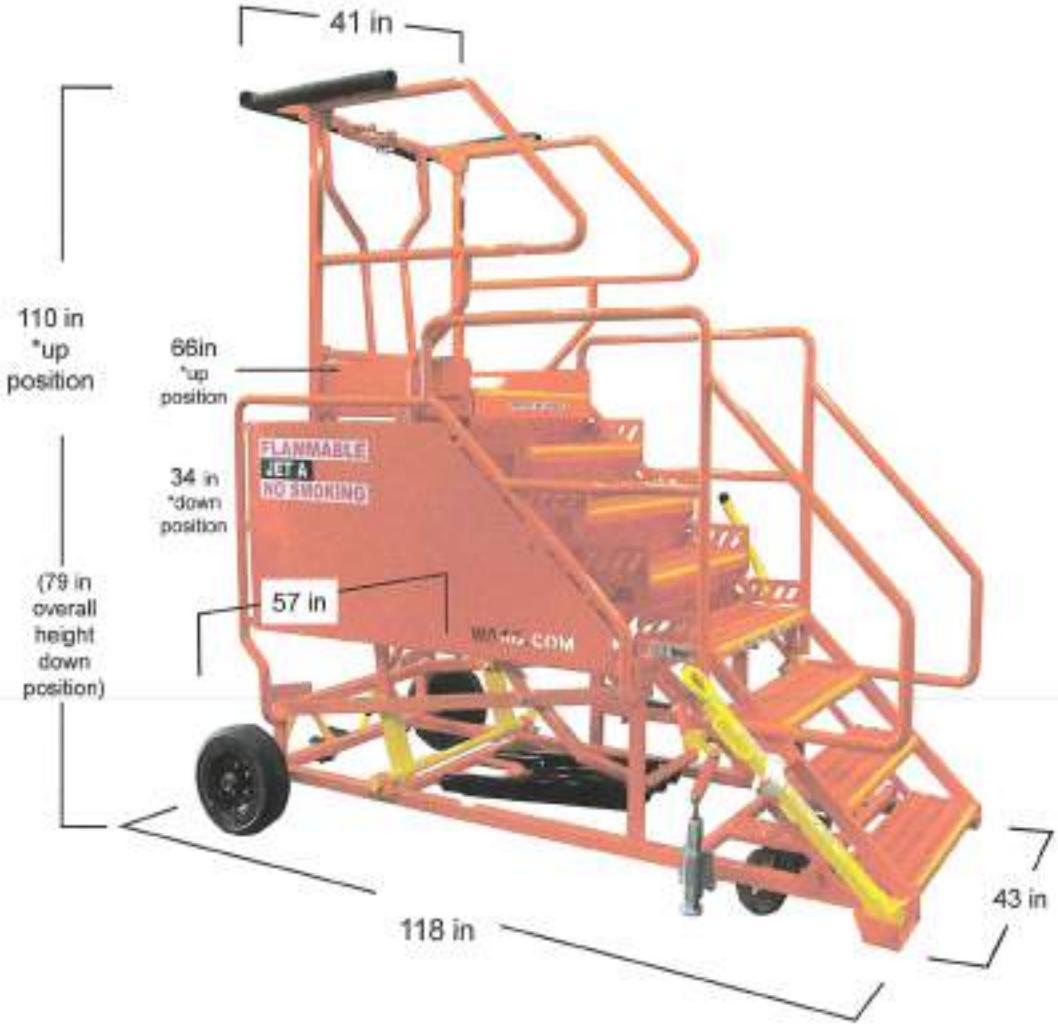

CHAPTER 1 - 2
MAIN ASSEMBLY

Assembly	Description
A	Main Body Assembly
B	Handrail Assembly
C	Brake Assembly
D	Tow Bar Assembly
E	Rear Wheel Assembly
F	Solid Rubber Wheel Assembly
G	Height Adjustment Assembly
H	Wheel Chock Assembly

CHAPTER 1 - 3
MAIN BODY ASSEMBLY

Fasteners for Main Body Assembly

Reference	Part # / Description	Qty.
A2	CARR3X5/16"	4
A2	DIAMONDWASHER5/16"	4
A2	FLATWASHER5/16"	4
A2	NYLON LN 5/16"	4

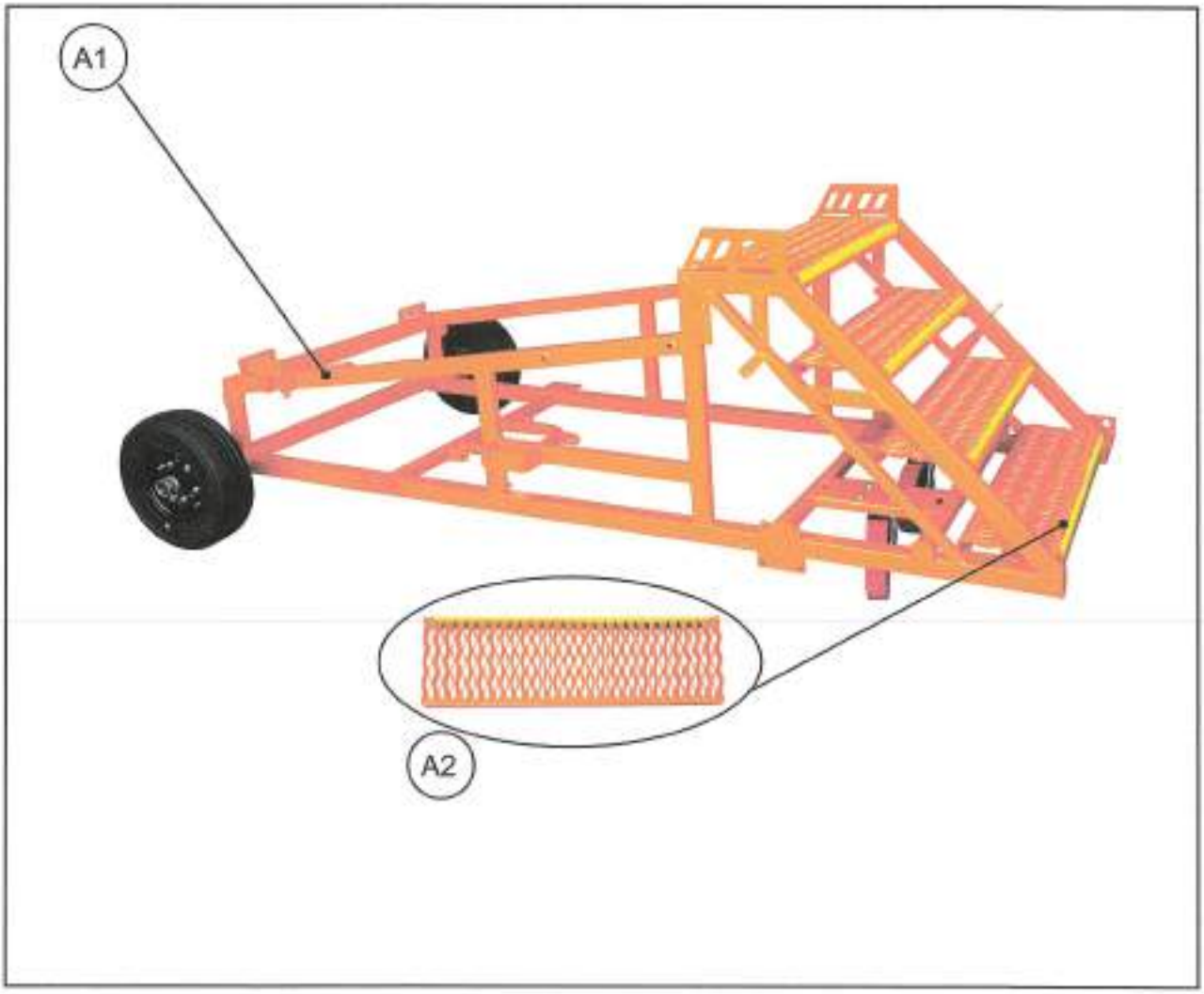

Item	Part #	Description
A1	MB21146	Main Body Frame *(wheels sold separately)
A2	90423	Grip Strut w/ Safety Yellow (33-3/4" x 9-1/2")

CHAPTER 1 - 4
HAND RAIL ASSEMBLY

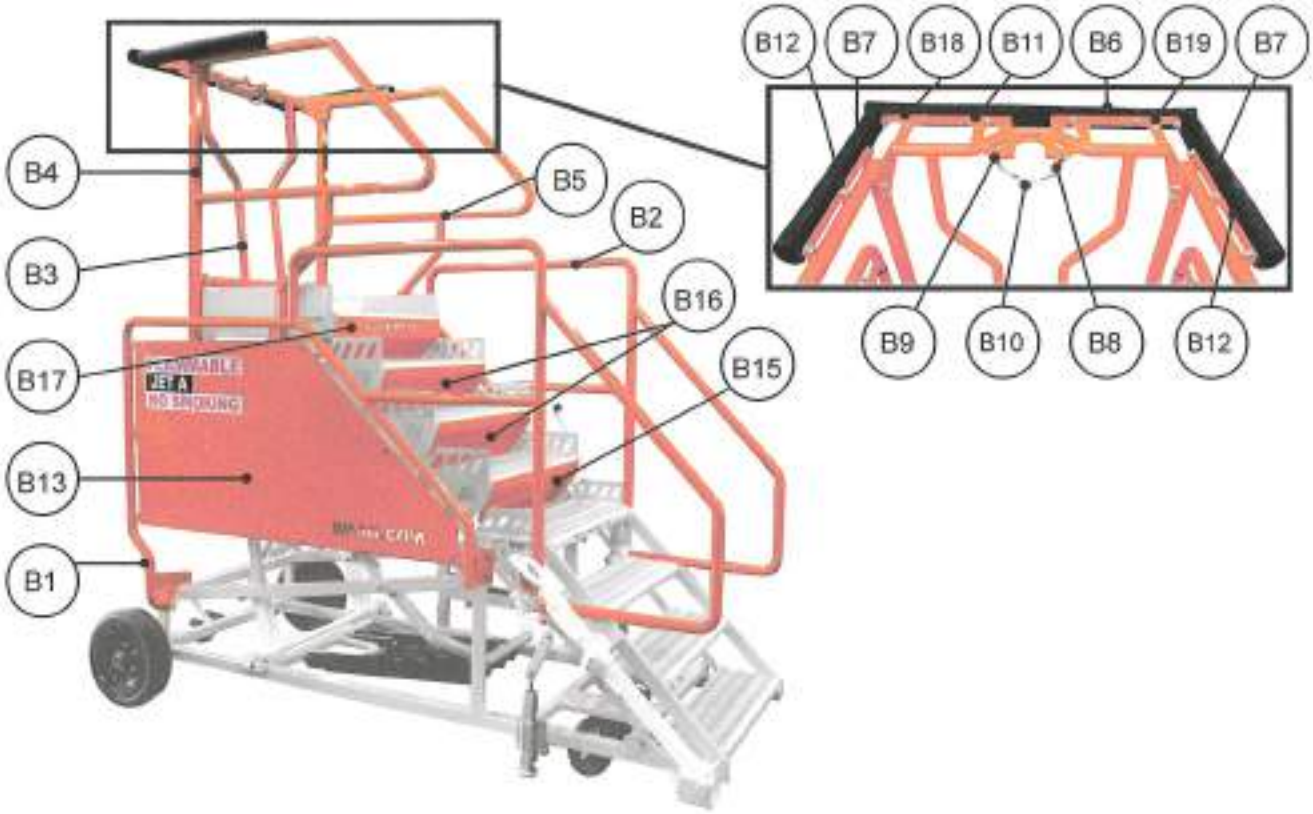

Item	Part #	Description
B1	90764L	Hand Rail - Lower Left Side
B2	90764R	Hand Rail - Lower Right Side
B3	90868	Center Hand Rail
B4	90753L	Hand Rail - Upper Left Side
B5	90753R	Hand Rail - Upper Right Side
B6	90340	Rubber Guard 2" x 41-7/8" Center Rail
B7	90341	Rubber Guard 2" x 24-1/2" Side Rail (Qty: 2)
B8	90135	Brass Snap Hook
B9	90133	Chain Link Connector (Qty: 2)
B10	90757	3/16" Galvanized Chain (6 Links)
B11	90755	Flat Stock Bracket (Mount for 41" Hose)
B12	90756	Flat Stock Bracket (Mount for 24-1/2" Hose) (Qty: 2)
B13	90870L	Shield (Left Side)
B14	90870R	Shield (Right Side)
B15	90871	Step Kick Plate Lower (Qty.1)
B16	90872	Step Kick Plate Middle (Qty.2)
B17	90873	Step Kick Plate Upper (Qty.1)
B18	90891L	Left Support Bracket Rubber Guards
B19	90891R	Right Support Bracket Rubber Guards

Fasteners for Hand Rail Assembly

Reference	Part # / Description	Qty.
B1, B2	HCS 3/8" X 1-1/4"	18
B1, B2	NYLON LN 3/8"	36
B1, B2	FLAT WASHER 3/8"	18
B3	HCS 1/4" x 3/4"	8
B3	NYLON LN 1/4"	8
B3	FLAT WASHER 1/4"	16
B4, B5	HCS 3/8" X 1-1/4"	8
B4, B5	NYLON LN 3/8"	16
B4, B5	FLAT WASHER 3/8"	8
B11	FLAT WASHER 3/8"	4
B11	NYLON LN 3/8"	2
B11	NYLON LP LN 3/8"	2
B12	NYLON LN 3/8"	6
B12	NYLON LP LN 3/8"	6
B13, B14	HCS 1/4" x 3/4"	12
B13, B14	NYLON LN 1/4"	24
B13, B14	FLAT WASHER 1/4"	12
B15,B16,B17	ALLEN BOLT 1/4"X3/4"	20
B15,B16,B17	NYLON LN 1/4"	20
B19, B20	HCS 3/8" X 1-1/4"	2
B19, B20	HCS 3/8" X 1"	2
B19, B20	FLAT WASHER 3/8"	8
B19, B20	NYLON LN 3/8"	4

CHAPTER 1 - 5
BRAKE ASSEMBLY

Fasteners for Brake Assembly

Reference	Part # / Description	Qty.
C4	HCS 3/8" - 16 X 1-1/2"	4
C4	FLATWASHER 3/8"	8
C4	NYLON LN 3/8" - 16	4
C2,C8,C11	HCS 3/8" - 16 X 1-1/2"	2
C2,C8,C11	FLATWASHER 3/8"	8
C2,C8,C11	NYLON LN 3/8" - 16	2
C7,C8,C11	HCS 1/2" - 16 X 2"	2
C7,C8,C11	FLATWASHER1/2"	8
C7,C8,C11	NYLON LN 1/2" - 16	2
C9	HCS 3/8" - 16 X 1-1/4"	8
C9	FLATWASHER 3/8"	16
C9	NYLON LN 3/8"	8

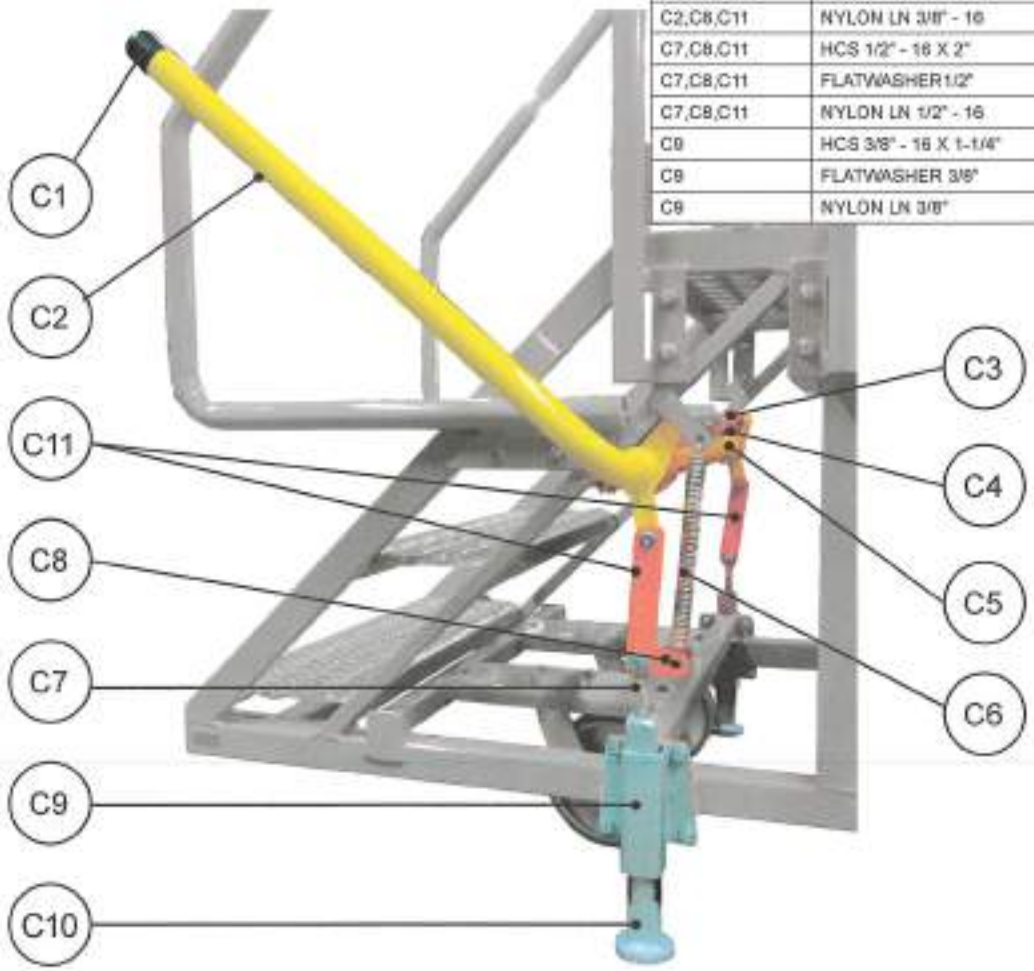

Item	Part #	Description
C1	90171	Vinyl Lever Cap
C2	90170	Brake Lever
C3	90162	Spacer Plate (Qty: 2)
C4	90153	U - Clamp (Qty: 2)
C5	90377	Bronze Sleeve (former ABS Sleeve) (Qty: 2)
C6	90128	Spring (6")
C7	90618	Adjustable Eye Bolt (Qty: 2)
C8	90750	Brake Connecting Arm L-Shape (7-1/4" x 1-1/4")
C9	90167	Plunger Brake Housing (Qty: 2)
C10	90168	Brake Plunger (Qty: 2)
C11	90749	Brake Connecting Arms (7-1/4" x 1-1/4") (Qty: 3)

CHAPTER 1 - 6
HEAVY DUTY TOW BAR ASSEMBLY

Fasteners for Tow Bar Assembly

Reference	Part # / Description	Qty.
D3	HCS1/4-20X1"	1
D2, D3	NYLONLN1/4"-20	2
D2, D3	FLATWASHER1/4"	4
D2	HCS1/4-20X1-1/2"	1

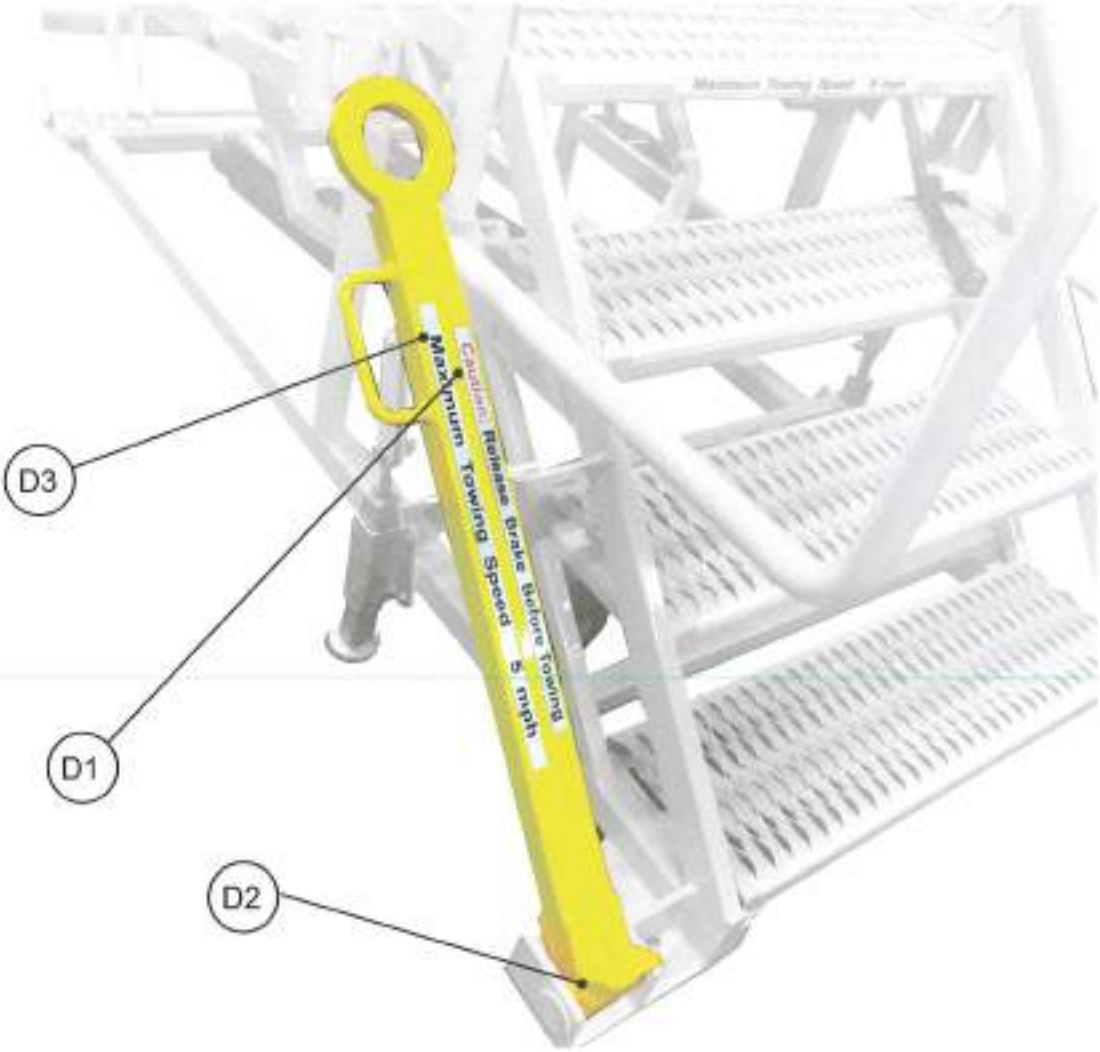

Item	Part #	Description
D1	90339	Tow Bar
D2	90173	Tow Bar Pin *(with fasteners)
D3	90889	Tow Bar Rubber Protector 2-1/2"x 1-1/4

CHAPTER 1 - 7
KPL SWIVEL WHEEL ASSEMBLY

Fasteners KPL Swivel Wheel Assembly

Reference	Part # / Description	Qty.
E1	HCS3/8-16X1-1/2"	4
E1	NYLONLN3/8"-16	4
E1	FLATWASHER3/8"	8
E2;E3	HCS1/2-13X4-1/2"	1
E3;E3	NYLONLN1/2"-13	1
E2;E3	FLATWASHER1/2"	2

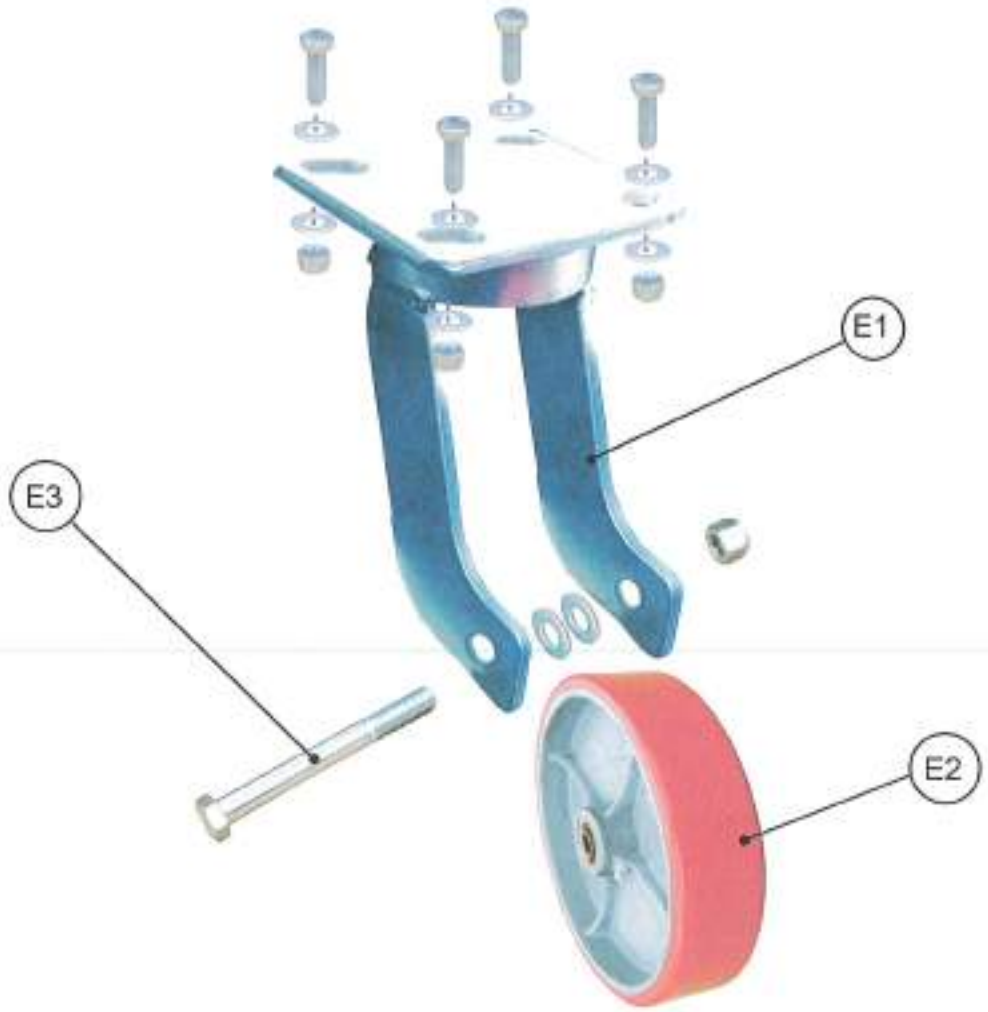

Item	Part #	Description
E1	90614	Swivel Caster
E2	90353	Urethane over Steel Wheel (8" x 2")
E3	90426	Axle Bolt

***To order complete assembly use Part #90104**

CHAPTER 1 - 8
HEIGHT ADJUSTMENT ASSEMBLY

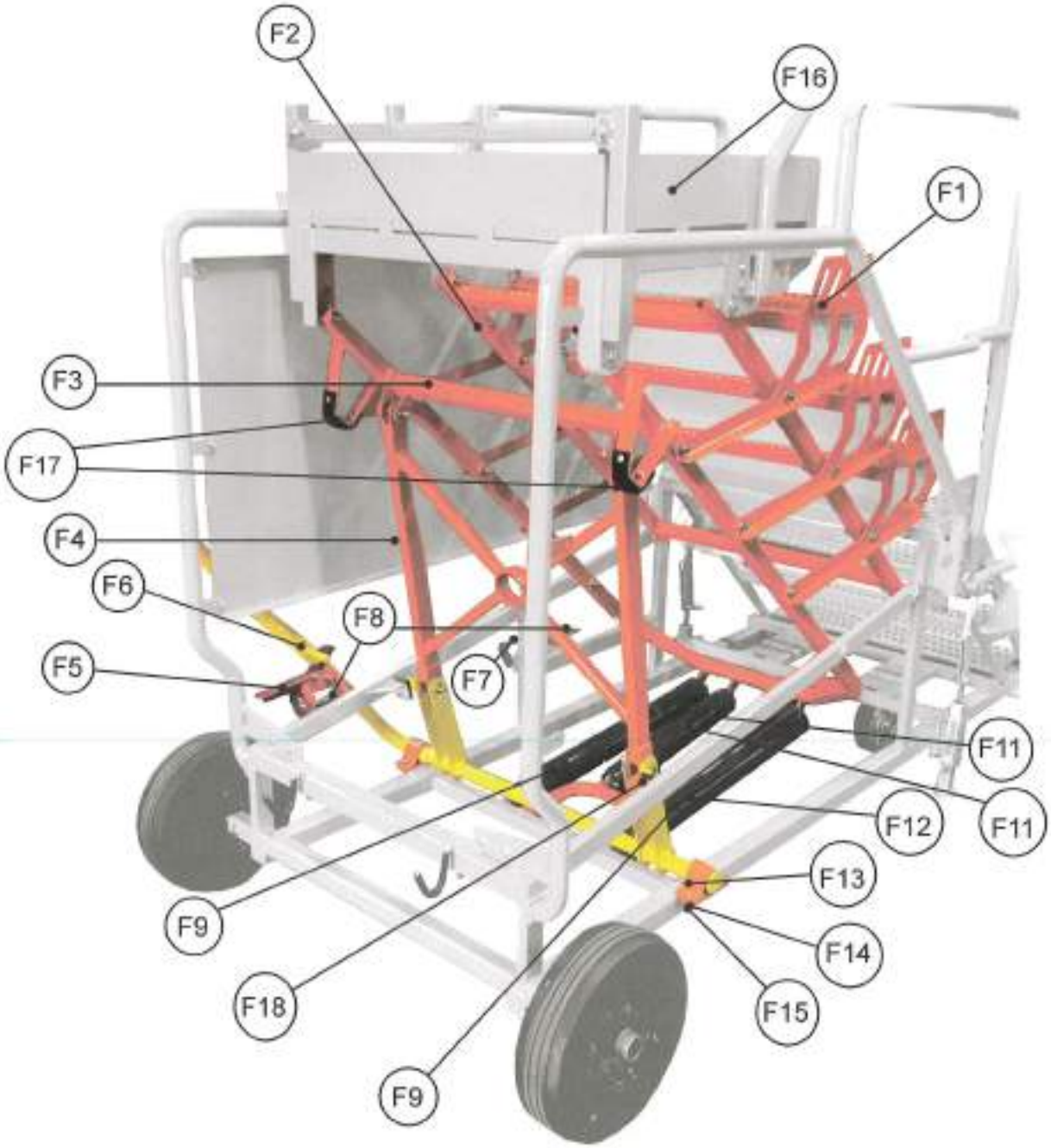

CHAPTER 1 - 8
HEIGHT ADJUSTMENT ASSEMBLY

Fasteners for Height Adjustment Assembly

Reference	Part # / Description	Qty.
F1	HCS3 1/2X1/2"	12
F1	LOCKNUT1/2"	12
F1	FLATWASHER1/2"	24
F1	HCS1X1/4"	12
F1	LOCKNUT1/4"	12
F1	FLATWASHER1/4"	24
F1	CARRIAGE5/16"	4
F1	DIAMONDWASHER5/16"	4
F1	LOCKNUT5/16"	4
F1	FLATWASHER5/16"	8

Reference	Part # / Description	Qty.
F2, F3	HCS4 1/2X1/2"	4
F2, F3	LOCKNUT1/2"	4
F2, F3	FLATWASHER1/2"	8
F4	HCS3 1/2X1/2"	4
F4	LOCKNUT1/2"	4
F4	FLATWASHER1/2"	8
F4	BUSHINGS3/16"	12
F4	BUSHINGS5/16"	4
F14	HCS3/8X1 1/2"	4
F14	LOCKNUT3/8"	4
F14	FLATWASHER3/8"	8

Item	Part #	Description
F1	90874	Pivot Step
F2	90344	Secondary Pivot Frame
F3	90345	Primary Pivot Frame
F4	90346	Lifting Frame *(with fasteners)
F5	90343	Rear Latch
F6	90347	Lifting Lever
F7	90342	Front Latch
F8	90129	Spring 3-1/2" (Qty. 2)
F9	90124	Spring P-328 Outer Springs
F10	90385	Spring P-320 Inner Springs
F11	90146	PVC Pipe 3-1/4" x 29" (Qty. 2) *(with fasteners)
F12	90145	PVC Pipe 2-1/2" x 28" (Qty. 2) *(with fasteners)
F13	90153	U-Clamp
F14	90162	Spacer Plate
F15	90377	Bronze Sleeve
F16	MDF21146	Main Deck Frame
F17	90887	Lifting Frame Rubber Protector 6-1/4"x 1-3/4"
F18	90888	Lifting Handle Bar Rubber Protector 2"x 2"

CHAPTER 1 - 9
16" SOLID RUBBER WHEEL ASSEMBLY

Fasteners 16" Solid Rubber Wheel Assembly

Reference	Description	Qty.
G1	HCS1/2-13X3"	1
G1	NYLONLN1/2"-13	1
G1	FLATWASHER1/2"	2

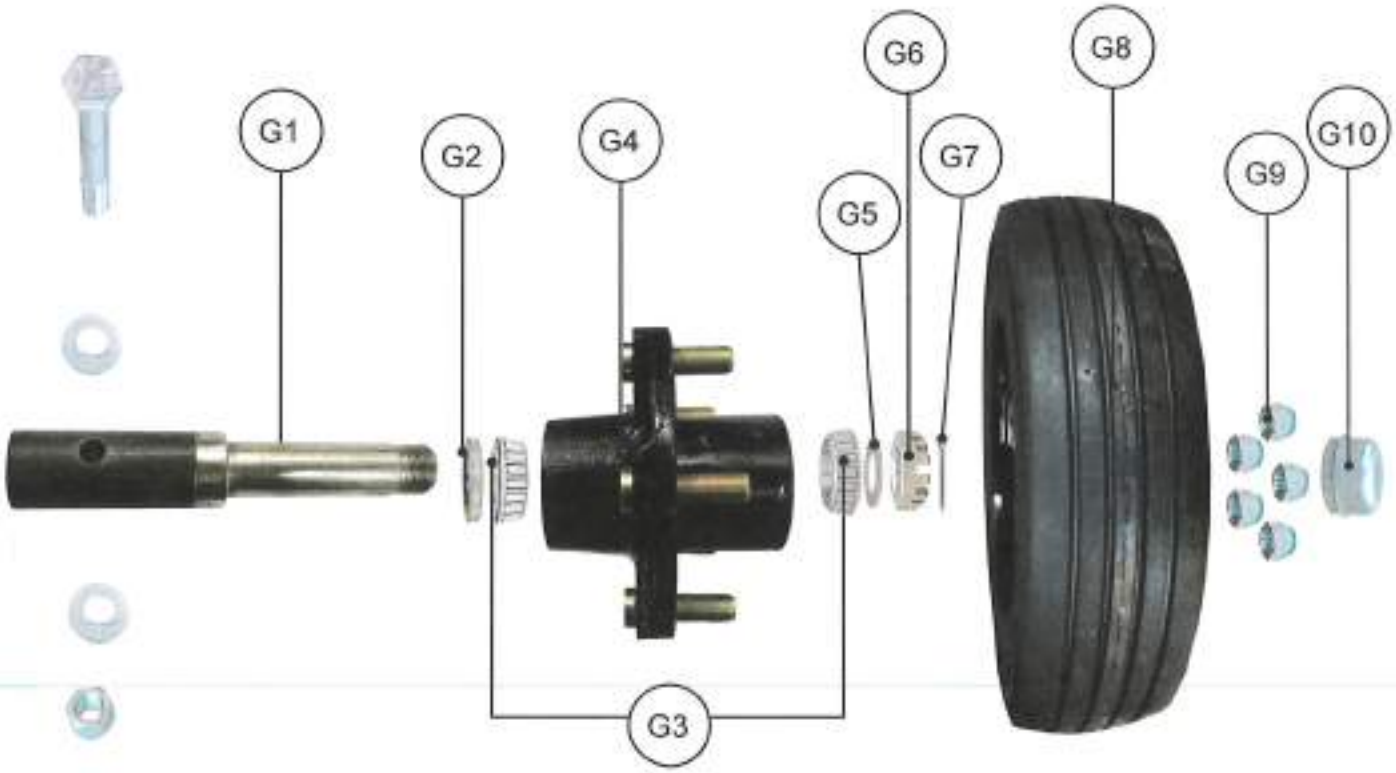

Item	Part #	Description
G1	90549	Spindle (2500 lbs)
G2	90549S	Seal
G3	90549B	Bearing
G4	90549H	Hub
G5	90121W	Washer
G6	90121N	Locking Nut
G7	90121CP	Cotter Pin
G8	90123	16" Solid Rubber Tire with Rim
G9	90121LN	Lug Nuts (qty. 5)
G10	90121DC	Dust Cap

CHAPTER 1 - 10
WHEEL CHOCK ASSEMBLY

Fasteners for Wheel Chock Assembly

Reference	Description	Qty.
H2, H3	EYE BOLT 1/4" - 13 X 1-1/2"	2
H2, H3	NYLON LN 1/4"-13	2
H3	HCS 1/4" - 13 X 1-1/2"	2
H3	NYLON LN 1/4"-13	2

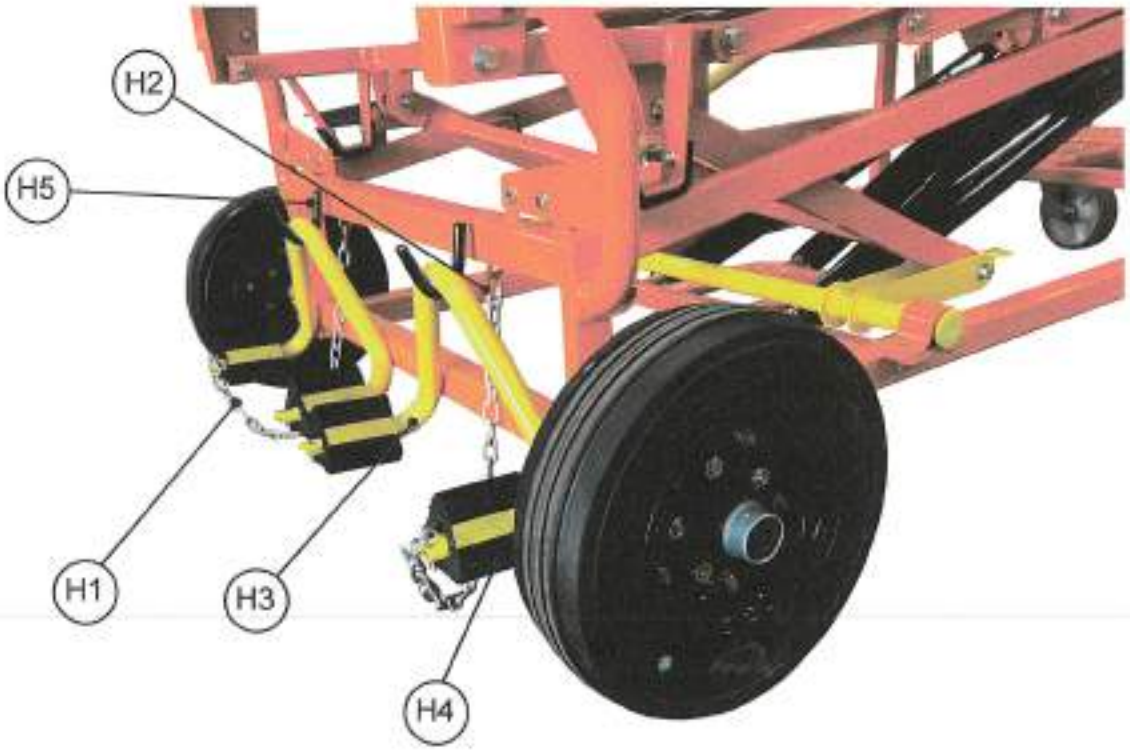

Item	Part #	Description
H1	90757	Galvanized Chain (Links 23) (Qty: 2)
H2	90133	Chain Link Connector (Qty: 2)
H3	90587	1.25" Round Tube Chock (Qty: 2)
H4	90730	Chock Rubber 4" (Qty: 4)
H5	90890	Wheel Chock Rubber Protector (Qty: 2)

***To order complete assembly use Part# 90588**

CHAPTER 1 - 12
OPERATIONS, SAFETY AND MAINTENANCE

MAINTENANCE

1-1 Regularly check Brakes and Lifting Frames

1-2 Check that Handrails are secure. Tighten bolts if necessary

1-3 Check that all bolts that connect Upper Deck to Stand are secure. Tighten if necessary

1-4 Check Wheels for wear and smooth operation

1-5 Check Wheel Chocks for wear

OPERATIONS

1-1 Always set Wheel Chocks when stand is to be used

1-2 Always set Brake when Stand is to be used

1-3 Release Brakes and Wheels Chocks prior to towing Stand

FUELING PROCEDURES

1-1 Position the stand so that the upper deck is under the fuel port of the aircraft.

1-2 Engage brake.

1-3 Pull hydrant cart hose and nozzle to the stand providing some slack in the hose to allow the hose and nozzle to lift up to the fueling position.

1-4 Hang hydrant cart fuel nozzle on yellow lifting arm 'U' hook.

1-5 Pull lifting arm lever into the up position. Ensure that the red lever lock is engaged.

1-6 Walk up to the upper deck, remove fueling cap and stow in the cap receptacle in the center of the upper handrail.

1-7 Fuel aircraft.

1-8 ***When fueling is complete be sure to replace the fuel cap on the aircraft.***

1-9 Lower lifting arm and rewind hose on hydrant cart.

TOWING PROCEDURES

1-1 Check around fueling stand to ensure hydrant hose is properly stowed on hydrant cart. Ensure grounding wires are disconnected from the fueling stand.

1-2 Release brake.

1-3 Attach tow bar to tug and you're ready to go.

SAFETY

1-1 Pinch Points are identified on Stands. **KEEP HANDS AWAY FROM THESE AREAS WHEN USING LIFTING LEVER TO ADJUST STAND UP OR DOWN.**

1-2 **NO ITEMS OR PERSONS SHOULD BE ON UPPER DECK WHILE ADJUSTING STAND UP OR DOWN.**

"We build products engineered to survive years of airport use and abuse."

Specialists in Custom Products & Sizes
16000 Strathern St. Van Nuys, CA 91406 • 818-989-5008 • fax 818-989-5226
Please visit us at waag.com

www.waag.com

Phoenix-Mesa Gateway Airport Authority
5835 S Sossaman Road
Mesa, Arizona 85212-6014
www.gatewayairport.com

Board Action Item

Re: Resolution 21-46

To:	**Board of Directors**
From:	**Chris Brady, Mesa City Manager**
Through:	**Jill Casson Owen, Snell & Wilmer**
Subject:	**Employment Contract Amendment – Executive Director**
Date:	**October 19, 2021**

Proposed Motion
To approve a fifth amendment to the Executive Director's employment agreement effective October 1, 2021.

Narrative
The Board of Directors approved an employment agreement with Mr. J. Brian O'Neill on September 21, 2016, amended as of October 1, 2017, amended as of October 1, 2018, amended as of October 1, 2019 and amended as of October 1, 2020. The fifth amendment to Employment Agreement provides for a four percent increase in Mr. O'Neill's base salary and an adjustment to vacation accrual, effective October 1, 2021. There are no other changes to the agreement.

RESOLUTION NO. 21-46

WHEREAS, the Phoenix-Mesa Gateway Airport Authority ("Authority"), a joint powers airport authority formed pursuant to Arizona Revised Statute §28-8521 *et seq.* owns and operates the Phoenix-Mesa Gateway Airport ("Airport"); and

WHEREAS the Authority desires to amend the employment agreement with Mr. J. Brian O'Neill;

NOW, THEREFORE, BE IT RESOLVED by the Board of Directors of the Authority as follows:

> **The Board of Directors of the Authority hereby approves the fifth amendment to employment agreement with Mr. J. Brian O'Neill, effective October 1, 2021. This resolution also authorizes the Chair to execute such agreement, with such insertions, deletions, and changes as may be approved by the Chair necessary to carry out the purposes and intent of this Resolution.**

Passed and adopted by the Authority this 19th day of October, 2021.

_____
John Giles, Chair

ATTEST:

_____
Misty Johnson, Clerk of the Board

APPROVED AS TO FORM:

_____
Jill Casson Owen, Attorney

Phoenix-Mesa Gateway Airport Authority
5835 S Sossaman Road
Mesa, Arizona 85212-6014
www.gatewayairport.com

Board Action Item

Re: Resolution 21-47

To:	**Board of Directors**
From:	**R. J. Draper, P.E., LEED AP, CM Engineering & Facilities Director**
Through:	**Scott Brownlee, Deputy Director/COO**
	J. Brian O'Neill, A.A.E., Executive Director/CEO
Subject:	**Center RWY 12C/30C Reconstruction Design Services – Dibble Engineering**
Date:	**October 19, 2021**

Proposed Motion
To approve an Authorization of Services with Dibble Engineering for Engineering Design Services for the Center RWY 12C/30C Design and Reconstruction Project in an amount not to exceed $569,673 under CIP 1202.

Narrative
Due to the continued commercial aircraft usage and age of the pavement, the Center RWY 12C/30C pavement is deteriorated and has been recommended for major reconstruction. The Center RWY 12C/30C Design and Reconstruction Project consists of engineering and design services for the reconstruction of the first 1000ft of RWY 12C and 2500ft of RWY 30C beginning 1000' from the threshold.

Dibble Engineering will provide civil engineering design plans, technical specifications, bidding documents; and will utilize specialty subconsultants for geotechnical investigations of pavement design and for airfield lighting and signage design services.

In 2019, a Request for Qualifications, 2020-007-RFQ for On-Call Engineering Services was issued. Dibble Engineering was one of two firms selected as the most qualified. In accordance with the terms of our agreement, C-2020007-B, Dibble Engineering worked with Airport staff to refine a Scope of Work for Engineering Design Services for the Center RWY 12C/30C Design and Reconstruction. The cost for these services was negotiated based upon the contract fee schedule at a cost not-to-exceed $569,673.

Fiscal Impact
This project is included in the FY22 Capital Budget utilizing FAA, ADOT and PMGAA Matching Grant Funds under CIP 1202.

Attachment(s)
Authorization of Services

RESOLUTION NO. 21-47

WHEREAS, the Phoenix-Mesa Gateway Airport Authority ("Authority"), a joint powers airport authority formed pursuant to Arizona Revised Statute §28-8521 *et seq.* owns and operates the Phoenix-Mesa Gateway Airport ("Airport"); and

WHEREAS the Authority desires to approve an Authorization of Services with Dibble Engineering for Engineering Design Services for the Center RWY 12C/30C Design and Reconstruction Project in an amount not to exceed $569,673 under CIP 1202;

NOW, THEREFORE, BE IT RESOLVED by the Board of Directors of the Authority as follows:

> **The Board of Directors of the Authority hereby approves an Authorization of Services with Dibble Engineering for Engineering Design Services for the Center RWY 12C/30C Design and Reconstruction Project in an amount not to exceed $569,673 under CIP 1202. This resolution also authorizes the Chair or Executive Director/CEO to make such additions, deletions, and changes as may be approved by the Chair or Executive Director/CEO, necessary to carry out the purposes and intent of this Resolution.**

Passed and adopted by the Authority this 19th day of October, 2021.

_____
John Giles, Chair

ATTEST:

_____
Misty Johnson, Clerk of the Board

APPROVED AS TO FORM:

_____
Jill Casson Owen, Attorney

AUTHORIZATION OF SERVICES
Dibble, AOS 20B-2201

The signing of this Authorization (Agreement) by Phoenix-Mesa Gateway Airport Authority (PMGAA) and Dibble & Associates Consulting Engineers Inc. ("Dibble"), authorizes Dibble to carry-out and complete the services described below in consideration of the mutual covenants set forth below:

1. **PROJECT**: Design and Bid Phase Services for RWY 12C-30C Reconstruction PH1 under CIP 1202.

2. **SCOPE OF WORK**: Perform and provide Engineering Design Services and Bid Phase Services for the RWY 12C-30C Reconstruction Phase 1. All services are to be performed in accordance with PMGAA Agreement C-2020-007-B, including the Standard Terms, and the attached detailed scope of work. Services shall be coordinated with and approved by PMGAA Authorized Representative prior to start of work.

3. **FEE FOR SERVICES**: The fee for services shall be based upon the attached scope of work, not to exceed Five hundred sixty-nine thousand, six hundred seventy-three dollars and zero cents ($569,673), of PMGAA funds without the express written approval of PMGAA.

4. **AVAILABILITY OF PROJECT FUNDING:** The approval and continuation of this contract is subject to the availability of funds provided to, made available to, or appropriated by PMGAA for this purpose. In the event that funds are not available or appropriated for PMGAA's payment requirements under this contract for the goods and/or services to be provided hereunder, PMGAA may terminate this contract by providing notice to the consultant of the lack of the availability of funds. The consultant acknowledges and agrees that one source of funding for this contract may be funds made available from the Federal Aviation Administration and/or Arizona Department of Transportation, and that this contract, its approval and continuation, may contingent on the availability of those funds being made to PMGAA.

5. **INCORPORATED:** The following documents are hereby incorporated with this Authorization of Services and made part thereof:

   ☑ PMGAA Agreement C-2020007-B dated December 17, 2019.

6. **ATTACHED:** The following documents are attached to this Agreement and are incorporated herein by this reference made part thereof:

☑ Scope and Fee Proposal dated October 4, 2021.

PMGAA and Dibble acknowledge that they are in agreement with the terms and conditions as set forth in this Authorization.

APPROVED FOR PMGAA:

By:_____

Print: J. Brian O'Neill, A.A.E.

Title: Executive Director/CEO

Date:_____

ACCEPTED FOR Dibble:

By: Kenneth L. Snyder

Print: Kenneth L. Snyder, P.E.

Title: Vice President

Date: 10.04.2021

Phoenix-Mesa Gateway Airport Authority
5835 S Sossaman Road
Mesa, Arizona 85212-6014
www.gatewayairport.com

Board Action Item

Re: Resolution 21-48

To:	**Board of Directors**
From:	**R. J. Draper, P.E., LEED AP, CM, Engineering & Facilities Director**
Through:	**Scott Brownlee, Deputy Director/COO** **J. Brian O'Neill, A.A.E., Executive Director/CEO**
Subject:	**Aeronautical User Infrastructure - Proposed Road/Utility Extensions – Kimley-Horn & Associates – CIP1237**
Date:	**October 19, 2021**

Proposed Motion

To approve an Authorization of Services with Kimley-Horn & Associates for Engineering Design Services for a Proposed Road and Utility Extensions, for a new Aeronautical Users Infrastructure, being developed in the southeast corner of the Airport, in an amount not to exceed $171,597 under CIP 1237.

Narrative

Over the last couple of years, interest in private development at Phoenix-Mesa Gateway Airport has gained momentum and there are currently plans being evaluated for the southern portion of the east side by a prominent aerospace developer. With the recent decision to allow for the development of a proposed private hangar/apron area on a portion of the currently undeveloped southeast corner of the Airport, PMGAA staff has determined the need for an access roadway and an extension of utilities to service this site.

This project will consist of the construction of a new roadway per City of Mesa local street commercial standards connecting between the future Williams Field Road to Ellsworth Road. This proposed roadway will also cross an existing drainage channel, utilizing an existing bridge structure at this location. The project will require the extension of proposed water/gas/electric and fiber from the future Williams Field Road Project to the proposed roadway. Project will also include an asphalt pavement section, concrete curbs, signage, pavement markings, utility improvements, grading and drainage improvements. The Engineer will also prepare an Engineer's Design Report, create contract bid documents, and provide bid phase services.

In 2019, a Request for Qualifications, 2020-007-RFQ for On-Call Engineering Services was issued. Kimley-Horn and Associates (KHA) was one of two firms selected as the most qualified. In accordance with the terms of our agreement, C-2020007-A, KHA worked with Airport staff to refine a Scope of Work for Engineering Design Services for the Proposed Road and Utility Extension Design. The cost for these services was negotiated based upon the contract fee schedule at a cost not-to-exceed $171,597.

Fiscal Impact

These Engineering Design Services will be funded by PMGAA FY22 Capital Contingency Non-Grant Funds under Project 500SDD1237.

Attachment(s): Authorization of Services, Proposal

RESOLUTION NO. 21-48

WHEREAS, the Phoenix-Mesa Gateway Airport Authority ("Authority"), a joint powers airport authority formed pursuant to Arizona Revised Statute §28-8521 *et seq.* owns and operates the Phoenix-Mesa Gateway Airport ("Airport"); and

WHEREAS the Authority desires to approve an Authorization of Services with Kimley-Horn & Associates for Engineering Design Services for a Proposed Road and Utility Extensions, for a new Aeronautical Users Infrastructure, being developed in the southeast corner of the Airport, in an amount not to exceed $171,597 under CIP 1237;

NOW, THEREFORE, BE IT RESOLVED by the Board of Directors of the Authority as follows:

> **The Board of Directors of the Authority hereby approves an Authorization of Services with Kimley-Horn & Associates for Engineering Design Services for a Proposed Road and Utility Extensions, for a new Aeronautical Users Infrastructure, being developed in the southeast corner of the Airport, in an amount not to exceed $171,597 under CIP 1237. This resolution also authorizes the Chair or Executive Director/CEO to make such additions, deletions, and changes as may be approved by the Chair or Executive Director/CEO, necessary to carry out the purposes and intent of this Resolution.**

Passed and adopted by the Authority this 19th day of October, 2021.

_____
John Giles, Chair

ATTEST:

_____
Misty Johnson, Clerk of the Board

APPROVED AS TO FORM:

_____
Jill Casson Owen, Attorney

AUTHORIZATION OF SERVICES
Kimley-Horn & Associates, AOS 20A-2202

The signing of this Authorization (Agreement) by Phoenix-Mesa Gateway Airport Authority (PMGAA) and Kimley-Horn & Associates, 7740 N. 16th Street, Suite 300, Phoenix, AZ 85020 ("Kimley-Horn"), authorizes Kimley-Horn to carry-out and complete the services described below in consideration of the mutual covenants set forth below:

1. **PROJECT**: Design of a Proposed Road and Utility Extensions under CIP 1237.

2. **SCOPE OF WORK**: Perform and provide Engineering Design Services for a Proposed Road and Utility Extensions for a new Aeronautical Users Infrastructure being developed in the southeast corner of the Airport. All services are to be performed in accordance with PMGAA Agreement C-2020-007-A, including the Standard Terms, and the attached detailed scope of work. Services shall be coordinated with and approved by PMGAA Authorized Representative prior to start of work.

3. **FEE FOR SERVICES**: The fee for services shall be based upon the attached scope of work, not to exceed One hundred seventy-one thousand, five hundred ninety-seven dollars and zero cents ($171,597), of PMGAA non-grant funds without the express written approval of PMGAA.

4. **AVAILABILITY OF PROJECT FUNDING:** The approval and continuation of this contract is subject to the availability of funds provided to, made available to, or appropriated by PMGAA for this purpose. In the event that funds are not available or appropriated for PMGAA's payment requirements under this contract for the goods and/or services to be provided hereunder, PMGAA may terminate this contract by providing notice to the consultant of the lack of the availability of funds. The consultant acknowledges and agrees that one source of funding for this contract is PMGAA funds made available, and that this contract, its approval and continuation, may contingent on the availability of those funds being made to PMGAA.

5. **INCORPORATED:** The following documents are hereby incorporated with this Authorization of Services and made part thereof:

   ☑ PMGAA Agreement C-2020007-A dated December 17, 2019.

6. **ATTACHED:** The following documents are attached to this Agreement and are incorporated herein by this reference made part thereof:

☑ Scope and Fee Proposal dated September 2021.

PMGAA and Kimley-Horn acknowledge that they are in agreement with the terms and conditions as set forth in this Authorization.

APPROVED FOR PMGAA:

By:_____

Print: J. Brian O'Neill, A.A.E.

Title: Executive Director/CEO

Date:_____

ACCEPTED FOR Kimley-Horn & Associates:

By: Steve Reeder

Print: Steve Reeder, P.E.

Title: Vice President

Date: 10/05/2021

EXHIBIT A

SCOPE OF WORK
ENGINEERING DESIGN SERVICES
for
Proposed Private Road and Utility Extensions - Design

A. PROJECT BACKGROUND AND HISTORY:

Over the last couple of years, interest in developing the northeast corner of the Phoenix-Mesa Gateway Airport (the Airport) has gained momentum, and plans for developing this portion of the Airport have been set in motion. With the recent decision to allow the development of a proposed private hangar/apron area on a portion of the currently undeveloped northeast corner, the Airport has requested design services for a proposed access roadway and extension of utilities to service the future development.

B. PROJECT DESCRIPTION:

This project will consist of the construction of a new private roadway per City of Mesa local street commercial standards (providing access to the future development) connecting between the future Williams Field Road (project by others) to Ellsworth Road. This proposed roadway will also cross an existing drainage channel (that runs along the west side of Ellsworth Road), utilizing an existing bridge structure at this location. This project will also require the extension of proposed water/gas/electric/fiber from the future Williams Field Road (project by others) to the future development, and also an asphalt roadway tie-in that connects the future Williams Field Road (project by others) to the proposed roadway. In addition to the project elements previously mentioned, this project will include asphalt pavement section, concrete curbs, signage, pavement markings, utility improvements, grading and drainage improvements. The preliminary/schematic geometry of the proposed "*Proposed Private Road and Utility Extensions*" project is shown in the Figure **below**.

Design services will be comprised of the preparation of an Engineer's Design Report, preparation of preliminary/final-review/issued-for-bid contract bid documents, and bid phase services. The project is anticipated to be bid in February 2022. Construction Administration services may be added to this project at a later date.

Preliminary Project Layout

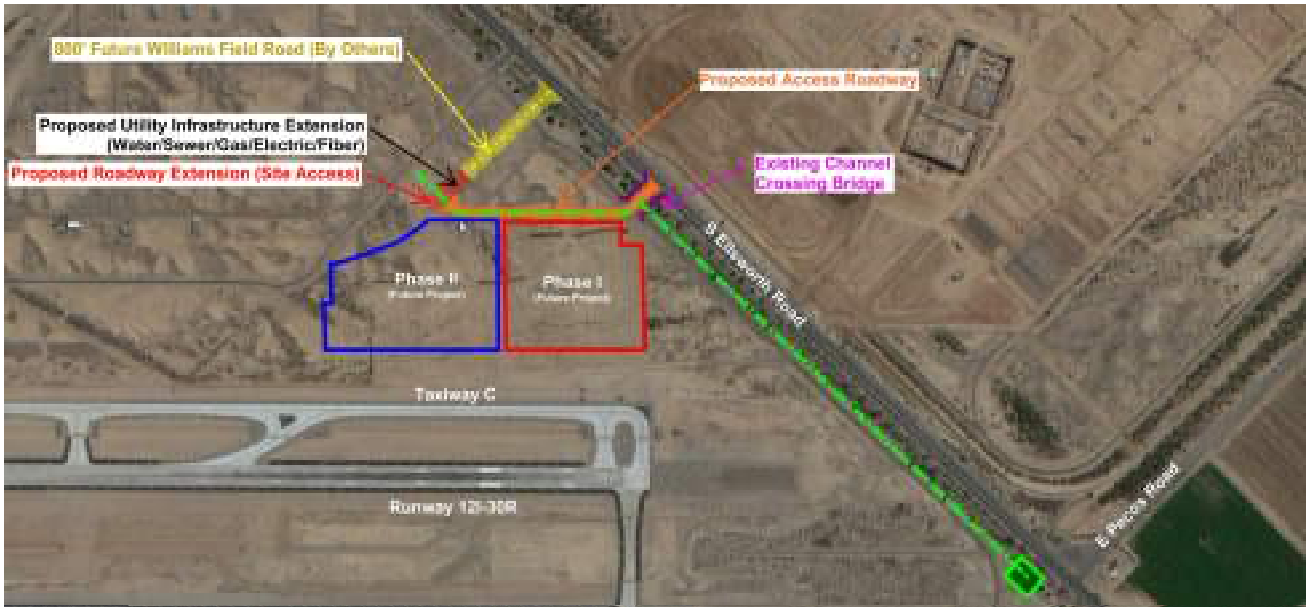

C. PROJECT SCOPE:

The specific scope of work for this Authorization of Service is identified as follows:

1. **PROJECT ADMINISTRATION:** The following general tasks are anticipated to be needed for the project.
   a) Provide project administrative tasks for support throughout the project.
   b) Provide project planning, budgeting, and initial project schedule.
   c) Provide bi-weekly progress reports, meetings and notes of project meetings.
   d) Attend (up to two) coordination and plan review meetings.

2. **PRELIMINARY SUBMITTAL (60%):** Kimley-Horn (the Engineer) will produce a draft Engineer's Design Report and Preliminary Plans (60%) of the project. The Engineer's Design Report will include a description of design methodology and other design concepts, criteria and standards used. Reference will be made to appropriate and applicable federal and state regulations. Design standards will be according to City of Mesa (City), Maricopa Association of Governments (MAG), and Manual on Uniform Traffic Control Devices (MUTCD) standards. A draft Construction Safety Plan and appropriate air study submittals will be made as required by the FAA for typical construction projects.

   Information created and determined during this effort will be used to prepare the construction plans and specifications. Information from the E-ALP/GIS project will be used as a base and to augment the survey and utility files for use on the project. As part of this task, topographic survey, utility designation and geotechnical work will be completed.

   These efforts will be done so that preliminary plans (60%) can be prepared. A limited number of preliminary plan sheets (project layout, preliminary typical section, geometrics layout and preliminary electrical layout), an outline of intended specifications, and preliminary cost estimate will be provided to display the project elements. A facilitated review meeting will be held with PMGAA, and the City if required, after the Preliminary submittal and comments will be incorporated into the next submittal.

3. **FINAL REVIEW SUBMITTAL (95%):** The Engineer will provide design and contract construction documents for the roadway and utility improvements. The Engineer will provide engineering drawings and specifications to be used as contract documents. Plan sheets will include: cover sheet, sheet index, summary of quantities, general notes and abbreviations, project layout, demolition, typical section/details, geometric layout and paving plan, utility plan, utility profiles/details, grading & drainage, plan and profiles, storm drain profiles/details, pavement markings plan/details, stormwater pollution prevention plan, electrical, and details will be prepared for the project. The Engineer will assemble owner provided front end documents, a project quantity based bid proposal, special provisions (unique project requirements), and applicable technical specifications to be used as project contract documents for the bidding process. The Engineer's Design Report will include a description of design methodology and other design concepts, criteria and standards used. Reference will be made to appropriate specifications and applicable federal and state regulations. Design standards will be according to City of Mesa, MAG, and MUTCDstandards. A draft Construction Safety Plan and appropriate air study submittals will be made as required by the FAA for typical construction projects.

   Information from the E-ALP/GIS project will be used as a base and to augment the survey and utility files for use on the project.

   Plans, specifications, engineer's design report and construction safety/phasing plan will be prepared for Final Review submittal. A facilitated review meeting will be held with PMGAA, and the City of Mesa if required, after the Final Review submittal and comments will be incorporated into the next submittal.

4. **ISSUED FOR BID SUBMITTAL (IFB):** The Engineer will provide Issued For Bid Plans, Specifications, Cost Estimate, and Construction Documents for the Proposed Private Road and Utility Extensions project.

Construction Costs: An Engineer's Opinion of Probable Construction Costs will be provided for the project and will be based on cost history for past work within the vicinity of the airfield and for projects of a similar nature. The opinion of probable cost will reflect construction during a regular construction schedule.

5. **PRE-BID ASSISTANCE SERVICES:** The Engineer will provide bidding assistance, issue contract documents to reprographics company for distribution, attend pre-bid conference, answer contractor questions, prepare addendum, tabulate bids, prepare bid summary spreadsheet, and submit to PMGAA written recommendation of award.

D. DELIVERABLES: The following deliverables will be provided according to this contract:

(1) Preliminary Plans and Specifications (Preliminary Submittal) four (4) copies to PMGAA (and one (1) copy to the City of Mesa review if required).
(2) Engineer's Design Report – four copies to PMGAA.
(3) Final Review Plans and Specifications (Final Review Submittal) four (4) copies to PMGAA (and one (1) copy to the City of Mesa review if required).
(4) Construction Safety Plan/Phasing Plan – copy with each submittal.
(5) Opinion of probable construction costs – copy with each submittal.
(6) Issued For Bid Plans and Specifications (IFB Submittal) four (4) copies to PMGAA. The Airport will provide copies of the plans to contractors for bidding purposes.
(7) Electronic drawing files to PMGAA.

E. OWNER'S RESPONSIBILITIES: PMGAA will furnish specification front end documents including, DBE, legal, bonding and other provisions as required for the contract documents. PMGAA will furnish all planning documents relevant to this project. The information will be due from PMGAA at time of service authorization. PMGAA will review the plan submittals in a timely fashion and provide written comments of the desired changes to the contract documents. PMGAA will provide all archeological and environmental clearances for the project. It is assumed that PMGAA will be providing all reviews necessary for the completion of this project and no project permitting fees will be necessary.

F. WORK SCHEDULE: Work is to be completed within five (5) months from the authorization of service date. Draft Schedule as attached.

G. CONSULTANT'S COMPENSATION FOR SERVICES: Kimley-Horn shall be compensated for services using a labor fee plus expense basis with the maximum not to exceed fee shown below. Kimley-Horn will not exceed the total maximum fee shown without authorization from the Client. Individual task amounts are provided for budgeting purposes only. Kimley-Horn reserves the right to reallocate amounts among tasks as necessary.

Design Services - $171,596.61

The derivation of engineering fee for design services are attached to this authorization as Exhibits.

Proposed Private Road and Utility Extensions
Phoenix-Mesa Gateway Airport
Phoenix-Mesa Gateway Airport Authority

DATE: September 2021

EXHIBIT I - DESIGN DOCUMENTS - ENGINEERING FEE
Proposed Private Road and Utility Extensions

DERIVATION OF COST OF PROPOSAL FEE

1. DIRECT LABOR

TASK	DESCRIPTION	MANHOURS	TOTAL	EXTENDED TOTAL
001	**Project Administration**	63.0	3,309.60	
002	**Preliminary Submittal (60%)**			
	Construction Drawings	539.0	24,700.20	
	Quantities & Cost Estimate	16.0	802.60	
	Engineering Design Report	51.0	2,481.30	
	Project Specifications	35.0	1,811.95	
003	**Final Review Submittal (95%)**			
	Construction Drawings	181.0	8,488.65	
	Quantities & Cost Estimate	11.0	534.80	
	Engineering Design Report	19.0	970.80	
	Project Specifications	17.0	970.40	
004	**Issued For Bid Submittal (IFB)**	78.0	3,917.90	
005	**Bid Phase Services**	18.0	1,009.20	
TOTAL DIRECT LABOR		1,028.0		$48,997.40

2. EXPENSES:

EXPENSE (Printing/Travel)		2,860.00	
TOTAL EXPENSES:			$2,860.00

3. CONSULTANTS:

TRACE ENGINEERING - SURVEY - ESTIMATED		5,000.00	
HARDWICK ENGINEERING - LIFT STATION SPECIALIZED ELECTRICAL SUB - ESTIMATED			
WESTERN TECHNOLOGIES INC - GEOTECHNICAL REPORT - ESTIMATED		5,000.00	
UNDERGROUND LOCATION - ALLOWANCE		500.00	
TOTAL CONSULTANTS			$10,500.00

4. ENGINEERING FEE

TOTAL LABOR		48,997.40	
OVERHEAD (%)	193.59%	94,854.07	
FEE (% OF NET)	10%	14,385.15	
CONSULTANTS		10,500.00	
EXPENSES		2,860.00	
TOTAL ENGINEERING FEE			**$171,596.61**

Proposed Private Road and Utility Extensions
Phoenix-Mesa Gateway Airport
Phoenix-Mesa Gateway Airport Authority

DATE: September 2021

EXHIBIT II - DESIGN DOCUMENTS - ENGINEERING FEE
Proposed Private Road and Utility Extensions

DERIVATION OF COST OF PROPOSAL FEE

1. Direct Salary Costs

Title	HOURS	Rate	Total Labor	EXTENDED TOTAL
Senior Project Manager (Steve Reeder/Sterling Margetts)	118	68.60	8,094.80	
Principal Engineer (Mike Norby)	2	81.50	163.00	
Electrical/Comm Engineer (Dustin Colwell)	84	59.20	4,972.80	
Professional Engineer (Jarrett Moore/Andy Whisler/Zach Schmidt)	388	49.80	19,322.40	
Analyst (Hasan Kanaan/Ally Fedor/Bradley Dawson)	304	37.15	11,293.60	
Senior Analyst/Designer (Dave Hodgson)	92	43.20	3,974.40	
Graphic Designer (Candace Peterson)	20	31.30	626.00	
Finance/Project Accountant (Andrew Hacker)	6	37.60	225.60	
Admin/Clerical (Jessica Jensen)	14	23.20	324.80	
Total Direct Salary Costs	1,028			**$48,997.40**

2. Labor and General & Administrative Overhead

Percentage of Direct Salary Costs By 193.59%	**$94,854.07**

3. Subtotal of Items 1 and 2	**$143,851.47**

4. Fixed Payment

10% of Item No. 3:	**$14,385.15**

5. Non-Salary Expenses

EXPENSE (Printing/Travel)	2,860.00	
Total Direct Non-Salary Expenses		**$2,860.00**

6. Subcontract Costs

TRACE ENGINEERING - SURVEY - ESTIMATED	5,000.00	
HARDWICK ENGINEERING - LIFT STATION SPECIALIZED ELECTRICAL SUB - ESTIMATED		
WESTERN TECHNOLOGIES INC - GEOTECHNICAL REPORT - ESTIMATED	5,000.00	
UNDERGROUND LOCATION - ALLOWANCE	500.00	
Subtotal of subcontract Costs		**$10,500.00**

7. TOTAL ENGINEERING FEE	**$171,596.61**

Proposed Private Road and Utility Extensions
Phoenix-Mesa Gateway Airport
Phoenix-Mesa Gateway Airport Authority

Kimley»Horn

Proposed Private Road and Utility Extensions

DATE: September 2021

			Senior Project Mgr.	Principal Engineer	Electrical/ Comm. Engineer	Prof. Engineer	Analyst	Senior Analyst Designer	Graphic Designer	Finance/ Project Accountant	Admin/ Clerical	TOTAL MAN-HRS	TOTAL LABOR COST
001		**Project Administration**											
	1	Project Administration-Client Coordination, Subconsultant Coordination, Supervision		4	2		6					3	15.0	$806
	2	Project Planning, Budgeting, and Initial Project Schedule, Billing		4			6				6		16.0	799
	3	Progress Reports, Bi-Weekly Meetings, Note preparation and Schedule Updates		5			8					3	16.0	811
	4	Company Quality Control Review												
		- Review Meeting after Preliminary (60%) Submittal		3		2	2					1	8.0	$447
		- Review Meeting after Final Review (95%) Submittals		3		2	2					1	8.0	$447
		Subtotal Task 001		19.0	2.0	4.0	24.0				6.0	8.0	63.0	$3,310
002		**Preliminary Submittal (60%)**											
		Construction Drawings	Sheets										
	1	Cover Sheet, Project Title Sheet	1				2	4		2			8.0	$311
	2	Index, Legend, Quantities, General Notes	2				2	4		2			8.0	$311
	3	Project Layout and Horz/Vert Control	2				4	8		2			14.0	$559
	4	Storm Water Pollution Prevention Plan and Details	3	1			6	12		2			21.0	$876
	5	Project Site and Access Plan	1	1			2	4		2			9.0	$379
	6	Demolition Plans	6	1			8	12		2			23.0	$975
	7	Typical Sections and Project Details	4	1			8	18					27.0	$1,136
	8	Geometric Layout/Paving Plans	3	2			12	18					32.0	$1,404
	9	Utility Plans	6	2		18	24	36	12				92.0	$4,254
	10	Utility Profiles	6	1		6	18	8	12				45.0	$2,136
	11	Utility Details	2	1		8	18	8					35.0	$1,736
	12	Lift Station Plans and Details												
	13	Grading and Drainage Plans	3	2			40	8	18				68.0	$3,204
	14	Storm Drain Profiles and Detail Plans	4	1			18	4	18				41.0	$1,891
	15	Roadway Plan and Profiles	3	1			20	4	18				43.0	$1,991
	16	Pavement Marking and Signage Plans	3	1			2	8		2			13.0	$528
	17	Pavement Marking and Signage Details	1				2	4		2			8.0	$311
	18	Roadway Lighting/Photometrics Plan and Details	3			12		24					36.0	$1,602
	19	Technical Supervision and Review		16									16.0	$1,098
		Subtotal	53	31.0		44.0	186.0	184.0	78.0	16.0			539.0	$24,700
		Quantities & Cost Estimate											
	1	Calculate Quantities					4	2					6.0	$274
	2	Cost Estimate												
		- Update Final Review (60%) Cost Estimates				2	4	2					8.0	$392
	3	Technical Supervision and Review		2									2.0	$137
		Subtotal		2.0		2.0	8.0	4.0					16.0	$803
		Engineering Design Report											
	1	Engineer's Report (60%)												
		- Document with summary and recommendations for civil project layout, pavement design electrical layout, sign plan and voltage calculations, drainage design, exhibits and hydraulic calculations		2		4	18	2					26.0	$1,345
	2	Construction Safety Phasing Plan Report (60%)		1			4	16					21.0	$862
	3	Technical Supervision and Review		4									4.0	$274
		Subtotal		7.0		4.0	22.0	18.0					51.0	$2,481
		Project Specifications											
	1	Project Specification-General												
		- Create Cover and Table of Contents					2	1					3.0	$137
		- Prepare Bid Proposal and Agreement												
	2	Specification - Special Provisions		3			18					4	25.0	$1,195
		- Prepare Special Conditions for Project												
	3	Supervision and Review		7									7.0	$480
		Subtotal		10.0			20.0	1.0				4.0	35.0	$1,812
		Subtotal Task 002		50.0		50.0	236.0	207.0	78.0	16.0		4.0	641.0	29,796

Proposed Private Road and Utility Extensions
Phoenix-Mesa Gateway Airport
Phoenix-Mesa Gateway Airport Authority

Proposed Private Road and Utility Extensions

DATE: September 2021

			Sheets	Senior Project Mgr.	Principal Engineer	Electrical/ Comm. Engineer	Prof. Engineer	Analyst	Senior Analyst Designer	Graphic Designer	Finance/ Project Accountant	Admin/ Clerical	TOTAL MAN-HRS	TOTAL LABOR COST
003	**Final Review Submittal (95%)**													
	Construction Drawings													
1	Cover Sheet, Project Title Sheet		1				1	1					2.0	$87
2	Index, Legend, Quantities, General Notes		2				1	2					3.0	$124
3	Project Layout and Horz/Vert Control		2				1	2					3.0	$124
4	Storm Water Pollution Prevention Plan and Details		3				1	2					3.0	$124
5	Project Site and Access Plan		1				1						1.0	$50
6	Demolition Plans		6	1			2	6					9.0	$391
7	Typical Sections and Project Details		4				4	8					12.0	$496
8	Geometric Layout/Paving Plans		3	1			4	8	2				15.0	$651
9	Utility Plans		6	1			6	12	6				25.0	$1,072
10	Utility Profiles		6	1		8	12		6				27.0	$1,399
11	Utility Details		2	1		4	2	6					13.0	$628
12	Lift Station Plan and Details													
13	Grading and Drainage Plans		3	1			12	6					19.0	$889
14	Storm Drain Profiles and Detail Plans		4	1			4			2			7.0	$330
15	Roadway Plan and Profiles		3	1			8	4		2			15.0	$678
16	Pavement Marking and Signage Plans		3				2	4					6.0	$248
17	Pavement Marking and Signage Details		1				1	2					3.0	$124
18	Roadway Lighting/Photometrics Plan and Details		3			4		4					8.0	$385
19	Technical Supervision and Review			10									10.0	$686
	Subtotal		53	18.0		16.0	62.0	67.0	14.0	4.0			181.0	$8,489
	Quantities & Cost Estimate													
1	Calculate Quantities						2	2					4.0	$174
2	Cost Estimate													
	- Update Final Review (95%) Cost Estimates					2	2	2					6.0	$292
3	Technical Supervision and Review			1									1.0	$69
	Subtotal			1.0		2.0	4.0	4.0					11.0	$535
	Engineering Design Report													
1	Engineer's Report (95%)													
	- Document with summary and recommendations for civil project layout, pavement design electrical layout, sign plan and voltage calculations, drainage design, exhibits and hydraulic calculations			1		2	8						11.0	$585
2	Construction Safety Phasing Plan Report (95%)			1			2	4					7.0	$317
3	Technical Supervision and Review			1									1.0	$69
	Subtotal			3.0		2.0	10.0	4.0					19.0	$971
	Project Specifications													
1	Project Specification-General													
	- Cover and Table of Contents						2						2.0	$100
	- Prepare Bid Tab and Agreement													
2	Specification - Special Provisions			3			6					1	10.0	$528
	- Prepare Special Conditions for Project													
3	Technical Supervision and Review			5									5.0	$343
	Subtotal			8.0			8.0					1.0	17.0	$970
	Subtotal Task 003			30.0		20.0	84.0	75.0	14.0	4.0		1.0	228.0	10,965

Proposed Private Road and Utility Extensions
Phoenix-Mesa Gateway Airport
Phoenix-Mesa Gateway Airport Authority

Kimley»Horn

Proposed Private Road and Utility Extensions

DATE: September 2021

			Senior Project Mgr.	Principal Engineer	Electrical/ Comm. Engineer	Prof. Engineer	Analyst	Senior Analyst Designer	Graphic Designer	Finance/ Project Accountant	Admin/ Clerical	TOTAL MAN-HRS	TOTAL LABOR COST
004		**Issued For Bid Submittal (IFB)**											
	1	Construction Drawings	2		6	12	20					40.0	$1,833
	2	Quantities & Cost Estimate	2		2	2	2					8.0	$430
	3	Project Specifications	2		2	18					1	23.0	$1,175
	4	Technical Supervision and Review	7									7.0	$480
		Subtotal Task 004	13.0		10.0	32.0	22.0				1.0	78.0	$3,918
005		**Bid Phase Services**											
	1	Pre-Bid Services											
	a	Issue contract documents,	2			4						6.0	$336
	b	Attend pre-bid conference, answer contractor questions, prepare addendum	4			4						8.0	$474
	c	Prepare bid tabulate / summary spreadsheet, submit recommendation of award.				4						4.0	$199
		Subtotal Task 005	6.0			12.0						18.0	$1,009
SUBTOTAL - DESIGN			118.0	2.0	84.0	388.0	304.0	92.0	20.0	6.0	14.0	1,028.0	48,997

Phoenix-Mesa Gateway Airport Authority
5835 S Sossaman Road
Mesa, Arizona 85212-6014
www.gatewayairport.com

Management Information Report

To: Board of Directors
From: Chuck Odom, Chief Financial Officer
Through: J. Brian O'Neill, A.A.E., Executive Director/CEO
Re: August 2021 Financials
Date: October 19, 2021

Attached is the monthly Financials Report for August 2021.

Phoenix-Mesa Gateway Airport Authority
AIRPORT - All Operations P&L
August, 2021

	Month of August 2021				Y-T-D as of August 2021			
	August FY21 Actual	August FY22 Actual	YOY Variance	B/(W)	YTD FY21 Actual	YTD FY22 Actual	Y-T-D Variance	B/(W)
Aeronautical Operating Revenues								
Aircraft Parking	23,456	26,672	3,216	14%	38,636	45,611	6,975	18%
Fuel Flowage Fees	80,331	49,139	(31,192)	-39%	134,585	97,101	(37,484)	-28%
Landing Fees	171,790	121,584	(50,206)	-29%	265,407	264,618	(789)	0%
Lease Income Aero	204,415	245,118	40,703	20%	502,428	601,248	98,820	20%
Fuel Sales	438,018	412,850	(25,168)	-6%	826,722	827,394	672	0%
Services Sold - Aero	643,578	330,189	(313,389)	-49%	1,081,727	777,346	(304,381)	-28%
Sub-total Aero Operating Revenues	1,561,588	1,185,552	(376,036)	-24%	2,849,505	2,613,318	(236,187)	-8%
Non-Aeronautical Operating Revenues								
Concessions	52,081	76,360	24,279	47%	101,293	150,583	49,290	49%
Lease Income Non-Aero	105,573	127,045	21,472	20%	210,789	243,648	32,859	16%
Parking	232,428	369,509	137,081	59%	535,605	883,050	347,445	65%
Rental Car Fees	56,010	103,132	47,122	84%	125,934	213,066	87,132	69%
Svcs Sold - Non Aero	6,779	7,130	351	5%	11,150	8,498	(2,652)	-24%
Sub-total Non-Aero Operating Revenues	452,871	683,176	230,305	51%	984,771	1,498,845	514,074	52%
Total Operating Revenues	**2,014,459**	**1,868,728**	**(145,731)**	**-7%**	**3,834,276**	**4,112,163**	**277,887**	**7%**
Operating Expenses								
Costs of Goods Sold	236,047	267,112	(31,065)	-13%	440,474	539,682	(99,208)	-23%
Personnel	644,903	680,060	(35,157)	-5%	1,311,014	1,483,113	(172,099)	-13%
Comm & Utilities	117,117	104,491	12,626	11%	211,504	210,329	1,175	1%
Contractual Services	342,816	367,580	(24,764)	-7%	726,082	782,497	(56,415)	-8%
Insurance	38,714	45,854	(7,140)	-18%	83,716	96,078	(12,362)	-15%
Other	4,080	17,607	(13,527)	-332%	18,624	38,344	(19,720)	-106%
Repair & Maintenance	16,033	50,187	(34,154)	213%	44,386	93,685	(49,299)	-111%
Supplies & Materials	39,113	70,540	(31,427)	-80%	106,067	172,372	(66,305)	-63%
Air Service Incentives [2,000,000]	0	0	0	0	0	0	0	0
Operating Contingency [2,353,258]	0	0	0	0	0	0	0	0
Total Operating Expenses	**1,438,823**	**1,603,431**	**(164,608)**	-11%	**2,941,867**	**3,416,100**	**(474,233)**	-16%
Operating Income (Loss)	**575,636**	**265,297**	**(310,339)**	-54%	**892,409**	**696,063**	**(196,346)**	-22%
	28.6%	14.2%			23.3%	16.9%		
Depreciation		1,414,614				2,834,514		

ARPA Act Recovery	0	
CRRSAA Act Recovery	4,175,991	Fully Drawn
CARES Act Recovery	20,530,277	Fully Drawn
Total Recovery-to-Date	24,706,268	

Phoenix-Mesa Gateway Airport Authority
5835 S Sossaman Road
Mesa, Arizona 85212-6014
www.gatewayairport.com

Management Information Report

To: **Board of Directors**
From: **Chuck Odom, Chief Financial Officer**
Through: **J. Brian O'Neill, A.A.E., Executive Director/CEO**
Re: Solicitation Notification
Date: **October 19, 2021**

This report is to provide notification of the active and upcoming solicitations to help ensure compliance with the Phoenix-Mesa Gateway Airport Authority procurement transparency clause. The active activities include the following:

Active/Pending Solicitations

Type Solicitation	Number	Title	Anticipated Contract Award (Board Action)
Request for Proposals	2022-007-RFP	Fueling Stands	October 2021
Request for Proposals	2022-003-RFP	Parking Access Revenue Control System	November 2021
Request for Qualifications	2022-006-RFQ	Rental Car Care Facility Design Services	November 2021
Request for Proposals	2022-001-RFP	Master Developer, Gateway*East*	November 2021
Request for Proposals	2022-011-RFP	Pre-Conditioned Air Units	November 2021

Future Solicitations

Type Solicitation	Number	Title	Scheduled for Release	Anticipated Contract Award (Board Action)
Invitation for Bid	2022-004-IFB	Taxiway W Rehabilitation	October 2021	November 2021
Request for Qualifications	2022-005-RFQ	Fabrication and Installation of Signs	October 2021	December 2021
Request for Proposals	2022-012-RFP	On-Call Videography & Drone Videography Services	October 2021	January 2022

If you have any questions about the solicitations or the procurement process, please feel free to contact me at 480-988-7613.

Phoenix-Mesa Gateway Airport Authority
5835 S Sossaman Road
Mesa, Arizona 85212-6014
www.gatewayairport.com

Management Information Report

To: Board of Directors
From: Chuck Odom, Chief Financial Officer
Through: J. Brian O'Neill, A.A.E., Executive Director/CEO
Re: Contract Extension – Car Rental Concession Agreements
Date: October 19, 2021

This report is to provide notification that Airport staff has extended the Car Rental Concession Agreements for both The Hertz Corporation and Enterprise Holdings. The original agreement expiration date was November 30, 2018 and both parties agreed to exercise the three 1-year extension options, making the current expiration date November 30, 2021. Staff is recommending an amendment to the existing Agreements to provide an additional Term extension which, if exercised, would extend the Term of the Car Rental Concession Agreements to May 2023. Staff's justification for the proposed amendment and associated extension of Term is 1) Staff did not believe the business climate in 2021 was advantageous to the Airport for a competitive solicitation of new rental car concession agreements, and 2) the Airport has identified some critical, necessary improvements to rental car facilities and is currently working on those improvements that would greatly enhance future rental car operations at the Airport.

Staff anticipates releasing a formal solicitation for Car Rental operators in the Fall of 2022 to obtain competitive proposals and ensure there is continuity in service from Car Rental operators at the Airport.

NOTICE AND AGENDA OF MEETING OF THE
PHOENIX-MESA GATEWAY AIRPORT AUTHORITY
BOARD OF DIRECTORS

Pursuant to A.R.S. § 38-431.02, notice is hereby given to the members of the Phoenix-Mesa Gateway Airport Authority and to the public that the Phoenix-Mesa Gateway Airport Authority will hold a meeting open to the public on **Tuesday, November 16, 2021 beginning at 9:00 a.m.** in the Board Room (Saguaro A & B) of the Gateway Administration Building, 5835 South Sossaman Road, Mesa, Arizona. Members of the Phoenix-Mesa Gateway Airport Authority may attend either in person or by telephone. The Board may vote to hold an executive session for the purpose of obtaining legal advice from the Board's attorney on any matter listed on the agenda pursuant to A.R.S. § 38-431.03 (A)(3)&(4).

The agenda for the meeting is as follows:

1. **Call to Order** (Councilmember Jim Waring, Vice Chair)
   Members of the Phoenix-Mesa Gateway Airport Authority will attend either in person or via videoconference.

2. **Roll Call** (Councilmember Jim Waring, Vice Chair)

3. **Pledge of Allegiance**

4. **Call to the Public**
   Members of the Board may not discuss items that are not on the agenda. Therefore, action taken as a result of public comment will be limited to directing staff to study the matter or scheduling the matter for further consideration and decision at a later date. Maximum of three minutes per speaker.

5. **Executive Director's Report** - J. Brian O'Neill, A.A.E., Executive Director/CEO

6. **Car Rental Return Lot and Car Care Facility Presentation** - Bob Draper, Engineering and Facilities Director

7. **Consent Agenda**

   a) **Minutes** of the Board Meeting held on October 19, 2021.

   b) **Resolution No. 21-49 –** Authorizing annual changes to the **Airport Rules and Regulations**.

   c) **Resolution No. 21-50 –** Authorizing the purchase of two (2) skid mounted Preconditioned Air Units (PCAir) from **ITW GSE, Inc**. in an amount not to exceed $190,159.44 under CIP 1214.

   d) **Resolution No. 21-51 –** Authorizing the procurement of server equipment from **Dell Marketing, L.P. (Dell)** in an amount not to exceed $72,862.47.

Consideration and Possible Approval of:

8. **Resolution No. 21-52 –** Approving a Professional Services Agreement with **TranSystems Corporation** for Design Services for the Rental Car Care Facility Improvements, in an amount not to exceed $390,532 under CIP 1222 and to approve an increase to the FY22 Capital Budget by this same amount funded through Customer Facility Charges (CFC).

9. **Board Member Comments/Announcements**

10. Next Meeting: Tuesday, December 21, 2021 at 9:00 a.m.

11. Adjournment

Persons with a disability may request a reasonable accommodation, such as a sign language interpreter, by contacting Misty Johnson at 480-988-7607 or mrjohnson@gatewayairport.com. Requests should be made as early as possible to allow time to arrange the accommodation.

Phoenix-Mesa Gateway Airport

- **Gulfstream Aerospace Corporation Announces Major Investment at Gateway Airport**
- **Queen Creek Officials Tour New Air Traffic Control Tower**
- **SkyBridge Arizona Designing $25-40MM in Horizontal Infrastructure Improvements**

Executive Director's Report

November 2021

Financial Snapshot

OPERATING INCOME	September		Month Variance	FYTD Comparison		FYTD Variance
	FY21	FY22		FY21	FY22	
Revenues	$1,635,975	$1,662,938	$26,963	$5,470,251	$5,775,100	$304,849
Less Expenses	$1,559,182	$1,874,459	$315,277	$4,486,705	$5,290,560	$803,855
Operating Income *(before depreciation)*	**$76,793**	**($211,521)**	**($288,314)**	**$983,546**	**$484,540**	**($499,006)**

Investment Fund Balances: As of September, the Local Governmental Investment Pool (LGIP) 700 = $19,055,257; Wells Fargo; Collateralized Money Market = $326,547 and Collateralized CD's = $42,369,799; Total $61,751,603. The month-over-month decrease was attributable to investment market adjustments of ($49,064). The decrease in market value affected both the LGIP and Collateralized CD's.

Finance and Accounting

Phoenix-Mesa Gateway Airport Authority (PMGAA, Authority) reported a net operating loss of $211,521 during September 2021. A monthly loss in September is not uncommon. Since fiscal year (FY) 2009, 10 of 14 September's have reported an operating loss. The absence of any U.S. Forest Service activity, which is a good thing for Arizona, resulted in less revenue generated by fuel sales during the month. Fiscal-year-to-date 2022 (FYTD22), non-aeronautical revenues have improved by 45% due to the return of leisure air travelers and Phoenix-Mesa Gateway Airport's (Airport, Gateway Airport) record-setting passenger activity.

Through the end of September, PMGAA has submitted a total of $4,175,991 for Coronavirus Response and Relief Supplemental Appropriation Act of 2021 (CRRSAA) operating grant reimbursements. This depletes PMGAA's CRRSAA grant allocation. PMGAA's grant application for American Rescue Plan Act (ARPA) funding has been completed, submitted, and acknowledged as received by the Federal Aviation Administration (FAA). PMGAA's ARPA allocation is $8,222,781.

PMGAA Solicitations

Active/Pending Solicitations

TYPE OF SOLICITATION	Number	Title	Anticipated Contract Award
Request for Proposals	2022-003-RFP	Parking Access Revenue Control System	November 2021
Request for Qualifications	2022-006-RFQ	Rental Car Care Facility Design Services	November 2021
Request for Proposals	2022-011-RFP	Pre-Conditioned Air Units	November 2021
Request for Proposals	2022-001-RFP	Master Developer for Gateway***East***	December 2021
Request for Proposals	2022-012-RFP	On-Call Videography & Drone Videography Services	January 2022

Future Solicitations

TYPE OF SOLICITATION	Number	Title	Scheduled for Release
Invitation for Bid	2022-004-IFB	Taxiway W Rehabilitation	November 2021
Request for Qualifications	2022-005-RFQ	Fabrication & Installation of Signs	November 2021
Request for Qualifications	2022-013-RFQ	On-Call Environmental Services	December 2021

Airport Operations

Fiscal Year 2021 PMGAA Highlights

Air Service Development

- WestJet (returning this fall)
- Swoop (returning this fall)
- Flair (returning this fall)
- Sun Country (initiating new service this fall)
- Allegiant announced 12 new destinations

Private Investment

- SkyBridge Arizona
  - 53,000 SF Industrial Building (completed)
  - 82,500 SF Hangar (completed)
  - 127-Room Hotel (under design)
- 50,000 SF Wetta Ventures Hangar (completed)
- 65,000 SF APS HQ/Hangar (completed)
- 183,000 SF Gateway Executive Airpark Hangar Complex (under construction)
- New Panera Bread Food Concession in Commercial Passenger Terminal (completed)
- Gateway*East* Master Developer Solicitation (underway)

PMGAA Construction Projects

- Ellsworth Channel and Hawes Road Bridge (completed)
- Taxiway Kilo Relocation (completed)
- Daily Parking Lot Resurfacing (completed)
- North Remain Overnight (RON) Pad (completed)
- Terminal Passenger Channelization (completed)
- Installation of 20,000 Gallon Fuel Storage Tank (completed)
- Air Traffic Control Tower (under construction)
- New Cell Phone Lot (under construction)
- Alpha Apron Phase III (under construction)
- Terminal Employee Parking Lot (designed)
- Rental Car Return Lot (designed)
- Rental Car Care Facility (under design)
- Five-Gate Terminal Addition (under design)
- Alpha Apron Phase IV (under design)

PMGAA Updates its Strategic Business Plan

PMGAA has updated its Strategic Business Plan to better reflect current aviation industry conditions and the dynamic global economic environment. The Plan guides PMGAA staff as they strive to achieve the seven strategic organizational goals identified by the PMGAA Board of Directors: Increase Air Service; Maintain a High Level of Community Support; Strengthen Financial Sustainability; Invest in People & Operational Assets; Attract Commercial Development; Plan, Build & Maintain Infrastructure; and Promote Regional Tourism.

Operations Statistics

PASSENGER COUNTS		September		% Change	FYTD		% Change
		FY21	FY22		FY21	FY22	
Passengers	TOTAL	**65,067**	**93,882**	**44%**	**231,552**	**362,923**	**57%**
	Deplaned	33,090	47,648	44%	117,717	184,315	57%
	Enplaned	31,977	46,234	45%	113,835	178,608	57%
Allegiant	Scheduled	64,953	93,324	44%	231,388	356,675	54%
WestJet	Scheduled	0	0	0%	0	0	0%
Swoop	Scheduled	0	241	100%	0	241	100%
Avelo	Scheduled	0	0	0%	0	4,873	100%
Elite/Swift	Charter	114	317	178%	164	1,134	591%

OPERATIONS	September		% Change	FYTD		% Change
	FY21	FY22		FY21	FY22	
Air Carrier	671	861	28%	2,558	3,027	18%
Military	226	198	-12%	659	783	19%
General Aviation	25,561	18,830	-26%	60,718	51,830	-15%
TOTAL	**26,458**	**19,889**	**-25%**	**63,935**	**55,640**	**-13%**

PMGAA Team Member Spotlight

Employee Name: **Josh Kappes**
Employee Title: **Line Service Specialist II**
PMGAA Department: **Gateway Aviation Services**
Years with PMGAA: **11**

What are your job responsibilities for PMGAA? I keep the lifeblood of the airport flowing. I calculate required fuel inventories, order and receive into storage half of the 20+ million gallons the airport uses, and complete FAA and airline required inspections on all the airport's fuel equipment.

What is your most memorable Gateway Airport moment? Hands down the best memory I have here comes from my first encounter with the Antonov AN-124. The inside of the belly is massive, and the wings cover 6,760 square feet! Driving a forklift in and out of the nose of that beast is a perspective I'll not soon forget.

What is something people may not know about you? I spend about 6 hours a week at Topgolf Gilbert yet am a mediocre golfer at best. I really enjoy the view and that one-in-a-hundred amazing connection. Also, it removes the step where I have to search for my golf ball in the rough. That's my favorite part.

Gateway Aviation Services

During the month of September 2021, Gateway Aviation Services (GAS), the PMGAA-operated FBO, pumped almost 1.2 million gallons of aviation fuel, a 6% decrease compared to last September mainly due to no U.S. Forest Service activity during the month. YTD22, GAS has pumped over 4.2 million gallons of aviation fuel, a 5% decrease compared to the same time period last fiscal year.

FUEL (Gallons)	September			FYTD		
	FY21	FY22	% Change	FY20	FY21	% Change
AvGas	65,295	41,150	-37%	163,507	108,109	-34%
Retail Jet A	39,151	34,667	-11%	115,850	116,912	1%
Contract	371,901	239,904	-35%	1,309,050	833,270	-36%
Commercial	778,279	867,643	11%	2,865,743	3,184,834	11%
TOTAL	1,254,626	1,183,364	-6%	4,454,150	4,243,125	-5%

Engineering and Planning

SkyBridge Arizona Designing Horizontal Infrastructure

Conceptual Design of Full Buildout of SkyBridge Arizona

SkyBridge Arizona is a 360-acre master development comprised of both aeronautical and non-aeronautical development opportunities. As part of Mesa SkyBridge, LLC's agreement with PMGAA, they are required to invest between $25 - $40MM in horizontal infrastructure including a taxi lane extension, entrance and circulation roadways, and utilities – electricity, sewer, water, and fiber.

SkyBridge Arizona has hired a local engineering company to assist with the design of Phase I improvements and has engaged PMGAA's Engineering and Facilities Department to ensure that all horizontal infrastructure plans meet federal, state, and local design guidelines and construction standards.

Community Noise Report

During the month of September 2021, PMGAA received aircraft noise calls from a total of seven area residents, compared to five callers during September last year. PMGAA prides itself on working closely with area residents to try to address their concerns about noise being generated by aircraft flying above the Phoenix East Valley. Sometimes, the aircraft raising concerns aren't even using Gateway Airport, but arriving or departing from other Phoenix area airports. The PMGAA Community Relations Team does a great job answering questions, identifying aircraft, and educating callers about aircraft overflight patterns.

CALLERS	September		FYTD	
	FY21	FY22	FY21	FY22
Total	5	7	26	30

AIRCRAFT TYPE	September		FYTD	
	FY21	FY22	FY21	FY22
	Callers	Callers	Callers	Callers
Commercial	2	5	11	24
GA Total	3	0	12	2
Helicopter	0	0	0	0
Military	0	2	3	4
Total	5	7	26	30

LOCATION	September		FYTD	
	FY21	FY22	FY21	FY22
Mesa	1	4	7	9
Gilbert	1	3	5	17
Gold Canyon	1	0	6	0
Queen Creek	1	0	5	2
Queen Valley	1	0	2	1
San Tan Valley	0	0	0	0
Apache Junction	0	0	0	1
Chandler	0	0	1	0
TOTAL	5	7	26	30

Business Development

Gulfstream Aerospace Corporation Announces Major Investment at Gateway Airport

Rendering of New Gulfstream Aerospace Corporation Hangar and Office Complex at Gateway Airport

Great News for Gateway Airport, Greater Phoenix, and the State of Arizona!

Gulfstream Aerospace Corporation, a world leader in business jet aircraft manufacturing and maintenance, has announced they will be constructing a new West Coast Service Facility at Gateway Airport, bringing hundreds of high-wage jobs to the Phoenix East Valley. Gulfstream joins Cessna – A Textron Company, Embraer, and Able Aerospace Services – A Textron Company, all of whom have service facilities on the airfield.

Phase I of the new Gulfstream facility will include a large hangar and three-story office building on approximately 18 acres located on the east side of the Airport adjacent to Ellsworth Road and the future Williams Field Road interchange off the expanding SR24.

Gulfstream was founded in 1958, is headquartered in Savannah, GA, and has approximately 14,000 employees worldwide. WELCOME TO GATEWAY AIRPORT GULFSTREAM!

New Tripadvisor Concession Opens at Gateway Airport

Conceptual Design of New Tripadvisor at Gateway Airport

In an effort to stay ahead of record-setting passenger growth, PMGAA is adding new food, beverage, and retail/news & gift concessions in Gateway Airport's commercial passenger terminal. During the past two years, the Airport has opened a couple of new concessions – O.H.S.O. Brewery, Panera Bread, and Saguaro Mercantile – designed to improve service offering to air travelers and terminal employees.

The most recent concession to open is the new Tripadvisor retail/news & gift shop located between Gates 4 & 5. Tripadvisor offers greatly expanded food and drink offerings, lots of technology gadgets, and local Arizona products. Next time you're traveling through Gateway Airport, make sure to visit Tripadvisor before your flight.

Marketing and Community Relations

Queen Creek Officials Tour New Air Traffic Control Tower

Gateway Airport is owned by the Cities of Mesa, Phoenix, and Apache Junction; the Towns of Gilbert and Queen Creek; and the Gila River Indian Community. PMGAA's Board of Directors and its Member Communities take great pride in developing and improving the Airport, helping create high-wage jobs across the Phoenix East Valley, and bringing lots of sun-seeking visitors to Arizona to spend money on ground transportation, lodging, restaurant visits, retail purchases, outdoor activities, and entertainment.

Queen Creek Officials Tour New Air Traffic Control Tower

Officials from the Town of Queen Creek recently visited the Airport to tour the new Air Traffic Control Tower (ATCT, Tower) currently under construction and get a birds-eye view of all the private development popping up on and around the Airport.

A big "Thank You" to Mayor Gail Barney, Vice Mayor Dawn Oliphant, Councilmember Jeff Brown, and Intergovernmental Relations Manager Heather Wilkey for their interest in the many projects underway at Gateway Airport. Your leadership and support are greatly appreciated!

MINUTES OF PUBLIC MEETING OF THE
PHOENIX-MESA GATEWAY AIRPORT AUTHORITY
BOARD OF DIRECTORS | October 19, 2021

A public meeting of the Phoenix-Mesa Gateway Airport Authority (PMGAA) was convened on Tuesday, October 19, 2021, beginning at 9:00 a.m. in the Board Room (Saguaro A&B) of the Gateway Administration Building, 5835 S Sossaman Road, Mesa, Arizona.

Members Present

Mayor John Giles, Mesa
Councilmember Jim Waring, Phoenix (*via videoconference*)
Mayor Brigette Peterson, Gilbert
Mayor Chip Wilson, Apache Junction
Lt. Governor Monica Antone, Gila River Indian Community Junction (*via videoconference*)
Mayor Gail Barney, Queen Creek

** Neither present nor represented*

Airport Staff Present

J. Brian O'Neill, Executive Director/CEO
Scott Brownlee, Deputy Director/COO
Chuck Odom, CFO
Misty Johnson, Clerk of the Board
Jill Casson Owen, Attorney

1. **Call to Order** at 9:02 a.m. (Mayor Giles)

2. **Roll Call**

3. **Pledge of Allegiance**

4. **Motion to convene into Executive Session**
   a) Pursuant to A.R.S. § 38-431-03 (A)(1), the Board of Directors may convene into executive session for the purpose of discussion and consideration regarding the Executive Director/CEO's annual review.
   b) Pursuant to A.R.S. § 38-431-03 (A)(7), the Board of Directors may convene into executive session for the purpose of discussion and consideration regarding the purchase, sale, or lease of real property and discussion and consideration of a real estate lease transaction.

   Mayor Brigette Peterson moved to convene into Executive Session.
   Mayor Chip Wilson seconded the motion.
   The motion was carried unanimously.

5. **Motion to Reconvene from Executive Session to Regular Session (9:50 a.m.)**

   Mayor Brigette Peterson moved to reconvene the PMGAA Board of Directors meeting.
   Mayor Chip Wilson seconded the motion.
   The motion was carried unanimously.

6. **Call to the Public**
   There were no public comments.

DRAFT

7. **Executive Director's Report** J. Brian O'Neill, A.A.E., Executive Director/CEO

Executive Director O'Neill provided a briefing on PMGAA financial performance, passenger activity, the community noise report, and various Airport projects.

- Fiscal Year-to-Date (FYTD) Net Operating Income is $696,063.
- Commercial passenger activity at Gateway Airport continues to increase with three of the last four months setting records for passenger activity as leisure travelers return to the skies. Numerous flights being added by Allegiant this winter combined with the return of Flair, WestJet, Swoop, and the new entrance of Sun Country will make for a very busy and successful winter season.
- The 2021 PMGAA Strategic Business Plan identifies seven strategic organizational goals acknowledged by the Board to guide the continued development of PMGAA. 1) Increase Air Service; 2) Maintain a High Level of Community Support; 3) Strengthen Financial Sustainability; 4) Invest in People & Operational Assets; 5) Attract Commercial Development; 6) Plan, Build & Maintain Infrastructure; and 7) Promote Regional Tourism. This document will guide staff in the development of tactical plans to move the Airport forward during FY22 and beyond.
- The FY22 PMGAA Program of Work is a blueprint for Authority employees to follow as they strive to successfully reach the Strategic Goals identified by PMGAA's Board of Directors.
- The Phoenix is the current retail concession located in the terminal across from the Copper Plate restaurant. It is being renovated into a modern, high-quality brand called Tripadvisor that is located in many airports across the country. The new retail/news & gift concession is scheduled to open in the beginning of November.
- PMGAA is currently designing a new five-gate terminal addition that will connect to the to the main terminal creating one unified commercial passenger terminal consisting of 11 gates. PMGAA is hoping to secure a grant from the Bipartisan Infrastructure Bill to construct this important project.
- The Air Traffic Control Tower is on-track to be commissioned in the summer of 2022.
- PMGAA is preparing to expand aircraft parking opportunities at the south end of the airfield. Alpha Apron Phase III is under construction and Phase IV is in design and will be ready for construction once Phase III is complete.
- PMGAA has constructed a new cell phone lot at the intersection of Ray and Sossaman Roads. The previous cell phone lot will be repurposed into a new parking lot for terminal tenant employees. This important project will free up revenue spaces currently being used by 150 terminal tenant employees in the Daily Parking Lot.
- The block construction walls are going up for Gateway Executive Airpark's 183,000 SF hangar complex. This impressive three-hangar project is comprised of both multi-tenant and single tenant lease opportunities. This project is being built on spec to meet the growing demand for larger hangar space for corporate and private aircraft.
- Gateway***East*** is a 400-acre mixed use non-aeronautical master development opportunity located on the east side of the Airport. The Gateway***East*** Master Developer solicitation continues. The RFQ process had 12 highly qualified submissions. The top four submissions were invited to participate in an RFP process. The interview process was held in September with two finalists selected. The two finalists are being asked to present their best and final proposal. PMGAA plans to have a master developer for Gateway***East*** selected by the end of 2021.

8. **Presentation: Audited Financials –** Sandra Cronstrom, Principal CliftonLarsonAllen, LLP

Ms. Cronstrom provided a brief overview of the Fiscal Year 2021 Audited Financials, resulting in an issuance of an unmodified (clean) opinion for the Phoenix-Mesa Gateway Airport Authority. No material audit adjustments were made.

Chuck Odom, PMGAA CFO thanked Ms. Cronstrom for coming out today to present to the Board. Executive Director O'Neill thanked the finance team for their efforts in this successful independent audit.

9. **Consent Agenda**

a) **Minutes** of the Board Meeting held on **September 21, 2021.**

b) **Resolution No. 21-42 –** Authorizing Phoenix-Mesa Gateway Airport Authority's (PMGAA's) insurance broker, **USI Insurance Services LLC**, to purchase benefit plans (medical, dental, vision, basic life/accidental death & dismemberment, and short-term disability) from various carriers. This consists of a 12-month renewal January 1, 2022 through December 31, 2022 with an estimated plan cost of $1,319,386.

c) **Resolution No. 21-43 –** Authorizing the Third Amendment to the Car Rental Concession Agreement with **Enterprise Leasing Company of Phoenix, LLC**.

d) **Resolution No. 21-44 –** Authorizing the First Amendment to the Car Rental Concession Agreement with the **Hertz Corporation**.

e) **Resolution No. 21-45 –** Authorizing the purchase of five fueling stands from **WSW Corp. dba WAAG (WAAG)** in an amount not to exceed $59,018.41.

f) **Resolution No. 21-46 –** Authorizing an amendment to the **Executive Director/CEO employment contract effective October 1, 2021**.

g) **Resolution No. 21-47 –** Approving an Authorization of Services with **Dibble Engineering** for Engineering Design Services for the Center RWY 12C/30C Design and Reconstruction Project in an amount not to exceed $569,673 under CIP 1202.

h) **Resolution No. 21-48 –** Approving an Authorization of Services with **Kimley-Horn & Associates** for Engineering Design Services for a Proposed Road and Utility Extensions, for a new Aeronautical Users Infrastructure, being developed in the southeast corner of the Airport, in an amount not to exceed $171,597 under CIP 1237.

Mayor Gail Barney moved to approve the Consent Agenda.
Mayor Chip Wilson seconded the motion.
The motion was carried unanimously.

10. **Board Member Comments/Announcements.**

There were no comments or announcements.

11. **Next Meeting: Tuesday, November 16, 2021** at 9:00 a.m. in the Board Room (Saguaro A&B) of the Gateway Administration Building, 5835 S Sossaman Road, Mesa, Arizona. Members of the Phoenix-Mesa Gateway Airport Authority may attend either in person or by telephone/videoconference.

12. **Adjournment.**
    The meeting adjourned at 10:09 a.m.

Dated this _____ day of _____ 2021.

_____
Misty Johnson, Clerk of the Board

Phoenix-Mesa Gateway Airport Authority
5835 S Sossaman Road
Mesa, Arizona 85212-6014
www.gatewayairport.com

Board Action Item

Re: Resolution 21-49

To:	**Board of Directors**
From:	**Margi EvanSon, Operations & Maintenance Director**
Through:	**Scott Brownlee, Deputy Director/COO**
	J. Brian O'Neill, A.A.E., Executive Director/CEO
Subject:	**Annual Review: Rules & Regulations**
Date:	**November 16, 2021**

Proposed Motion
To approve annual changes to the "Airport Rules and Regulations".

Narrative
The "Airport Rules and Regulations" is reviewed annually to ensure consistency and effectiveness and to keep our organization up to date with industry best practices.

Pending approval, the "Airport Rules and Regulations" revisions are summarized as follows:

1. As referenced in section 1.4, the Executive Director may designate personnel to enforce Airport Rules and Regulations through Airport Staff and the City of Mesa Police Department as applicable, therefore "or designee" was removed from sections **2.14, 3.5, 3.11, 5.6 and 6.10.**

2. **Chapter 2 – General Rules and Regulations, sections:**
   2.1 Abandonment of Property, reformatted A.R.S. reference.
   2.11 Loitering, addition of section.

3. **Chapter 3 - Aircraft Operations, sections:**
   3.2 Aircraft/Airport Operations during Hours of Tower Closure, changed "Air Operations Area (AOA)" to "movement area".
   3.5 Engine Run-ups, c. addition of last sentence regarding safety flagger, d. addition of line 4.
   3.8 General Operating Rules, c. changed "intoxicating liquor or any narcotic" to "alcohol or drugs".
   3.11 Parking of Aircraft, c. added "hazard".
   3.13 Specialized Aeronautical Activities, added "banner-tow operations".
   3.14 Taxiing or Towing of Aircraft, addition of lines e. and f.
   3.18 Terminal Common Use Facility, addition of section.

3. **Chapter 4 – Vehicle Operations, sections:**
   4.2 Emergency Right of Way, clarification of vehicle movement inside the restricted area.
   4.8 Moving of Motor Vehicles, addition of "unauthorized".
   4.9 Parking, g. clarification of passenger vehicles.
   4.11 Restricted Area Operations, f. addition of "rotating beacon," g. changed "ramp" to "apron".

4. **Chapter 5 – Fueling, Fire and Environmental Safety, sections:**
   5.1 Aircraft Fueling Operations, j. changed "three" to "five".
   5.2 Aircraft Fuel Storage Facility Requirements, changed "sell" to "dispensing".
   5.3 Inspection of Fuel Facilities, Records, Meter Readings, and Reporting, b, line 1. removed,

c. "Board" replaced with "Executive Director/CEO".
5.4 Self-Fueling Operations-Aircraft, b. revised to consolidate c and d.
5.5 Self-Fueling Operations-Automotive Vehicles and Equipment, "gasoline" replaced with "fuel" and "diesel" added.
5.8 Fire Equipment, addition of "Airport" and "relocated".
5.9 Hazardous Material Spills, removed "or", both Mesa Fire and Airport Ops must be notified.
5.10 Open Flames, removed "Executive Director".

5. **Chapter 6 – Leases & Tenant Operations, sections:**
6.7 Free of Debris, added last sentence "Tenants shall clear FOD in AOA generated from their premises, vehicles or equipment."
6.8 Hangar Storage, a. addition of 38906 policy.
6.10 Marking of Paved Areas, addition of measured drawings requirement.
6.11 Preservation of Property, addition of "hangar 24, ASR, fence".
6.13 Storage and Equipment, addition of last sentence regarding litter free area.
6.15 Trash Containers, addition of prevention of wildlife information.

6. **Chapter 7 -Security Requirements, sections:**
7.4 Aviation Repair Station, addition of section.
7.6 Doors and Gates, d. revisions of access areas.
7.10 Identification Media and Access Cards, addition of line e.
7.14 Tailgating/Piggybacking, changed "gate" to "portal", addition of doors.
7.16 Violation of Security Regulations, addition of revocation of media access and denial information.

7. **Chapter 8 -Special Events, sections:**
8.5 Damages, clarification of payment for expenses.

8. **Chapter 9 -Ground Transportation, sections:**
9.8 Miscellaneous Provisions, a. additional detail regarding prompt repairs.

9. **Appendix A: Definitions**
Airport Restricted Area(s)/ Restricted Area(s): definition added.
Airport Security Program definition revised.
Emergency Vehicles definition revised.
Executive Director/CEO definition revised.
General Aviation definition revised.
Incident Commander definition revised.
Restricted Area definition removed.
Secured Area definition revised.
Soliciting definition revised.
Sterile Area definition revised.

The revised "Airport Rules and Regulations" was posted and available to view on our www.gatewayairport.com website and a letter was sent to our tenants on September 28, 2021 notifying them of our proposed revisions and to allow our tenants and other users of Phoenix-Mesa Gateway Airport a 30-day review and comment period. That period concluded on October 28, 2021.

Attachment(s)
Revised "Airport Rules and Regulations"

RESOLUTION NO. 21-49

WHEREAS, the Phoenix-Mesa Gateway Airport Authority ("Authority"), a joint powers airport authority formed pursuant to Arizona Revised Statute §28-8521 *et seq.* owns and operates the Phoenix-Mesa Gateway Airport ("Airport"); and

WHEREAS the Authority desires to amend the Airport Rates and Regulations;

NOW, THEREFORE, BE IT RESOLVED by the Board of Directors of the Authority as follows:

> **The Board of Directors of the Authority hereby adopts the Airport Rules and Regulations 2021.**

Passed and adopted by the Authority this 16th day of November, 2021.

John Giles, Chair

ATTEST:

Misty Johnson, Clerk of the Board

APPROVED AS TO FORM:

Jill Casson Owen, Attorney

Phoenix-Mesa Gateway Airport

Phoenix-Mesa Gateway Airport

Airport Rules and Regulations

~~2020~~

2021

Table of Contents

Chapter 1: Purpose, Scope & Authority 1

1.1 Purpose and Scope 1

1.2 Authority 1

1.3 Compliance 1

1.4 Enforcement 2

1.5 Variance 2

1.6 Adoption of Federal and Local Regulations 3

1.7 Waiver of Liability 3

Chapter 2: General Rules and Regulations 6

2.1 Abandonment of Property 6

2.2 Accident Reporting 6

2.3 Advertisements & Printed Materials 6

2.4 Alcohol 6

2.5 Animals 6

2.6 Bicycles, Rollerblading and Skateboarding 7

2.7 Commercial Activity 7

2.8 Commercial Photography 7

2.9 Fees 8

2.10 Hunting 8

2.11 Loitering 8

~~2.11~~2.12 ..... Lost and Found Articles 8

~~2.12~~2.13 ..... Obstruction 8

2.14 Overnight Camping 8

2.13 .....

2.142.15 ..... Permits 8

2.152.16 ..... Preservation of Property 8

2.162.17 ..... Public Demonstrations 9

2.172.18 ..... Signage 9

2.182.19 ..... Solicitation 9

2.192.20 ..... Smoking 9

2.202.21 ..... Storage of Equipment or Property 9

2.212.22 ..... Tampering with Aircraft 10

2.222.23 ..... Use of Public Airport Facilities 10

Chapter 3: Aircraft Operations 12

3.1 Accidents & Disabled Aircraft 12

3.2 Aircraft/Airport Operations during Hours of Tower Closure 12

3.3 Airport Closures and Restrictions 12

3.4 Based Aircraft Registration 12

3.5 Engine Run-ups 13

3.6 Flight Demonstrations 13

3.7 Fly Friendly Procedures 13

3.8 General Operating Rules 13

3.9 Helicopters 14

3.10 Instructor and Student Responsibilities 14

3.11 Parking of Aircraft 14

3.12 Refusal of Clearance 15

3.13 Specialized Aeronautical Activities 15

3.14 Taxiing or Towing of Aircraft 15

3.15 Washing and Maintenance 156

3.16 Weight Bearing Capacities 16

3.17 Deicing 16

3.18 Terminal Common Use Facility 16

Chapter 4: Vehicle Operations 18

4.1 City of Mesa Traffic Ordinances 18

4.2 Emergency Right-of-Way 18

4.3 Endangerment 18

4.4 Equipment 18

4.5 Insurance 18

4.6 Motor Vehicle Accident Reporting 18

4.7 Movement Area Operations 18

4.8 Moving of Motor Vehicles 19

4.9 Parking 19

4.10 Repair of Motor Vehicles 21

4.11 Restricted Area Operations 21

4.12 Signs and Markings 22

Chapter 5: Fueling, Fire and Environmental Safety 24

5.1 Aircraft Fueling Operations 24

5.2 Aircraft Fuel Storage Facility Requirements 25

5.3 Inspection of Fuel Facilities, Records, Meter Readings, and Reporting 25

5.4 Self-Fueling Operations- Aircraft 26

5.5 Self-Fueling Operations- Automotive Vehicles and Equipment 27

5.6 Parking of Aircraft Fuel Service Vehicles 27

5.7 Explosives & Other Hazardous Materials 28

5.8 Fire Equipment 28

5.9 Hazardous Material Spills 28

5.10 Open Flames 28

5.11 Storm Water Discharge 29

5.12 Volatile Compounds 29

5.13 Dust Control 29

Chapter 6: Leases & Tenant Operations 31

6.1 Condition of Tenancy 31

6.2 Damage 31

6.3 Design Guidelines 31

6.4 Employees 31

6.5 Fire Equipment 31

6.6 Floor Care 31

6.7 Free of Debris 31

6.8 Hangar Storage 32

6.9 Insurance 33

6.10 Marking of Paved Areas 33

6.11 Preservation of Property 33

6.12 Regulation of Commercial Activities 33

6.13 Storage and Equipment 33

6.14 Structural and Decorative Changes 34

6.15 Trash Containers 34

Chapter 7: Security Requirements 36

7.1 Aircraft Security 36

7.2 Airport Security Program 36

7.3 Air Carrier 36

7.4 Aviation Repair Station 36

7.47.5 Challenge 36

7.57.6 Doors and Gates 36

7.67.7 Employee Access Investigations 37

7.77.8 Escorting 37

7.87.9 General Aviation Aircraft 37

7.97.10 Identification Media and Access Cards 37

7.107.11 Restricted Areas 37 78

7.117.12 Security Fence Line 38

7.127.13 Security Screening 38

7.137.14 Tailgating 38

7.147.15 ..... Tenant Security 38

7.157.16 ..... Violation of Security Regulations 38

7.167.17 ..... Weapons 389

Chapter 8: Special Events 4041

8.1 Authorization 4041

8.2 Aviation Activities 4041

8.3 Closures or Restrictions 4041

8.4 Coordination 4041

8.5 Damages 4041

8.6 Fees 412

8.7 Insurance 412

8.8 Normal Ingress/Egress 412

8.9 Plans 412

8.10 Special events 412

Chapter 9: Ground Transportation 434

9.1 Ground Transportation General Authority 434

9.2 Ground Transportation Provider Insurance Requirements 434

9.3 Conditions of Ground Transportation Provider 445

9.4 Ground Transportation Provider Vehicle Driver Requirements 456

9.5 Regulations and Licenses 456

9.6 Access and Parking 467

9.7 Soliciting 489

9.8 Miscellaneous Provisions 489

Appendix A: Definitions 5152

Appendix B: Fly Friendly Noise Abatement Procedures 578

This page intentionally left blank.

CHAPTER 1: PURPOSE, SCOPE & AUTHORITY

1.1 Purpose and Scope

These Rules and Regulations have been adopted and approved by resolution of the Phoenix-Mesa Gateway Airport Authority (PMGAA) and apply to the geographical property known as Phoenix-Mesa Gateway Airport. The provisions of this document are intended for the safe, orderly and efficient operation of Phoenix-Mesa Gateway Airport, hereafter referred to as "Airport".

1.2 Authority

On May 19, 1994, the City of Mesa, Towns of Queen Creek and Gilbert created the Williams Gateway Airport Authority, later renamed the Phoenix-Mesa Gateway Airport Authority ("PMGAA"), a Joint Powers Airport Authority, pursuant to Arizona Revised Statutes (A.R.S) Title 11, Chapter 7, Article 3 and Title 28, Chapter 25, Article 8. The Gila River Indian Community, City of Phoenix, and City of Apache Junction joined the Airport Authority in 1995, 2006 and 2013 respectively. PMGAA was formed to develop, reuse, operate, and maintain the Airport property and facilities at the former Williams Air Force Base.

With the August 1995 Record of Decision, the U.S. Air Force confirmed that PMGAA would receive, at no cost, nearly 3,000 acres of land, with three runways (10,400-foot, 10,200-foot, and 9,300-foot), 120 buildings or facilities (such as navigation aids), and the improvements thereon. A long-term lease with the U.S. Air Force was executed on January 16, 1996. Fee conveyance for the majority of the property occurred on April 29, 1998. Through the Joint Powers Airport Authority legislation and subsequent property conveyance, PMGAA is entitled to adopt and enforce these Rules and Regulations governing the safe operation of activities on the Airport.

The Rules and Regulations, Airport Minimum Standards and Airport Rates and Charges are all part of the Airport's governing documents. The administration of the terms of each of the documents independently and as a whole, shall be under the authority, responsibility, administration and control of the Executive Director/CEO or designee.

1.3 Compliance

All persons on any part of the property comprising the Airport shall be governed by these Rules and Regulations and by other directives of the Executive Director/CEO or designee relative to the use or occupation of any part of the property comprising the Airport. Permission granted to any person by the Executive Director/CEO directly or indirectly,

expressed or implied, to enter upon or use the Airport or any part thereof is conditioned upon compliance with these Rules and Regulations. Entry upon or onto the Airport by any person shall be deemed to constitute an agreement by such person to comply with such Rules and Regulations.

1.4 Enforcement

a. The Executive Director/CEO is empowered to enforce these Rules and Regulations through Airport staff and the City of Mesa Police Department. All persons in the Airport shall respond to directives issued by Airport Operations personnel, under the direction of the Executive Director/CEO, relative to the enforcement of these Rules and Regulations. Violations of Rules and Regulations may result in different forms of action including but not limited to verbal or in writing such as a Notice of Violation (NOV) issued by Airport Operations personnel.

b. The Executive Director/CEO or designee may remove or evict from the Airport premises any person who knowingly, willfully or recklessly violates any rule or regulation prescribed herein, or any rule or regulation in effect by the federal government or the State of Arizona, and may deny use of the Airport and its facilities to any such person if it is determined that such denial is in the public interest, notwithstanding any contractual arrangements.

c. If any provision of these Rules and Regulations is held to be invalid, the remainder of these Rules and Regulations shall remain in full force and effect. Future amendments, additions, deletions or corrections to these Rules and Regulations will be incorporated into the document as required and as directed by PMGAA.

d. Any person who feels these Rules and Regulations have been unjustly applied or enforced shall comply with the directives of PMGAA until such matter is resolved. Concerns regarding any enforcement practice shall be submitted in writing to the Executive Director/CEO within seven (7) days of the date of occurrence along with a description of the situation, the actions taken by Airport staff, and the desired resolution.

1.5 Variance

a. Any variance of the literal requirements of these Rules and Regulations may be granted by the Executive Director/CEO when strict enforcement is impractical, results in unnecessary hardship, or is contrary to the safety of flight operations. The granted variance shall result in substantial justice and is in accordance with the spirit of the

Rules and Regulations.

b. When an emergency exists at the Airport, the Executive Director/CEO or designee is empowered to issue directives and take such action as necessary to protect people, property and assets and promote the safe operation of the Airport. Such directives and actions of the Executive Director/CEO or designee have the power of regulation as long as the emergency exists.

c. PMGAA reserves the right to revoke, cancel or change any and all of these Rules and Regulations at any regular or special Board of Directors (Board) meeting with notification as required under A.R.S. All changes issued from time to time shall be considered as addenda to these Rules and Regulations. Future amendments, additions, deletions or corrections to these Rules and Regulations will be incorporated into the document as required and as directed by PMGAA.

1.6 Adoption of Federal and Local Regulations

a. Title 14, Code of Federal Regulations (CFR) Federal Aviation Regulations(FAA), Title 49, CFR (Transportation Security Administration Regulations), Title 40, CFR (Federal Environmental Regulations), Title 21, CFR (Food and Drug Administration), A.R.S Title 28 (Transportation), A.R.S Title 49 (Environment), Maricopa County Air Pollution Control Regulations, City of Mesa Fire Code, and other compliance documents required by Federal, State, or local government, whether presently or hereafter effective, are hereby referred to, adopted, and made part of these Rules and Regulations as though fully set forth and incorporated herein, as each may be amended from time to time.

b. Federal, State, or local laws or ordinances, in the event of any conflict, supersede PMGAA Rules and Regulations.

c. The Rules and Regulations shall in no way supersede or abrogate regulations set forth in FAA Federal Aviation Regulation (FAR) Part 139, Certification and Operation of Airports, nor Transportation Security Administration (TSA) Part 1542, Airport Security, as established and approved for PMGAA.

1.7 Waiver of Liability

Any permission granted by the Executive Director/CEO to use the Airport and its facilities, or to fly to, from, or over the same shall be at alltimes conditioned upon the assumption of full responsibility and risk associated therewith. It shall be a further condition thereof that each person, as consideration of the use of the Airport and its facilities, shall at all times indemnify PMGAA, the Board, the Executive Director/CEO, and employees from and

against any and all liability, responsibility, loss or damage, resulting to any such person or

caused by or on his behalf, and incident to the manner in which the Airport is operated, constructed or maintained, or served from within or without, or used from without. The use of the Airport by any person for any purpose, or the paying of fees thereof for the taking off or landing aircraft therein shall be itself an acknowledgment that such person accepts such privileges on the conditions herein set forth.

This page intentionally left blank.

CHAPTER 2: GENERAL RULES AND REGULATIONS

2.1 Abandonment of Property

No person shall abandon any personal property at the Airport. If not claimed by the owner within seven (7) days, such articles will be handled in accordance with A.R.S. ~~§44-301 et seq., as applicable.~~Title 44, Chapter 3, Section 1.[ME1]

2.2 Accident Reporting

Accidents resulting in damage to property, injury requiring professional medical treatment, or interference with normal operations must be reported to Airport Operations as soon as possible after the occurrence.

2.3 Advertisements & Printed Materials

Advertisements and other printed materials shall not be posted, distributed, displayed, or circulated at the Airport without the express written consent of the Executive Director/CEO, unless posted in areas specifically authorized for advertisements. The authorization may include time constraints as well as limiting the number of persons distributing the printed materials.

2.4 Alcohol

No person shall drink any intoxicating liquor upon any portion of the Airport open to the public, except in such restaurant or other place as shall be properly designated and licensed for on-sale liquor dispensing.

2.5 Animals

a. Animals other than those required for American with Disabilities Act (ADA) assistance or law enforcement dogs, are not allowed within the Airport Restricted Area unless being transferred or shipped, and/or under the control of their owner or handler by leash, harness, restraining strap, or cage. Leashes, harnesses, and straps shall not exceed six (6) feet.

b. No person shall enter any public building with any animal, except animals required for assistance or when such animals are leashed or containerized for airshipment.

c. Owners or handlers are responsible for the immediate removal and disposal of animal waste.

d. No person shall feed or engage in any other act to encourage the congregation of any animals on the Airport.

2.6 Bicycles, Rollerblading and Skateboarding

a. Bicycles within the Airport Restricted Area shall only be operated by Airport or tenant employees in the performance of their duties and shall not be operated within 50 feet of an aircraft under power.

b. Bicycle operators within the Airport Restricted Area must conform to all posted and non-posted rules and regulations regarding the use of vehicles.

c. Skateboarding and rollerblading are not permitted within the Airport Restricted Area.

2.7 Commercial Activity

Commercial activity of any kind requires the express written permission of the Executive Director/CEO through a specifically authorized lease, sublease, operating agreement, license, permit or written temporary permission and the payment of fees, as required.

2.8 Commercial Photography

a. No person shall take a still, motion, or sound picture on the Airport for commercial purposes without the permission of the Executive Director/CEO ~~or designee~~ and the payment of fees, as required. The Executive Director/CEO may allow any of the following to take pictures on the Airport for commercial purposes:

   1. Professional photographers and motion picture cameramen photographing events on the Airport as representatives of bona fide news organizations.

   2. Professional photographers and motion picture cameramen photographing events at the Airport for non-profit exhibition, to stimulate interest in air commerce or travel, or for non-profit educational purposes.

   3. Professional photographers photographing scenes on the Airport for general artistic purposes.

   4. Aviation photographers photographing aircraft in public or designated areas.

b. No person shall take a still, motion, or sound picture in any area exclusively leased to an Airport tenant without the permission of the tenant and coordination with the Executive Director/CEO's Office.

c. Any approved activity within the Airport Restricted Area shall have proper escort.

2.9 Fees

Fees, rates and charges shall be established, scheduled and published from time to time, by PMGAA and where applicable, paid to PMGAA by users of the Airport.

2.10 Hunting

Hunting on the Airport is prohibited, with the exception of wildlife control measures undertaken to further aviation safety in accordance with the Airport's approved wildlife management plan.

2.11 Loitering

No person shall loiter in Airport buildings or on Airport property. This includes occupying passenger terminal buildings or property in excess of 24 hours prior to a ticketed flight unless authorized by the Executive Director/ CEO.

~~2.11~~2.12 Lost and Found Articles

Lost and found articles shall be deposited with Airport Operations. Such articles will be handled in accordance with A.R.S. Title 44, Chapter 3, Section 1.

~~2.12~~2.13 Obstruction

No person, except law enforcement officers, firefighting personnel, TSA, FAA and PMGAA personnel may intentionally obstruct, delay, physically disturb or interfere with the free movement of any other person on the public areas of the Airport, unless doing so in accordance with the Airport's security challenge procedures.

~~2.13~~2.14 Overnight Camping

Overnight camping on the Airport is prohibited unless authorized by the Executive Director/CEO~~ or designee.~~.

~~2.14~~2.15 Permits

Permits and licenses authorizing certain activities on the Airport shall be issued and revoked at the discretion of the Executive Director/CEO.

~~2.15~~2.16 Preservation of Property

a. No person shall destroy or cause to be destroyed, injure, damage, deface, or disturb in any way, property of any nature located on the Airport. Any person causing or responsible for such injury, destruction, damage, or disturbance shall report such damage to Airport Operations and shall reimburse PMGAA the full amount of repair

~~a.~~ or replacement of the property.

b. No person shall take or use any aircraft, aircraft parts, instruments, or tools owned, controlled, or operated by any person while on the Airport or within its hangars, except with the written consent of the owner or operator thereof.

2.162.17 Public Demonstrations

Public demonstration, such as picketing and other peaceful action, is permitted on Airport property provided the sponsor obtains written permission from the Executive Director/CEO or authorized designee and complies with all PMGAA Rules and Regulations, with emphasis to Sections 2.12 Obstruction s 2.12 Obstruction and 2.22 Use of Public Airport Facilities.

2.172.18 Signage

Signage standards are established by PMGAA in compliance with the City of Mesa Sign Code.

a. No sign, advertisement or notice shall be displayed on the outside of any structure on the Airport or on Airport property unless authorized under the Airport Design Guidelines.

b. Roadway and directional signage shall be in compliance with City of Mesa traffic control, and no roadway signage shall be displayed unless authorized by the Executive Director/CEO.

c. No person shall display solicitations, advertising, or other signs[ME2] on the Airport property, including the property within the roadway easements, without the authorization of the Executive Director/CEO.

2.182.19 Solicitation

No person shall solicit funds or other items to the public on the Airport without the express written approval of the Executive Director/CEO.

2.192.20 Smoking

In accordance with the Smoke-Free Arizona Act and Mesa City Code, Title 6, Chapter 11, smoking is not permitted: 1) in any public place, including any workplace; 2) at or within 20 feet from building entrances; 3) in designated 'no smoking' areas posted as such by PMGAA; or 4) at other locations through which public movement can be anticipated. In addition, PMGAA has designated aircraft parking ramps as smoke-free.

2.202.21 Storage of Equipment or Property

Storage of equipment or property not used for aviation or other approved operations or activity on the Airport is prohibited unless specifically provided for by lease or other contractual agreement. This includes recreational vehicles (boats, motor homes, personal

watercraft, etc.) and other motor vehicles not specifically used for the authorized operation.

2.212.22 Tampering with Aircraft

No person shall interfere or tamper with any aircraft or put in motion the engine of such aircraft, or use any aircraft, aircraft parts, instruments or tools, without permission of the owner or specific direction of the Executive Director/CEO or designee.

2.222.23 Use of Public Airport Facilities

No person(s), firm(s), association(s), or corporation(s) shall sponsor, hold, permit or otherwise carry on any activity that would impact the operation of the Airport without first obtaining written permission from the Executive Director/CEO and complying with all the terms and conditions of such authorization. In the event approval is given, written evidence of insurance covering all injury, damages, or claims that might result from such activities shall be submitted to the Airport.

This page intentionally left blank.

CHAPTER 3: AIRCRAFT OPERATIONS

3.1 Accidents & Disabled Aircraft

a. Persons involved in aircraft accidents or incidents on the Airport shall make a full report thereof to the Air Traffic Control staff or Airport Operations as soon as practical. The pilot or operator involved in an accident causing personal injury or property damage may be requested to make a written report concerning said accident.

b. Access to aircraft accident and incident scenes shall be controlled by a designated Incident Commander. Persons are not authorized to enter an accident or incident scene without the permission of the Incident Commander.

c. The pilot, aircraft owner, lessee, or operator is responsible for the prompt removal of the disabled aircraft or parts thereof as directed by the Executive Director/CEO, subject to accident investigation requirements. The Executive Director/CEO or designee is authorized to remove or relocate a disabled aircraft from any location on the Airport at the expense of the owner/operator.

3.2 Aircraft/Airport Operations during Hours of Tower Closure

After the published hours of the Air Traffic Control Tower, all aircraft/vehicles operating within the ~~Air Operations Area (AOA)~~movement area must broadcast their intentions on the Common Traffic Advisory Frequency (CTAF) in accordance with suggested procedures published in the Airman's Information Manual, FAR's, and FAA Advisory Circulars.

3.3 Airport Closures and Restrictions

In the event that the Executive Director/CEO believes that the conditions of the Airport or any part thereof are unsafe for landings and take-offs, it shall be within their authority to close or restrict all or part of the Airport and issue a Notice to Airmen (NOTAM) indicating so.

3.4 Based Aircraft Registration

The owner and/or operator of aircraft based on the Airport's ramp area shall execute a written agreement with PMGAA stating, among other things, the based aircraft status, aircraft identification, and compliance with aircraft parking fees. Aircraft based at the Airport but within a tenant's leasehold shall be reported by the tenant quarterly or upon request by the Executive Director/CEO. Reports shall be detailed (including: Registration/N Number, Names, address and phone number of owner) of all based aircraft

on the Airport in a form approved by the Airport Authority.

3.5 Engine Run-ups[SB3][ME4]

a. Aircraft engine run-ups above ground idle shall only be conducted at the engine run-up areas adjacent to each runway end or within those areas designated by the Executive Director/CEO ~~or designee~~.

b. No aircraft engine shall be started or run unless a qualified, certificated pilot or mechanic is attending the aircraft controls.

c. Aircraft engine run-ups shall not be conducted in such positions that the path of the propeller wash or jet blast may endanger persons, structures, or property. In the event that the path of the propeller wash or jet blast may cross a marked service road, a safety flagger is required.

d. Aircraft engine maintenance run-ups are not authorized between the hours of 2000 (8:00 pm) and 0800 (8:00 am) unless: 1) they are conducted with Airport approved sound suppression devices; or 2) are performed in conjunction with an air ambulance flight; or 3) are coordinated with Airport Operations prior to commencement 4) coordinated with ATC when conducted in the movement area.

3.6 Flight Demonstrations

a. Demonstrations, including test flights or ground demonstrations other than standard maintenance test flights shall not be conducted on the Airport without the express written consent of the Executive Director/CEO.

b. PMGAA specifically reserves the right to temporarily restrict or control activities within aircraft operating areas and public areas of the Airport for purposes of aerial and ground demonstrations or for any other public purpose.

3.7 Fly Friendly Procedures

Aircraft operators shall, whenever possible, use procedures and flight patterns that help mitigate aircraft noise. PMGAA supports the use of the National Business Aviation Association (NBAA) and Aircraft Owners and Pilots Association (AOPA) noise abatement procedures. The Airport's published Fly Friendly procedures are described in Appendix B.

3.8 General Operating Rules

a. No aircraft shall be operated on the Airport if such aircraft is constructed, equipped or loaded as to endanger persons or property.

b. No aircraft shall be operated on the Airport in a careless or negligent manner, in disregard of the rights and safety of others, without due caution, or at a speed or manner that is likely to endanger persons or property.

c. No aircraft shall be operated on the Airport while the pilot, or other persons aboard controlling any part of the operation, is under the influence of intoxicating liquor or any narcotic drugalcohol or drugs.

d. Taxiways, apron, or ramp areas shall not be used for take-offs and landings of any type aircraft without the appropriate clearance from the Air Traffic Control Tower, whenever the Tower is in operation. Aircraft operating during the hours the Tower is not operating shall comply with appropriate FAA regulations and Advisory Circulars.

e. No aircraft engine shall be operated inside any aircraft hangar or within 25 feet of any opening to a hangar or a building.

f. Unmanned Aerial Vehicle (UAV) operations shall comply with all FAA Part 107 regulations.

3.9 Helicopters

Helicopters shall not be operated with rotors turning unless there is a clear area of at least 25 feet in all directions from the outer tips of the rotor, unless being fueled under established procedures.

3.10 Instructor and Student Responsibilities

Flight instructors shall fully acquaint their students with these Rules and Regulations and shall be responsible for the conduct of the students under their direction during dual instruction. When a student is solo, it shall be the sole responsibility of the student to observe and abide by these rules.

3.11 Parking of Aircraft

a. Aircraft parking shall be restricted to approved parking areas designated by Airport Operations and Maintenance and/or Gateway Aviation Services Director or completely within an exclusive leasehold area with the permission of the leasehold tenant.

b. No aircraft shall be parked or staged within marked service roads, or fire lanes, or in a manner as to interfere with taxiing aircraft, or in a manner that blocks free movement

b.of aircraft or emergency vehicles or hinders access to any building or structure.

c. Aircraft parked or stored in unauthorized areas or which present an operational problem or safety ~~problem~~hazard to any area of the Airport may be towed orrelocated to other Airport areas at the discretion of the Executive Director/CEO ~~or designee~~ and at the operator's expense.

d. Derelict or non-flyable aircraft shall not be stored on the Airport's parking ramp or on property that has not been specifically leased or designated by the Executive Director/CEO for such purpose.

3.12 Refusal of Clearance

The Executive Director/CEO or designee may delay or restrict any flights or the conduct of other aviation-related operations at the Airport and may notify Air Traffic Control to refuse take-off clearance to any aircraft for any reason the Executive Director/CEO or designee reasonably believes is in the best interest of the public or essential to the safe operation of the Airport.

3.13 Specialized Aeronautical Activities

Hot air balloon operations, ultra-light aircraft operations, banner-tow operations, and parachute drops mixing with commercial, military, and other jet activities can create a hazardous environment. Such specialized activities require prior written approval from the Executive Director/CEO.

3.14 Taxiing or Towing of Aircraft

a. No person shall taxi an aircraft into or out of an enclosed hangar under its own power.

b. All aircraft taxiing or under tow on any part of the ramp, apron, or taxiways shall proceed with aircraft position lights on at night and during periods of low visibility.

c. When the Air Traffic Control Tower is in operation, aircraft shall not be taxied, towed, or otherwise ~~moved~~move on any part of the movement area until specifically cleared to do so.

d. No aircraft shall be taxied, or engines operated at the Airport where the exhaust or propeller blast may cause injury to persons or damage to property. If it is impossible to taxi such aircraft in compliance with the ~~above~~about, then the engine(s) must be shut off and the aircraft towed to the desired destination.

e. No person shall tow an aircraft on airport movement area unless such person has

f. passed an approved Airport training program, receives recurrent training, has been issued and is in possession of an Airport security badge with the applicable

endorsement.

3.15 Washing and Maintenance

a. Washing and maintenance of aircraft or other Airport related equipment shall only be conducted in accordance with environmental regulations and at approved wash racks or other areas designated by the Executive Director/CEO, or within specific tenant areas where such activity is permitted under lease or agreement.

b. Aircraft maintenance other than minor maintenance as defined by FAA is prohibited on the ramp areas unless specifically authorized by Airport Operations or the Airport Duty Manager.

3.16 Weight Bearing Capacities

Aircraft exceeding the published weight bearing capacity of any runway, taxiway, or apron area are prohibited from operating on those areas without the express written approval of the Executive Director/CEO.

3.17 Deicing

a. Air Carriers must submit a Deice Plan by November 1st of each year.

b. Air Carriers using deicing and anti-icing chemicals must be in accordance with the Storm Water Pollution Prevention Plan and their Deice plan.

3.18 Terminal Common Use Facility

Designated Common Use Gates, hardstand positions, and RON facilities for scheduled and non-scheduled flight operations by all carriers shall be managed and approved by Airport Operations in the best interests of facility efficiency. Aircraft Operators using the Common Use Facility shall comply with the Common Use Facility Operating Procedures.

This page intentionally left blank.

CHAPTER 4: VEHICLE OPERATIONS

4.1 City of Mesa Traffic Ordinances

City of Mesa traffic ordinances shall apply to all public roadways on the Airport and are enforced through the City of Mesa.

4.2 Emergency Right-of-Way

Upon the approach of a police, ambulance, fire department, Airport or other emergency vehicle giving an audible or visual signal that it is on an emergency call, each person operating another vehicle on any road ~~on~~inside the Airport Restricted Area shall immediately ~~drive his~~move out of the path of the approaching emergency vehicle ~~parallel with, and as near as possible to, the right hand edge of the road,~~without crossing into the controlled movement area. Stay clear of all intersections~~,~~ and stay there until the emergency vehicle has stopped or passes, unless otherwise directed by an emergency service worker.

4.3 Endangerment

No person shall operate a vehicle on the Airport that is constructed, equipped, or loaded in such a physical or mechanical condition as to endanger persons or property.

4.4 Equipment

No person shall operate a vehicle on the Airport unless the vehicle is in sound mechanical condition with adequate safety equipment.

4.5 Insurance

All motor vehicles operated on the Airport must have liability insurance consistent with the State of Arizona motor vehicle insurance laws.

4.6 Motor Vehicle Accident Reporting

Each operator of a motor vehicle involved in an accident on the Airport that results in damage to property or personal injury shall report it to Airport Operations as soon as possible after the accident. The report must include the name and address of the person reporting. Copies of reports taken by City of Mesa Police are acceptable for incidents that occur in the public areas of the Airport.

4.7 Movement Area Operations

a. Prior to entering the aircraft movement area all vehicles shall yield right-of-way to

~~all taxiing aircraft and aircraft under tow.~~

all taxiing aircraft and aircraft under tow.

b. No person shall operate a vehicle in the movement area unless prior permission has been obtained from Airport Operations and the vehicle is equipped with a two-way radio in communication with and clearance has been received from the Air Traffic Control Tower, unless under the control of an authorizedescort.

c. No vehicle shall enter the movement area unless equipped with an appropriately sized flashing or steady-burning yellow beacon, mounted on the uppermost part of the vehicle such that it is conspicuous from any direction including from the air. An orange and white- checkered flag may be used in lieu of the flashing beacon for daytime activities. The flag shall be mounted so that it is conspicuous from any direction.

4.8 Moving of Motor Vehicles

The Executive Director/CEO or designee has the authority to tow or otherwise move any motor vehicle on the Airport property for reasons of operational necessity, safety, security, abandonment, illegal or unauthorized or improper parking or police investigation. PMGAA may charge a reasonable amount for the moving service and for the storage of the vehicle, if any. The vehicle may be subject to a lien for that charge.

4.9 Parking

a. The Executive Director/CEO or designee are authorized to reserve all or any part of vehicle parking lots and other areas not under lease or permit for use as they may designate, and to indicate any restrictions by appropriate markings and/or signs.

b. No person shall park a vehicle in any parking area without the express or implied consent of PMGAA. All areas designated for vehicle parking are subject to City of Mesa Code, Title 10 requirements.

c. Vehicle parking areas are intended for use by a full-size passenger automobile (19 feet in length maximum). Vehicles exceeding 19 feet shall park in designated areas.

d. Where appropriate signs and/or markings have been installed, no person shall park or stand a motor vehicle on the Airport except in an area specifically designated for parking or standing. No vehicles shall be loaded or unloaded in parking areas other than those designated by PMGAA for such activities (i.e. designated loading zones, loading areas, etc.). Unauthorized vehicles in designated loading areas or areas with signs/markings prohibiting parking/ standing a motor vehicle may be subject to tow at the owner's sole cost and expense.

e. Vehicles parked in any authorized parking area shall park in such a manner as to comply with all posted and/or painted lines, signs, and rules.

f. Tenant ramp vehicles and equipment shall be only parked within the tenant leasehold areas or in approved parking stalls. Outside storage of vehicles or equipment outside of the leasehold premises area is prohibited.

g. ~~No person shall park, stop, or leave standing any vehicle, whether occupied or not, on the Airport, except within designated parking spaces.~~ [ME5][ME6]Passenger vehicle parking areas shall only be used for parking vehicles no longer than a full-size passenger automobile, (which excludes commercial vehicles), only in the designated and entirely within the painted and striped parking stall lines~~, on an unreserved "first-come, first serve" basis.~~ [ME7] No double parking is permitted.

h. No person shall park or stand a motor vehicle on the Airport within 10 feet of a fire hydrant.

i. Privately owned vehicles are not authorized to park within the Airport Restricted Area unless prior approval has been obtained from Airport Operations, through the issuance of a PMGAA issued Vehicle Identification Permit. Such permit shall be displayed at all times, in a conspicuous location.

j. Vehicles parked in the Airport parking lots, which do not belong to passengers, Airport employees, Airport tenants, or Airport/Tenant customers are subject to tow and storage at the owner's expense (Mesa City Code, Title 10, Chapter 9). Illegally parked vehicles are subject to parking charges as published in the current Rates & Charges.

k. Tenant employees shall utilize designated parking locations identified in lease or other agreement.

l. Lessee and its invitees shall obey all signs and motor vehicle codes.

m. Every person using the parking areas shall park and then lock his/her own vehicle. PMGAA will not be responsible for any damage to vehicles, injury to persons or loss of property, all of which risks are assumed by the party using the parking areas.

n. PMGAA reserves the right to refuse the use of any parking area to any person or entity that willfully refuses to comply with these applicable parking rules, Airport regulations, laws, and or agreements.

o. Such parking use as is herein provided is intended merely as a license only, and no bailment is intended or shall be created hereby.

p. The speed limit in parking areas is five (5) miles per hour.

q. The maintenance or washing of vehicles parked on the Airport is prohibited, except in designated wash areas.

r. Parking is prohibited in common areas not designated for parking, areas not striped for parking, drive aisles, loading zones, cross hatched areas, illegal parking areas, in front of loading doors or ramps, and or any entrance or exit to or from the Airport unless authorized by the Executive Director/CEO or designee.

s. In the event that any party fails to comply with the Parking Regulations hereinabove, PMGAA shall cause the vehicle in violation to be towed off the premises at the owner's sole cost and expense, without any liability or cost to PMGAA whatsoever.

4.10 Repair of Motor Vehicles

Except for persons authorized by the Executive Director/CEO or Airport Duty Manager and for minor repairs necessary to move the vehicle from the Airport, no person shall repair a motor vehicle on a road or in a parking area of the Airport.

4.11 Restricted Area Operations

a. No person shall operate a motor vehicle within the Airport Restricted Area without a valid driver's license, and if applicable, proper Airport Driver Endorsement on their security badge unless under the control of an authorized escort. The Airport Driver Endorsement must be presented upon the request of any Airport Operations Staff.

b. No person shall operate a vehicle within the Airport Restricted Area unless their presence is specifically required for Airport business or services.

c. The Executive Director/CEO or designee has the authority to deny, restrict, or cancel the privilege of any motor vehicle operator from operating within the Airport Restricted Area.

d. No person shall operate a motor vehicle at a speed:

1. Of more than 25 mph on any marked service road;
~~1.~~2. Of more than 15 miles per hour on any aircraft apron or ramp;

~~2. Of more than 25 mph on any marked service road;~~

3. Of more than five (5) miles per hour around aircraft;

4. That could endanger any aircraft, vehicle, or person.

e. Airport and aircraft support vehicles and construction vehicles driving or operating within the Airport Restricted Area shall display the company name or logo; a minimum of four (4) inches high on each side of the vehicle.

f. All vehicles operating on service roads and non-movement areas ~~excluding construction areas~~ shall be equipped with an amber rotating beacon, or yellow flashing or steady burning beacon while operating in the Airport Restricted Area[ME8][ME9][ME10]. Vehicles without such equipment shall be under continuous escort. Construction vehicles shall display an orange and white checkered flag or amber rotating beacon during the daytime operations, and an amber rotating beacon or yellow flashing or steady burning beacon during nighttime operations.

g. Except while in the process of servicing an aircraft or Airport facility, vehicle traffic on the ~~ramp~~apron shall use marked service roadways where designated.

h. Each person operating a motor vehicle on the Airport shall operate it so as to have it under proper control at all times, weather and traffic conditions considered.

i. Washing of vehicles at the Airport wash rack is limited to tenant company vehicles and equipment.

j. Each person operating a motor vehicle within the Airport Restricted Area shall yield the right of way to aircraft, aircraft under tow and pedestrians.

4.12 Signs and Markings

No person shall operate a vehicle on Airport roadways unless it is operated in strict compliance with all roadway signs, markings, and speed limits prescribed by the Executive Director/CEO.

This page intentionally left blank.

CHAPTER 5: FUELING, FIRE AND ENVIRONMENTAL SAFETY

5.1 Aircraft Fueling Operations

a. No person shall operate as an FBO (Fixed Base Operator) or SASO (Specialized Aviation Service Operator) for the purpose of selling fuel for commercial revenue.

b. No person shall operate a fuel truck or fuel transfer vehicle within the Air Operations Area unless such person has passed an approved Airport training program, receives recurrent training, is issued an Airport security badge with a driver and fueling or self-fueling endorsement, and complies with the provisions outlined in PMGAA Aviation Fuel Storage, Handling and Dispensing Guidelines.

c. No person shall fuel/defuel aircraft on PMGAA property unless they are an employee of; 1) an approved on-Airport Fixed Base Operator; or 2) an aircraft operator fueling its airport-based aircraft at its based location. Fueling/defueling of non-based aircraft or aircraft not located at its based location is prohibited, unless approved in writing by the Executive Director/CEO.

   During the fueling of an aircraft, the dispensing apparatus and the aircraft must be bonded in accordance with City of Mesa Code, Uniform Fire Code Standards Section 24-1, NFPA 407 Regulations and ATA 103 Standards.

d. Fuel service vehicles are prohibited from parking within 50 feet of, or within a building.

e. No person shall fuel or defuel an aircraft on the Airport while:

   1. The aircraft is in a hangar or an enclosed space;

   2. The aircraft fuel system vents or fuel tank openings are closer than 25 feet to any terminal building, hangar, service building or enclosed passenger concourse other than a loading walkway.

   3. The aircraft vent or tank openings are within 50 feet of any ventilation air- intake to any boiler, heater or incinerator room.

   4. Passengers are in the aircraft, unless a passenger loading ramp is in place at the cabin door, the door is open, and a cabin attendant is at or near the door.

f. No person shall start the engine of an aircraft on the Airport if there is any gasoline or other volatile flammable liquid on the ground underneath the aircraft.

g. Each person engaged in fueling or defueling on the Airport shall exercise care to prevent the overflow of fuel and must have readily accessible and adequate fire extinguishers.

h. No person shall smoke or use any material that is likely to cause a spark or be a source of ignition within 50 feet of an aircraft being fueled or defueled.

i. Each hose, funnel, or appurtenance used in fueling or defueling an aircraft on the Airport must be maintained in a safe, sound, and non-leaking condition and must be properly electrically bonded to prevent ignition of volatile liquids.

j. Fueling activities shall cease when lightning discharges occur within three (3five (5) miles of the Airport.

5.2 Aircraft Fuel Storage Facility Requirements

Aircraft fuel storage facilities shall be permitted only if the facility is constructed and maintained in accordance with these regulations and the following: The aircraft fuel storage area is for noncommercial, private use only by the owner or aircraft operator. Aircraft fuel storage facilities which refuel aircraft, in accordance with the provisions of PMGAA Rules & Regulations and PMGAA Minimum Standards, may selldispensing permitted fuels as approved in writing by the Executive Director/CEO. Aircraft fuel storage areas shall only be constructed after written approval of the Executive Director/CEO and after issuance of all applicable permits. The fuel storage area shall not be approved and operated except in conjunction with aircraft storage that meets the requirements of these regulations. In the event there is a requirement for separate aviation fuel types, there shall be a maximum of two (2) aircraft fuel storage areas on each building site. Total aircraft fuel storage of Jet A shall not exceed 25,000 gallons. Total aircraft fuel storage of 100LL Avgas shall not exceed 12,000 gallons. Fuel storage areas will be fenced, with gates and warning placards, prohibiting unauthorized access.

5.3 Inspection of Fuel Facilities, Records, Meter Readings, and Reporting

a. PMGAA shall have a right of access onto private property at the airport for the purpose of inspecting fuel facilities and equipment. Fuel storage and dispensing records shall be subject to inspection by PMGAA upon reasonable notice. Such inspection may include, but not be limited to, taking meter readings, reviewing and inspecting fuel storage records, fueling apparatus, training records, emergency equipment, and any and all material for safe fuel handling.

b. Not later than the last day of each month, the operator of the fuel storage area shall submit to PMGAA, in a form acceptable to the Executive Director/CEO, a monthly fuel inventory reconciliation report for the immediately preceding month. At a minimum, the report shall include:

~~1. The type and amount of fuel dispensed into all aircraft, fixed wing and helicopters from the fuel storage area.~~

~~2.~~1. The type and amount of fuel received, spilled, leaked, de-fueled from aircraft or otherwise accounted for from the fuel storage area.[MN11][ME12]

c. At the time of submission of the monthly fuel inventory reconciliation report, each operator of a fuel storage area shall remit to PMGAA, in a form acceptable to the ~~Board~~Executive Director/CEO, all applicable fees then due under the Airport Rates and Fees Schedule.

d. The operator of the fuel storage area shall comply with, at the operator's expense; all PMGAA, local, state, and federal regulations, including but not limited to observed testing and submission of annual reports to the appropriate authorities and PMGAA.

5.4 Self-Fueling Operations-Aircraft

a. Individuals desiring to self-fuel their own aircraft shall receive instruction from PMGAA and obtain a permit authorizing such operations unless using an approved self-service fuel island.

~~b.~~ Gravity feed fueling ~~is prohibited.~~

~~c. Hand or power operated pumps shall be used when aircraft are fueled from drums or other metal containers or tanks.~~

~~d.~~b. ~~Pouring~~ shall not be permitted from a container with a capacity of more than five gallons. Plastic containers shall not be used for fuel dispensing due to static discharge potential.

~~e.~~c. Fueling hoses shall be approved for flammable liquids and shall be maintained in accordance with nationally recognized standards.

~~f.~~d. Fueling nozzles shall be equipped with a deadman flow control valve. Notches or latches in the nozzle handle that could allow the valve to be locked open are prohibited.

g.e. An approved portable fire extinguisher having a minimum classification of 40: B shall be provided and maintained within 50 feet of all self-fueling operations.

~~h.~~f. Aircraft shall not be occupied during self-fueling or defueling operations.

g. Aircraft being self-fueled or defueled shall have the battery and ignition switches in the "off" position.

~~i.~~

~~j.~~h. Battery chargers shall not be connected, disconnected, or operated during self-fueling or defueling operations.

~~k.~~i. The fueling nozzle shall be bonded with a nozzle bond cable having a clip or plug to a metallic component of the aircraft that is metallically connected to the tank filler port. The bond connection shall be made before the filler cap is removed. If there is no plug receptacle or means for attaching a clip, the operator shall touch the filler cap with the nozzle spout before removing the cap so as to equalize the potential between the nozzle and the filler port. The spout shall be kept in contact with the filler neck until the fueling is completed.

~~l.~~j. When a funnel is used in aircraft self-fueling, it shall be kept in contact with the filler neck as well as the fueling nozzle spout or the supply container to avoid the possibility of a spark at the fill opening. Only metal funnels shall be used.

~~m.~~k. Self-fueling operations shall comply with all other rules and regulations regarding aircraft fueling operations.

5.5 Self-Fueling Operations- Automotive Vehicles and Equipment

Automotive and equipment other than Refueling Service Vehicles and Tank Vehicles shall be refueled by authorized persons only at prescribed refueling stations and from dispensing systems that are approved by the Executive Director/CEO. "Motor gasoline (MOGAS)", as defined in ASTM Specification D 4814 or Federal Specification VV-G-1690C, is characterized as blended to form a fuel suitable for use in spark-ignition engines. Motor ~~gasoline~~fuel includes diesel and conventional gasoline; all types of oxygenated gasoline, including gasohol; and reformulated gasoline, but excludes aviation gasoline. Any person seeking to perform MOGAS self-fueling operations at the Airport shall comply with all applicable requirements concerning such activities as set forth in this policy and all Local, State, and Federal laws.

5.6 Parking of Aircraft Fuel Service Vehicles

Aircraft fuel service vehicles shall not be parked inside any buildings, except for approved

vehicle maintenance and repair facilities. Such vehicles may only be parked in areas authorized by the Executive Director/CEO~~ or designee~~.

5.7 Explosives & Other Hazardous Materials

Explosives and other hazardous materials not acceptable for transportation under applicable federal regulations are not permitted on the Airport. Hazardous materials that pose a present or potential hazard to human health and safety or to the environment if released are also prohibited. Class 1 explosives, Class A poisons and radioactive materials as defined in the latest edition of the Emergency Response Guidebook are not permitted anywhere on the Airport, except as approved in writing by the Executive Director/CEO.

5.8 Fire Equipment

~~Fire~~Airport fire extinguishers and Airport fire protection systems shall not be tampered with at any time, relocated nor used for any purpose other than firefighting or fire prevention. All tenants shall supply and maintain such adequate and readily accessible fire extinguishers within their leaseholds as may be required by the City of Mesa Fire Department~~.~~

5.9 Hazardous Material Spills

a. Whenever a hazardous material spill or leak occurs, the owner of the material or equipment involved in such spill or leak shall take immediate steps necessary to ensure discovery, containment, and clean-up of such release and notify the Mesa Fire Department and~~/or~~ Airport Operations of the occurrence. Charges may be assessed by the Executive Director/CEO for cleanup services including, but not limited to, reimbursement of labor, equipment, and materials.

b. Fuel spills greater than 10 feet in any dimension, covering an area of over 50 square feet, greater than five (5) gallons, or continuous in nature shall be immediately reported to City of Mesa Fire Department and Airport Operations.

5.10 Open Flames

a. No person shall start any open fire of any type on any part of the Airport without advance written permission from the Executive Director/CEO.

b. No person shall operate a flame or spark-producing device on any part of the Airport except in areas within leased premises specifically designated for such use ~~by the Executive Director/CEO~~ unless a permit from the City of Mesa Fire Marshall or other appropriate official has first been obtained. No permit shall be issued for operations within any aircraft hangar, any fuel storage area, or upon any components of the fuel distribution system unless the work is required for the repair of such areas or hangars. Where such repair is required, permission shall first be obtained from the City of Mesa Fire Marshall and shall be subject to conditions as he/she may impose.

c. Every person observing any unattended or uncontrolled fire on Airport premises shall immediately report it to 9-1-1. No person shall make any regulation or order, written or verbal, which would require any person to take unnecessary delaying action prior to reporting such a fire.

5.11 Storm Water Discharge

All storm water discharge requirements, including applying for, paying for, and obtaining the required Arizona Pollutant Discharge Elimination System (AZPDES) Storm Water Permit are the responsibility of each tenant or authorized contractor that will cause, create, or develop an industrial discharge at any location on the Phoenix-Mesa Gateway Airport property. All Tenants are responsible for determining their industrial status through the Arizona Department of Environmental Quality (ADEQ), filing the appropriate forms (i.e. Notice of Intent), and completing the applicable section of their Lease documentation pertaining to Environmental Compliance. All Tenants are responsible for compliance with the Storm Water Control Measures as outlined in PMGAA Storm Water Pollution Prevention Plan (SWPPP).

5.12 Volatile Compounds

a. No person shall use a flammable volatile liquid having a flash point of less than 100 degrees Fahrenheit for cleaning purposes in a hangar or other building on the Airport, unless it is approved by the City of Mesa Fire Department.

b. No fuel, oil, grease, flammable liquids, or contaminants of any kind including detergents used to wash aircraft or other surfaces, shall be allowed to flow into any sewer system, storm drain, or open water area without a separator.

c. No person, tenant, or company shall store any cylinders of compressed flammable gas inside any building except as may be permitted under applicable NFPA standards and the City of Mesa Fire Code.

d. No person shall store lubricating oils or other flammable materials except in appropriate storage cabinets suited for such use.

5.13 Dust Control

All tenants and personnel performing any type of ground disturbing activities(s) shall minimize the amount of dust generated from said activity by spraying clean water on the source or by using a dust palliative. Tenants creating any dust-generating activity may

need to apply for a Maricopa County Air Quality Dust Control Permit at their expense.

This page intentionally left blank.

CHAPTER 6: LEASES & TENANT OPERATIONS

6.1 Condition of Tenancy

All Airport tenants must acknowledge through their lease or operating agreement that they will comply with these Rules and Regulations and appropriate minimum standards as a condition of tenancy or operation on the Airport.

6.2 Damage

Tenants and lessees, in addition to any terms that may be contained in their lease agreement, shall be fully responsible for all damages to buildings, equipment, real property, appurtenances, or other improvements in the ownership or custody of PMGAA, caused in whole, or in part, by their employees, agents, customers, visitors, suppliers, or persons with whom they may do business.

6.3 Design Guidelines

All facilities developed on the Airport shall conform to PMGAA Design Guidelines, Landscape Master Plan, and other pertinent standards, guidelines or requirements.

6.4 Employees

Tenants are responsible for ensuring their employees are familiar with and comply with these Rules and Regulations, applicable minimum standards, and appropriate portions of their lease or other agreement with PMGAA. Tenants are also responsible for ensuring their employees and contractors meet physical and mental standards necessary for the safe conduct of the employee's job tasks.

6.5 Fire Equipment

Tenants are responsible for supplying and maintaining any required fire equipment on a tenant's premises unless specifically excluded in their lease agreement.

6.6 Floor Care

Each person to whom space on or at the Airport is leased, assigned, or made available for use shall keep the space free and clear of oil, grease, or other foreign materials that could cause a fire hazard or otherwise unsafe condition, or damage to the flooring material.

6.7 Free of Debris

Tenants shall keep hangars, shops, offices, other buildings, and areas adjacent thereto free of waste material, rubbish, junk, landscaping litter and flammable material. Tenants shall clear FOD in the AOA generated from their premises, vehicles, or equipment.

6.8 Hangar Storage

a. Aircraft hangars shall be used for aeronautical purposes or be available for use for an aeronautical purpose. Aircraft hangars shall remain in compliance with FAA policy, specifically 81 FR ~~and 38906~~38906 Policy on the Non-Aeronautical use of Airport Hangars, and all occupancy shall be subject to and in compliance with the City of Mesa Building Code, City of Mesa Fire Code, and Airport Rules and Regulations (collectively "Code") at all times.

b. The incidental storage of the aircraft owner's personal property related to the use, care, maintenance, and storage of an aircraft is permitted, provided that all non-aviation related items shall not obstruct any aircraft ingress and egress to the aircraft hangar or right of way thereto.

c. Preventative maintenance of an aircraft by the aircraft owner or properly licensed mechanic is permitted, provided that such activity creates no hazard or nuisance to the hangar facility or to Airport property.

d. Storage of aircraft parts, equipment, and supplies that relate to the aircraft owner's airworthy aircraft are permitted, provided that such storage of materials creates no hazard or nuisance to the hangar facility or to Airport property.

e. This section applies regardless of whether the hangar occupant leases the hangar from the airport sponsor or developer, or the hangar occupant constructed the hangar at the occupant's own expense while holding a ground lease. When land designated for aeronautical use is made available for construction of hangars, the hangars built on the land are subject to the sponsor's obligations to use aeronautical facilities for aeronautical use.

f. The following activities or items shall be prohibited in an aircraft hangar:

1. The storage of any vehicle, boat, or recreational vehicle that impedes with the storage or movement of the aircraft.

2. No aircraft hangar shall be used for any residential purposes.

3. Storage of ammunition or explosives in any quantity is strictly prohibited.

6.9 Insurance

The Executive Director/CEO shall establish insurance requirements as a condition of operating on the Airport for all persons engaging in activities and business on the Airport. These requirements may vary among different types of service providers and may be periodically adjusted to ensure that PMGAA, passengers and the interests of the public are adequately protected. Continuous proof of proper insurance and business licensing shall be provided to PMGAA as a condition of operating at or on the Airport.

6.10 Marking of Paved Areas

Other than as provided in tenant leases, no surface painting or marking of any paved area on Airport property shall be permitted without submission of measured drawings and written permission from the Executive Director/CEO ~~or designee~~.

6.11 Preservation of Property

No person or tenant shall destroy, injure, deface, or disturb any building~~, sign~~ (except hangar 24 or the ASR), sign, fence, or other structure, tree, lawn, or other property on the Airport; nor alter, make additions to, or erect any building or sign or make any excavations on the Airport without the approval of the Executive Director/CEO.

6.12 Regulation of Commercial Activities

a. No person shall occupy or rent space, carry on any business, commercial operations or other form of revenue-producing activity on the Airport without first obtaining a written contract, lease agreement or permit authorizing such activity, from the Executive Director/CEO.

b. The Airport Minimum Standards shall be met and maintained at all times by any individual, group of persons, business, or enterprise desiring to provide such commercial services or commodities at or on the Airport.

6.13 Storage and Equipment

No tenant or lessee of a hangar, shop facility, or other operational area specified by the Executive Director/CEO on the Airport shall store or stack equipment or material in a manner to be unsightly or constitute a hazard to persons or property. Areas of equipment storage shall be kept free of litter, trash, refuse, waste, rubbish, and debris.

6.14 Structural and Decorative Changes

Structural and decorative changes to any building, ramp, or other structure on the Airport require written approval of the Executive Director/CEO and must comply with local building codes and inspections and Airport Design Guidelines.

6.15 Trash Containers

Tenants shall place and maintain trash receptacles in the public areas of their premises, and other areas where necessary to promote and encourage the proper disposal of trash. All exterior trash receptacles on the Airport shall be sufficiently covered to prevent the inadvertent discharge of trash onto the Airport~~.~~ and prevent access by wildlife. The Airport encourages tenants to participate in recycling trash. Acceptable recyclable trash items are listed under the City of Mesa's Blue Barrel Recycling Program.

This page intentionally left blank.

CHAPTER 7: SECURITY REQUIREMENTS

7.1 Aircraft Security

When the condition or mission of an aircraft requires security guards or police officers, the owner or operator of the aircraft must coordinate this requirement with Airport Operations. The owner or operator of the aircraft is responsible for obtaining and paying security service personnel.

7.2 Airport Security Program

All persons using the Airport are subject to the Airport Security Program pursuant to TSA Regulation Part 1542.

7.3 Air Carrier

Air carrier tenants required to have a TSA approved Aircraft Operator Standard Security Program (AOSSP) shall maintain a current copy at the Airport.

7.4 Aviation Repair Station

Aviation Repair Stations covered under FAR Part 145 subject to TSA Security Directives shall maintain a security coordinator at all times.

~~7.4~~7.5 Challenge

All persons who are provided access to the Airport Restricted Area shall reasonably challenge any person not displaying proper identification media while in the Airport Restricted Area. Any person challenged to display an approved Airport identification media shall do so immediately upon request. Challengers are not expected to place themselves or others in a dangerous situation and shall not approach when they feel making a verbal challenge would do so, but rather the challenger is obligated to notify Airport Operations or the Mesa Police Department in such instances.

~~7.5~~7.6 Doors and Gates

a. At no time shall any Airport Restricted Area access gate be left open and unattended in a manner that would allow unauthorized access.

b. Security doors leading into the Airport Restricted Area shall be kept locked as required by the Airport Security Program.

c. Automated vehicle gates are for vehicle access only. No pedestrians shall use an

c.automated vehicle gate for pedestrian access.

d. Tenants shall be responsible for doors and gates located in their leased areas.Tenant security doors Security gates leading into the Airport Restricted Area shall be keyed tocontrolled and monitored by the Airport master keying systemAccess and Monitoring System.

~~7.6~~7.7 Employee Access Investigations

Employee access investigations in accordance with TSA Part 1542 and the Airport Security Program shall be conducted by employers for each employee. Certification of completion of the access investigation is required prior to PMGAA issuing any access materials.

~~7.7~~7.8 Escorting

No person shall escort or allow non-badged persons access to the AOA or other secure areas without first complying with requirements of the Airport Security Plan.

~~7.8~~7.9 General Aviation Aircraft

General Aviation aircraft are prohibited from entering the commercial passenger or cargo areas of the Airport unless otherwise coordinated in advance with Airport Operations and the Air Traffic Control Tower.

~~7.9~~7.10 Identification Media and Access Cards

a. Identification media and access cards issued by PMGAA are property of PMGAA and must be surrendered upon the request of Airport Operations personnel or Mesa Police.

b. No person shall loan or provide Airport identification media or access cards to anyone other than to whom the media was issued.

c. PMGAA-issued or approved identification media must be properly displayed on the outermost garment, above the waist, at all times while within the Airport Restricted Area.

d. PMGAA-issued or approved identification media shall not be mutilated or altered from its original form in any way, nor shall any such media be reproduced or copied in such a manner as to degrade the security of the identification system.

e. PMGAA-issued or approved identification media shall not be duplicated, photocopied, posted or likeness otherwise distributed.

~~7.10~~7.11 Restricted Areas

a. Only those persons specifically authorized by Airport Operations with proper personnel and vehicle identification are allowed access to the Airport Restricted Area, Air Operations Area (AOA) or Security Identification Display Area (SIDA) unless otherwise provided for under the Airport Security Program.

b. Pedestrians or motor vehicle operators observed in areas other than those designated for public use without authorization by the Executive Director/CEO will be considered trespassing and subject to arrest.

~~7.11~~7.12 Security Fence Line

A minimum clear area of six (6) feet shall be kept between the security fence line and any object that may be used to conceal persons along the fence line or that would aid any individual in gaining access to the Airport Restricted Area unless specifically approved by the Executive Director/CEO.

~~7.12~~7.13 Security Screening

All persons desiring to enter a sterile area are subject to security screening.

~~7.13~~7.14 Tailgating/ Piggybacking

No person or vehicle shall enter the Airport Restricted Area through an access ~~gate~~portal that was opened for or by an authorized person or vehicle unless under the direct escort and control of ~~an~~that authorized person. All persons and vehicles using any airfield access gate or secured door or gate shall ensure the gate or door is secured behind them prior to leaving the area to prevent unauthorized access.

~~7.14~~7.15 Tenant Security

Tenants and tenant employees are responsible for safeguarding doors, gates, and other forms of passageways between Airport Restricted Areas and public areas. Tenants are responsible for safeguarding aircraft and other private property entrusted to their care within the Airport Restricted Area or other locations on their leased premises.

~~7.15~~7.16 Violation of Security Regulations

Violation of security regulations may result in the immediate revocation of security privileges, revocation of access media, and denial of future entry into the Airport Restricted Area ~~may be denied~~. Any fines levied against PMGAA for security violations will be charged to the offending individual and tenant.

~~7.16~~7.17 Weapons

No person, except a peace officer, authorized air carrier employee, authorized Airport

employee, or a member of an armed force of the United States on official duty, shall carry any weapon, explosive, or flammable material on or about his person, openly or concealed, in the Airport Restricted Area without the written permission of the Executive Director/CEO. This section shall not apply to persons carrying firearms in cases, broken down or unloaded, when said firearms are being transported by air. No person shall

furnish, give, sell, or trade a weapon on the Airport.

This page intentionally left blank.

CHAPTER 8: SPECIAL EVENTS

8.1 Authorization

Specialized events require advance written coordination, regulation, and authorization by the Executive Director/CEO prior to the public disclosure or advertisement of the event. The authorization will be in the form of a letter of authorization from the Executive Director/CEO to the special event sponsor in which the sponsor is recognized as involved in the planning process for a specific type of event. Certain activities shall require an executed lease, operating agreement, deposit or permit with PMGAA. A City of Mesa event permit may also be required as determined by the City of Mesa.

8.2 Aviation Activities

a. A special event that involves aerobatic maneuvers by aircraft must be coordinated in advance with Airport Operations and the local FAA Flight Standards District Office.

b. Special events involving aerial activities that are not of a routine nature for the Airport will require the designation and approval of an "air boss" who is experienced in directing and controlling the aerial activities planned for the event.

8.3 Closures or Restrictions

All runway, taxiway, ramp area, landside, or public area closures or restrictions must be coordinated with Airport Operations and other users of the Airport well in advance of the event.

8.4 Coordination

The sponsor shall make arrangements for such things as auto towing, garbage pickup, and refuse cleanup for any and all persons attending or associated with the event. If the special event is expected to attract an attendance of 500 persons or more, the sponsor must coordinate road and highway impacts with City of Mesa Police, Maricopa County Sheriff's office, and Arizona Department of Public Safety or other affected jurisdictions. In addition, the sponsor shall coordinate public safety impacts with City of Mesa Police and Fire and arrange any necessary protection (security, ambulance, fire protection, Aircraft Rescue and Fire Fighting support). Air traffic impacts shall be coordinated and approved by the Air Traffic Control Tower Manager.

8.5 Damages

Event sponsors shall pay for all direct expenses related to the special activity and ~~compensate PMGAA for damaged property. If the sponsor fails to adequately perform~~

compensate PMGAA for damaged property.

If the sponsor fails to adequately perform trash and litter clean-up of the Airport or repair damaged property in a timely fashion as determined by Airport Operations, PMGAA may perform these functions and charge the sponsor accordingly.

8.6 Fees

The event sponsor shall provide a written disclosure of all special event fees charged to the public to the Executive Director/CEO. In addition, when fees are charged, the sponsor shall pay fees to PMGAA as specified by Lease or Operating Agreement.

8.7 Insurance

The special event sponsor will be required to obtain liability insurance for the event in an amount determined by the Executive Director/CEO. The sponsor shall provide proof of insurance policy identifying PMGAA as a "named insured" for the event.

8.8 Normal Ingress/Egress

All special events must be planned to accommodate the normal ingress and egress of motor vehicles for those persons involved in passenger carrier flights, general aviation users of the Airport, air ambulance, or business activities normally conducted at or on the Airport.

8.9 Plans

In addition to the required coordination elements, the sponsor shall prepare and present to the Executive Director/CEO written plans to handle adverse weather, dust, hazardous materials spills, emergency services, and public protection.

8.10 Special events

Special events include air shows, balloon festivals, air races, fly-ins, parachute team demonstrations, static displays for the public, aerobatic events, filming for television, movies, or commercials, and other events or activities not normally associated with the daily operation of the Airport.

This page intentionally left blank.

CHAPTER 9: GROUND TRANSPORTATION

9.1 Ground Transportation General Authority

a. PMGAA has established ground transportation operating procedures for all Ground Transportation Providers subject to A.R.S, Title 28, Chapter 30 operating at the Airport. These operating procedures are to ensure the most fair and consistent ground transportation service. They will provide the public with the safe and convenient passenger movement.

b. It is imperative that all Ground Transportation Providers abide by the terms of the Airport license agreement and these Airport Rules and Regulations. Ground Transportation Providers are subject to on site supervision and direction by any personnel designated by the Airport Executive Director/CEO. Any person who violates these rules and regulations will, at the discretion of the Authority or its authorized representative, be denied use of the Airport and its facilities.

c. The ground transportation rules and regulations contained herein supersede and cancel all other previous ground transportation rules and regulations set forth by the Authority and its facilities.

9.2 Ground Transportation Provider Insurance Requirements

a. Before commencing ground transportation operations at the Airport, Ground Transportation Providers shall submit to the Authority an original certificate of motor vehicle insurance with a reputable insurance company or companies evidencing PMGAA's minimum policy limits and which names PMGAA as the certificate holder and as additionally insured by endorsement. The Airport shall be notified 30 days prior to cancellation or non-renewal of said endorsement.

b. Vehicle insurance shall cover all automobiles owned, leased, hired, rented, borrowed or otherwise used by or on behalf of the Ground Transportation Provider.

c. PMGAA, its officers, officials, agents, employees and volunteers are to be listed as additional insured with respect to liability arising out of: activities performed by, or on behalf of, the commercial operator including automobiles owned, leased, hired, or borrowed by the Operator.

d. PMGAA, its officers, officials, agents, employees and volunteers shall be additional insured to the full limits of liability purchased by the Ground Transportation Provider even if those limits of liability are in excess of those required by permit.

e. Proof of insurance shall be available in each vehicle and provided when requested.

9.3 Conditions of Ground Transportation Provider

a. All Ground Transportation Provider vehicles shall be properly identifiable with company name logo or trade dress visible within 50 feet in front of the vehicle to enable passengers to identify the company name and address. Magnetic removable placards are not permitted.

b. All Ground Transportation Provider vehicles shall be validly registered in a state and must be able to produce proof of registration upon request. Ground Transportation Providers must provide proof of registration with the Arizona Department of Transportation if registration if required by A.R.S. Title 28, Chapter 30.

c. Every vehicle shall be structurally sound and maintained in such good condition as to provide for the safety of the public in accordance with each and every applicable requirement of A.R.S. Title 28 and Title 49.

d. All Ground Transportation Provider vehicles serving the Airport shall be properly maintained and operated in a clean, safe, and businesslike manner at the sole discretion of the Authority or its representative. Vehicles are subject to inspection by Airport Operations staff.

1. Air conditioners will be operated at all times when temperatures reach 85 degrees Fahrenheit or upon passenger request.

2. Heaters will be operated upon passenger request and sufficiently heat the interior of the vehicle.

3. Exterior paint shall be maintained free of oxidation and rust.

4. Vehicle shall be free of any sheet metal damage.

5. Vehicle shall be free of dirt, trash, and debris.

6. The exterior of each vehicle in service shall be kept clean from road dust, mud and grime.

7. The interior of each vehicle in service shall not contain offensive odors.

8. All vehicle interiors, trunk space and exteriors shall be kept clean and free of any damage. All vehicles shall have matching hubcaps and door handles. Trunks shall be kept clean and empty to accommodate passenger luggage.

9. All glass, including windshields shall be free of cracks and chips ¼ inch or larger.

9.4 Ground Transportation Provider Vehicle Driver Requirements

a. All drivers shall meet all Federal, State, and City requirements. Drivers shall possess a valid state issued driver's license, knowledge of the area and streets, ability to speak, read, and understand the English language.

b. All drivers operating Ground Transportation Provider vehicles must display or present valid company identification upon request.

c. Driver's Airport operating privileges may be revoked at the discretion of a representative of the Authority.

d. Drivers shall at all times be courteous, professional and informative when interacting with passengers, airport staff, and other drivers. Customer complaints relating to a driver's failure to meet the foregoing standards of conduct may provide grounds for the termination of the driver's operating privileges at the Airport.

e. Drivers will contact their company's Supervision for complaints regarding other drivers of the same company and will refrain from making contact with drivers of other companies.

f. Drivers shall not engage in any physical fighting or loud, boisterous verbal disputes while on the Airport. If a dispute develops between a driver and a passenger, or another driver, the driver should immediately contact airport staff to resolve the dispute.

g. All drivers operating commercial vehicles at the Airport shall be clean and neat in their personal appearance and shall be courteous to passengers loading or unloading at the Airport.

h. All drivers must carry vehicle registration and insurance in vehicle at all times.

9.5 Regulations and Licenses

a. The Ground Transportation Provider shall comply with all applicable local, state and federal regulations and abide by the Rules and Regulations of the Authority now in effect, or that may be promulgated from time to time, including but not limited to the utilization of loading zones, queuing areas, and other such traffic control arrangements as designated by Airport Management. The Ground Transportation Provider will provide the Authority with current copies of all applicable licenses from state or local authorities for areas the Operator proposes to serve.

b. The Ground Transportation Provider shall secure and pay the costs of all required licenses, supplementary equipment, permits, franchises, both of its employees and vehicles. The Operator will pay all taxes, fees, licenses, and moneys required by the Federal, state, or local governments for its operations at the Airport.

c. The Ground Transportation Provider shall maintain and operate its service in compliance with all requirements imposed pursuant to Title 49, Code of Federal Regulations, Department of Transportation, Subtitle A, Office of the Secretary, and Part 21 Nondiscrimination in Federally Assisted Programs of the Department of Transportation-Effectuation of Title 6 of the Civil Rights Act of 1964, as said regulations may be amended.

d. No Ground Transportation Provider vehicle operator shall engage in the business of picking up passengers at the Airport terminal without first obtaining a Ground Transportation License Agreement from the airport authority. A Ground Transportation License shall not be issued until the owner has completed an application form provided by PMGAA.

e. Ground Transportation Providers that are not licensed through the Airport and that attempt to pick-up passengers in any terminal related areas are subject to eviction without loading their client and may face criminal trespass charges.

Ground Transportation Providers shall pay license fees and report activity to the Airport Authority pursuant to the License Agreement. Fees will be based on either a one-time annual fee for each registered vehicle or a trip fee for each trip at the Airport Passenger Terminal, provided that the Ground Transportation Provider utilizes a GPS tracking/reporting application which is approved by the Airport Executive Director/CEO.

9.6 Access and Parking

a. All Ground Transportation Provider drivers shall operate their vehicles in a safe manner while operating at the Airport property. Excessive speed and / or reckless driving are strictly prohibited. Drivers will refrain from blocking crosswalks or thru lanes at all times.

b. All Ground Transportation Provider vehicles desiring to drop off passengers shall be permitted to use the designated passenger loading/unloading zone of the Airport terminal curbside for active unloading of passengers and their baggage. No parking shall be allowed in this area. Vehicles may be cited and towed away. Drivers are not

permitted to leave their vehicle unattended on the terminal curbside at anytime

c. Baggage delivery service vehicles must use the designated area for both loading and unloading baggage and are responsible for any charges incurred

d. Ground Transportation Provider vehicles not having a valid Ground Transportation License with the Airport are authorized to enter Airport property to discharge passengers only in accordance with this paragraph.

e. Ground Transportation Provider with a prior reservation from a passenger awaiting pick up may proceed to the designated area to await their client and are responsible for any charges incurred. When picking up a pre-arranged assisted needed passenger, Ground Transportation Provider may pick up their client at the terminal curbside provided the passenger is ready to load. Waiting along the curbside is strictly prohibited.

f. Passenger pick up by licensed pre-arranged shuttle operators is permitted only in the shuttle queue. Pre-arranged shuttle operators arriving early may stage in the Airport designated lot until the scheduled arrival time or actual arrival.

g. Passenger pick up by licensed Ground Transportation Provider vehicles other than taxicab or pre-arranged shuttle operators to include sedan/VIP type vehicles is permitted only in the designated parking lots, or along the terminal curbside provided the passenger is ready for pick up. Drivers of these vehicles shall be responsible for any charges incurred while staged in these lots. Sedan/VIP drivers parked in designated lots may meet & greet their clients inside the baggage terminal and will remain at least 15 feet away from Rental Car counters, concessionaires, and the baggage claim information counter.

h. Ground Transportation Provider vehicles shall enter the commercial vehicle queuing area only for the purpose of loading customers or passengers. Only those Ground Transportation Provider authorized vehicles shall have access to the taxi stand or pre-arranged shuttle queuing area.

i. Drivers may park in the passenger loading/unloading zones to drop off passengers only long enough to unload passengers and luggage at the curb. Vehicles left unattended will be subject to citation and/or towing enforcement.

j. There shall be no unattended vehicles parked in the queuing areas; vehicle drivers shall remain within 25 feet of their respective vehicles.

k. Limousines shall stage in designated lots. When contacted by their client and when their client states that they are ready for pick up, operators may then proceed to the terminal curbside and load their passenger(s).

l. Buses or coaches shall stage in designated lots. When contacted by their client and when their client states that their group is ready for pick up, buses or coaches may then proceed to a place along the terminal curbside designated by the Airport operator or operations personnel.

m. Transportation Network Company vehicles may stage in designated lots. When matched with a client ready to pick up, Transportation Network Company vehicles may then proceed to the designated pick-up curb location for loading. Transportation Network Companies may not stand or wait at the curbside for clients.

9.7 Soliciting

a. The authorized solicitation of passengers by a Ground Transportation Provider shall only be conducted by the first driver in line in the designated areas at the taxicab queue. Taxicab drivers may not refuse transportation of a passenger based on the length of transport. Driver and passenger communication shall be conducted in a courteous and professional manner. Drivers shall not make any misrepresentation of their service. Drivers shall not be loud and boisterous with/or in the presence of potential customers.

b. Soliciting passengers is an offense that may result in the loss of ground transportation Licenses. Drivers soliciting passengers or in any manner offering to transport passengers in non-designated areas may be subject to an NOV.

c. Off duty drivers are not allowed to loiter on airport premises. Any off-duty driver using a Ground Transportation Provider vehicle for personal use at the Airport shall utilize the public parking facilities and shall not load passengers.

9.8 Miscellaneous Provisions

a. The Ground Transportation Provider shall repair promptly, and at no cost to the Authority, any damages to property of the Authority, which the Operator or its representatives have caused. If repairs are not carried out promptly, the Authority shall cause repairs to be performed and bill the company for the cost.

b. No signs, posters or similar devices shall be erected, displayed, or maintained by the

~~b.~~Ground Transportation Provider on Airport premises without prior written approval of the Authority or its representatives.

c. Solicitation of business in any manner whatsoever upon Airport property is strictly prohibited. Cruising is specifically prohibited.

d. The Authority or its representatives shall have the right to restrict drivers or vehicles from operating at the Airport in noncompliance with Airport Rules and Regulations.

e. A Ground Transportation Provider may request that specific documents provided to the Airport be treated in a confidential or proprietary (collectively, "Confidential"), provided that the Ground Transportation Provider clearly labels the documents "Confidential". The Airport will notify the Ground Transportation Provider in writing of the public records request to view the documents, or any portion of the documents marked "Confidential". The Ground Transportation Provider will have seven calendar days from the date such notice is received to obtain a court order enjoining the release of the documents marked "Confidential". If the Ground Transportation Provider does not provide the Airport with a court order enjoining release of the documents, the Airport will make the documents requested available for inspection as required under the public records law, seven (7) calendar days after the written notice to the Ground Transportation Provider is received.

This page intentionally left blank.

APPENDIX A: DEFINITIONS

Advisory Circular: FAA publications that outline and describe recommended standards and procedures for numerous aviation entities.

Air Operations Area (AOA): That area of the Airport used or intended to be used for landing, takeoff, or surface maneuvering of aircraft. The AOA includes the active runways, taxiways, ramp and turf areas. The AOA is considered part of the Airport Restricted Area and is off-limits to the general public.

Air Traffic Control (ATC): A service operated by appropriate authority to promote the safe, orderly and expeditious flow of air traffic on or in the vicinity of the Airport.

Air Traffic Control Tower (ATCT): The Airport traffic control tower at Phoenix-Mesa Gateway Airport.

Aircraft (also Airplane, Balloon, Blimp, Ultralight, Helicopter): Any device or contrivance now known or hereafter invented that is used or intended to be used for flight in the air.

Aircraft Maintenance: The repair, adjustment or inspection of an aircraft by a pilot, owner or mechanic other than the routine cleaning, upkeep and servicing of an aircraft in preparation for flight. Minor repairs are characterized as normal, routine annual inspection with attendant maintenance, repair, calibration or adjustment or repair of aircraft and their accessories. Major repairs are characterized as major alterations to the airframe, power plant, propeller and accessories as defined in FAR Part 43.

Aircraft Operation: An aircraft takeoff, landing, touch and go (two operations), low approach and/or missed approach.

Aircraft Rescue and Fire Fighting (ARFF): The personnel, equipment and facilities on or off the Airport dedicated to dealing with aircraft accidents/incidents and all rescue and firefighting tasks, structural fires and other firefighting emergency activities.

Airport: Shall mean and have reference to all the areas comprising the Phoenix-Mesa Gateway Airport as now existing, or as the same may hereafter be expanded and developed, and shall include all of its buildings, facilities and appurtenances.

Airport Authority: PMGAA, a Joint Powers Airport Authority authorized under the laws of the State of Arizona, its successors and assigns, formed pursuant to A.R.S. §28-8521, et seq.

Airport Driver Endorsement: The authority issued by Airport Operations authorizing motor vehicle operations within the Airport Restricted Area. An Airport Driver Endorsement shall mean an indication of completed airfield driver training, and so noted on an individual's Airport security identification badge.

Airport Duty Manager: The designated management representative of PMGAA during emergency incidents and after regular business hours.

Airport Executive Director/CEO (also Executive Director/CEO). The Executive Director/CEO of PMGAA or his/her designee. The term "Executive Director/CEO" as herein used, shall include persons duly designated to represent the Airport Executive Director/CEO and to act on behalf of the Airport

Airport Minimum Standards: A separate document adopted and formally approved by the Airport Authority within which are detailed provisions outlining the minimum building size, performance or other standards acceptable by the Airport Authority for a business firm aspiring to do business at the Airport.

Airport Operations: Airport staff responsible for monitoring compliance with operations involving Airport airside and landside activities.

Airport Restricted Area(s)/ Restricted Area(s): Areas closed to access by the general public. These are limited access areas that the Executive Director/CEO, the FAA, TSA, or commercial aviation business owners have elected to restrict for purposes of security or safety. These areas include but are not limited to the Air Operations Area, Airport perimeter roadways, fenced-in areas, aircraft hangars and maintenance shops, fuel storage areas and hazardous materials storage areas.

Airport Rules and Regulations: A document adopted and formally approved by the Airport Authority within which are detailed provisions for the safe, orderly and efficient operation of the Airport.

Airport Security Program: A program developed in accordance with TSA Part 1542 and approved by ~~the~~a TSA Federal Security Director outlining Airport security requirements, methods and procedures for Phoenix-Mesa Gateway Airport.

Apron (also Ramp): Those areas designated by the Airport, both public and private/leased, designated by the Executive Director/CEO for the parking or storage of aircraft. These areas are usually restricted areas and involve activities such as enplaning and deplaning passengers,

servicing aircraft, and aircraft movements.

Arizona Revised Statutes (A.R.S.): the set of books which contains the constitution and laws

enacted by the Legislature to govern the state.

Based Aircraft: Aircraft that are "operational and airworthy", which are based at an airport for a majority of the year.

Emergency Vehicles: Vehicles that are painted, marked, lighted or escorted and used by ~~the police~~ law enforcement officers (or security officers), fire department (ARFF), ambulance or other Airport officials to carry out their daily duties or used in response to an emergency situation.

Engine Run-up: The operation of an aircraft engine at power settings in excess of those power settings needed for normal taxiing of the aircraft. Engine run-ups are usually conducted at relatively high-power settings in order to determine the performance of an aircraft engine.

Escort: A person authorized by the Airport to accompany a contractor or other persons within the Airport Restricted Area(s) in accordance with all FAA safety and security regulations and Airport-specified responsibilities.

Executive Director/CEO: Executive responsible for the enforcement of these Rules and Regulations to ensure the efficient, proper and safe operation of the Airport, but only to the extent authorized by law or properly delegated by said Airport Executive Director/CEO.

FAA: The Federal Aviation Administration.

FAR: The Federal Aviation Regulations as written, approved, and published by the FAA.

Flight Standards: FAA standards for promoting safe air transportation by certification and oversight of airmen, air operators, air agencies, and designees.

General Aviation: All categories and types of aviation/aircraft in the U.S. except for certified air carriers (under FAR Part 121~~)~~ or Part 129) and Part 129 Foreign Air Carriers and Department of Defense military aircraft.

GPS Tracking/Reporting Application: Any online-enabled application, software, website, or system that is offered or used by the authorized provider and that enables a potential passenger to arrange a ride with a Ground Transportation Provider driver and utilizes Global Positioning Satellite for tracking and reporting.

Ground Transportation: Modes of vehicle transportation to facilitate the movement of passengers and visitors to and from the airport.

Ground Transportation Provider: Any entity that provides Ground Transportation services for a fee.

Hangar: Any fully or partially enclosed storage space for an aircraft.

Hazardous Material: A substance or material in a quantity or form that may pose an unreasonable risk to health or safety, or property when stored, transported or used in commerce as defined in applicable Federal, State, and local environmental laws.

Incident Commander: The individual responsible for directing and / or controlling resources during an Airport emergency; the leader of Unified Incident Command.

Lease: A contract granting occupation or use of property during a certain period in exchange for a specified rent.

Movement Area: Those areas of the Airport under the control of the Air Traffic Control Tower including runways, taxiways, and helipads designated and made available for the landing, take-off, and taxiing of aircraft and which require a clearance from the Air Traffic Control Tower prior to entering.

Notice of Violation (NOV): An NOV is a form issued by Airport Operations personnel for violations of any rules and regulations governing the Airport.

Notice to Airmen (NOTAM): Information issued by a representative of the Executive Director/CEO, FAA, the Air Traffic Control Tower or other authorized official advising pilots of temporary changes to published information regarding Airport facilities, conditions, or other items that may affect safe flight.

Operating Agreement: A contract granting short-term occupation or use of Airport facilities (i.e. runways, taxiways) during a certain period in exchange for specified rent and/or fees. Operating agreements are used for, but not limited to, flight-testing and flight training operations.

Park or Parking: The standing of an aircraft or vehicle whether occupied or not.

Permit: A written authorization issued by the Airport Authority that allows specific activities or the temporary use or occupancy of certain areas or facilities at the Airport.

Person: Shall mean an individual, firm, general or limited partnership, corporation, company, limited liability partnership, trust, association, or any trustee, receiver, assignee or similar representative thereof leasing, subleasing, making application for, or using any land or facility at the Airport.

Rates and Charges: Airport fee structure approved by the Board for use of airport infrastructure, facilities, and equipment.

~~**Restricted Area(s):** Areas closed to access by the general public. These are limited access areas that the Executive Director/CEO, the FAA, TSA, or commercial aviation business owners have elected to restrict for purposes of security or safety. These areas include but are not limited to the Air Operations Area, Airport perimeter roadways, fenced-in areas, aircraft hangars and~~

~~maintenance shops, fuel storage areas and hazardous materials storage areas.~~

Secured Area: That portion of the Airport where ~~aircraft operators~~domestic air carriers and foreign air carriers enplane and deplane passengers and sort and load baggage and any adjacent areas that are not separated by adequate security measures.

Security Identification Display Area (SIDA): That portion of the Air Operations Area (AOA) where each person is required by federal law to continuously display, on an outermost garment, an Airport-approved identification badge. Any person observed in the SIDA not displaying the identification badge and not accompanied by an Airport-approved escort must be promptly reported to a security officer or other designated authority.

Soliciting: The act of ~~approaching a passenger, for which prior arrangement for transportation has not been established and offering ground transportation~~entreating, enticing, or otherwise requesting money, business, or exchange of goods/ services~~.~~ outside of authorized areas.

Sterile Area: The portion of the Airport defined in the Airport Security Program that provides passengers access to ~~boarding~~board aircraft and to which the TSA generally controls the access through the screening of persons and property ~~generally controls the access.~~.

Transportation Network Company (TNC): An entity that has been issued a permit by the State of Arizona that operates in the State of Arizona, that uses a digital network or software application to connect passenger(s) to transportation network services provided by transportation network drivers, and that may but is not deemed to own, operate of control a personal motor vehicle of a transportation network driver.

TSA: The Transportation Security Administration.

UAV: Term is used interchangeably with Unmanned Aerial System (UAS) and Drone. An unmanned aerial vehicle (UAV) is an aircraft without a human pilot on board. UAV's have a ground-based controller, and a system of communications between the two. Civil UAV operations are regulated under FAA Part 107.

Vehicle: Shall mean all conveyances, except aircraft.

This page intentionally left blank.

APPENDIX B: FLY FRIENDLY NOISE ABATEMENT PROCEDURES

Unless otherwise directed by the Tower, please comply with the following:

1. Runway 30 is designated as the "calm wind" runway.
2. Use best rate of climb, consistent with safety.
3. Runway 12C/30C or 12L/30R for jet aircraft pattern work (1700' AGL – above ground level) is preferred. When using Runway 30C or 30R, start right crosswind turns as soon as practical to avoid residential areas north of the Airport (complete turns within 3.5 DME).
4. On departure from 30L, left turn after end of runway to minimize low overflights of the Gateway Campus.
5. Military aircraft terminate afterburner use when safe to do so.
6. Jets are requested to use NBAA Standard Noise Abatement Departure or comparable aircraft manufacturer procedures.
7. Propeller aircraft are requested to use AOPA Noise Awareness Steps.
8. Helicopter traffic: please avoid low overflights of the Gateway Campus. Use a Northwest or Southwest arrival-departure corridor.
9. Compliance with the Fly Friendly procedures is at the pilot's discretion.

SAFETY ALWAYS COMES FIRST!

Phoenix-Mesa Gateway Airport Authority
5835 S Sossaman Road
Mesa, Arizona 85212-6014
www.gatewayairport.com

Board Action Item

Re: Resolution 21-50

To:	**Board of Directors**
From:	**R. J. Draper, P.E., LEED AP, CM Engineering & Facilities Director**
Through:	**Scott Brownlee, Deputy Director/COO**
	J. Brian O'Neill, A.A.E., Executive Director/CEO
Subject:	**Preconditioned Air Units – CIP 1214**
Date:	**November 16, 2021**

Proposed Motion
To authorize the purchase of two (2) skid mounted Preconditioned Air Units (PCAir) from ITW GSE, Inc in an amount not to exceed $190,129.44 under CIP 1214.

Narrative
A number of our current Preconditioned Air Units (PCAir) have reached the end of their useful life cycle and are in need of replacement. The current costs to repair and maintain these units is increasing significantly and the downtime causes service issues for our airline partners.

The Request for Proposal (RFP), Solicitation 2022-011-RFP was issued on September 13, 2021 and advertised in the Arizona Business Gazette on 9/16, 9/23, 9/30 and 10/07/2021; the Notice of RFP was also posted on the AzAA and ACI-NA Websites as well as the Phoenix-Mesa Gateway Airport Authority Website. In addition, the RFP was emailed to a list of five (5) prospective firms. The Airport received three proposals:

Cavotec USA, Inc.
ITW GSE, Inc.
Twist Aero, LLC

After reviewing the submitted proposals, the Evaluation Panel unanimously selected ITW GSE, INC. Their proposal best satisfies the criteria of the RFP in all categories, specifically they have demonstrated successful performance and longevity in harsh desert climate, warranty, spare parts availability and met all requirements and minimum specifications as required in the RFP.

Fiscal Impact
This purchase was included in the FY22 Capital budget and is funded under CIP 1214 with Non-grant funds.

Attachment(s): Proposal

RESOLUTION NO. 21-50

WHEREAS, the Phoenix-Mesa Gateway Airport Authority ("Authority"), a joint powers airport authority formed pursuant to Arizona Revised Statute §28-8521 *et seq.* owns and operates the Phoenix-Mesa Gateway Airport ("Airport"); and

WHEREAS the Authority desires to authorize the purchase of two (2) skid mounted Preconditioned Air Units (PCAir) from ITW GSE, Inc in an amount not to exceed $190,129.44 under CIP 1214.;

NOW, THEREFORE, BE IT RESOLVED by the Board of Directors of the Authority as follows:

> **The Board of Directors of the Authority hereby authorizes the purchase of two (2) skid mounted Preconditioned Air Units (PCAir) from ITW GSE, Inc in an amount not to exceed $190,129.44 under CIP 1214.This resolution also authorizes the Chair or Executive Director/CEO to make such additions, deletions, and changes as may be approved by the Chair or Executive Director/CEO, necessary to carry out the purposes and intent of this Resolution.**
>
> Passed and adopted by the Authority this 16th day of November, 2021.

John Giles, Chair

ATTEST:

Misty Johnson, Clerk of the Board

APPROVED AS TO FORM:

Jill Casson Owen, Attorney

Phoenix-Mesa Gateway Airport

REQUEST FOR PROPOSALS
SOLICITATION #2022-011-RFP FOR
TWO (2) PRECONDITIONED AIR UNITS

SUBMITTAL COVER SHEET

Name of Offeror:	ITW GSE, Inc
EIN#:	26-1568318
DUNS#:	05-127-1278
Principal Address:	11001 US Hwy 41 North
	Palmetto, FL 34221
Primary Point of Contact:	Greg Rentfro
Phone:	469/968-6082
Email:	grentfro@itwgse.us

The undersigned hereby affirms that:

- The undersigned is a duly authorized agent of the Offeror
- The undersigned has read and understands all terms, conditions and commitments contained within the RFP and any addenda issued and fully understands and accepts these terms by submission of a proposal.
- The submission is being offered independently of any other Offeror and did not involve collusion or other anti-competitive practices.

By: Greg Rentfro
Signature

October 8, 2021
Date

Greg Rentfro
Printed Name

Area Sales Manager
Title

Tab A

Table of Contents

It's all about connections

SOLICITATION NUMBER: 2022-011-RFP – Pre-Conditioned Air Units

Table of Contents

Submittal Cover Sheet		**Page 1**
Tab A – Table of Contents		**Page 3**
Tab B – General Information		**Page 4**
Cover Letter		**Page 5**
Tab C – Equipment Description		**Page 6**
General Description		**Page 7-12**
HMI and Operation Overview	*Page 8*	
Monitoring System	*Page 9*	
Photo of Pad Mounted 3400	*Page 10*	
ITW GSE Formal Quote	*Page 11*	
Exhibit I (Compliance Statements)		**Page 13**
Attachment A		**Page 17**
Attachment B		**Page 18**
Tab D – Desert Equipment Prescence		**Page 20**
Tab E – Warranty Information		**Page 21**
Attachment C		**Page 22**
Warranty Statement		**Page 23**
ITW GSE Standard T&C		**Page 24**
Tab F – Parts Availability		**Page 28**
Attachment D		**Page 29**
Tab G – Price Proposal		**Page 30**
Attachment E		**Page 31**
(reference Formal Quote for specifics, Page 11)		
Tab H – Ancillary Equipment		**Page 32**
Attachment F		**Page 33**
Tab I – Supplemental Materials		**Page 34**
Photo of 3400		**Page 35**
Specification Sheets		**Page 36**
Tab J– Appendices		**Page 40**
Attachment G (Standard Certifications)		**Page 41**
Attachment H (Waiver)		**Page 42**
Attachment I (Offer Agreement)		**Page 43**
Attachment J (References)		**Page 44**
Tab K – Addenda Acknowledgement		**Page 45**
Attachment K		**Page 46**

Tab B

General Information

October 10, 2021

Re: SOLICITATION 2022-011-RFP – Pre-Conditioned Air Units, Phoenix Mesa Gateway Airport

Company Contact:
ITW GSE, Inc.
11001 US Hwy 41 North
Palmetto, FL 34221
Telephone: 1-941-721-1000

Sales Contact
Greg Rentfro
Area Sales Manager
grentfro@itwgse.us
Telephone: 469-968-6082

Additional Company Information:

TIN: 26-1568318
FL Resale Certificate: 78-8013977358-8
Cage Code: 12867
DUNS #: 05-127-1278

ITW GSE, Inc. is a Delaware corporation and a subsidiary of Illinois Tool Works, Inc. (ITW); a Fortune 200 corporation. ITW is a diversified manufacturer of advanced industrial technology that employs nearly 51,000 people worldwide and is based in Glenview, Illinois, USA, with operation in 56 countries.

ITW GSE is a leading supplier of ground power units, pre-conditioned air units, cables and hoses, with roots stretching back nearly 100 years. We provide premium GSE solutions that are tailored to your needs, Our equipment is used at airports around the globe: from bitter cold of Minneapolis to extreme heat of the Middle East and high humidity of Guam: ITW GSE has delivered more than 80,000 units in over 100 countries; our products are proven to perform.

ITW GSE has offices and personnel located globally to support markets in every region. We have manufacturing facilities in Palmetto, FL and Odense, Denmark and maintain sales offices in the United Arab Emirates and Singapore. For North America, our sales, service and support are based in Palmetto, FL.

ITW GSE is pleased to offer the following proposal in response to Solicitation 2022-011-RFP for quantity (2) Preconditioned Air Units and ancillary equipment. We have proposed our 3400 PCA (60Ton) per the specifications outlined in the posted solicitation documents.

The ITW GSE 3400 PCA meets or exceeds the requirements outlined in SOW.

- Reference *Exhibit I* for specific capabilities regarding the outlined specifications
- A formal quote is provided and attached following photo of 3400

Prior to April 2018, our products were sold under the AXA Power, Hobart, Houchin, Military and J&B Aviation brands. Today, we have merged these brands and sell the entire ITW GSE portfolio under the single name “ITW GSE.” We are still the same great company, with the same great products and great people supporting over 80,000 delivered units in more than 100 countries.

We look forward to continued support of your equipment needs at Phoenix Mesa Gateway.

Sincerely,

Greg Rentfro
Area Sales Manager

Tab C

Equipment Description

October 10, 2021

Solicitation Number: 2022-011-RFP– Pre-Conditioned Air Units

ITW GSE is pleased to offer the following proposal in response to Solicitation 2022-011-RFP for quantity (2) Preconditioned Air Units and ancillary equipment. We have proposed our 3400 PCA (60Ton) per the specifications outlined in the posted solicitation documents.

The ITW GSE 3400 PCA meets or exceeds the requirements outlined in SOW.

- Reference *Exhibit I,* for specific capabilities regarding the outlined specifications
- A formal quote is provided and attached following photo of 3400

General Equipment Description: 3400 PCA, Pre-Conditioned Air Unit

ITW GSE 3400 PCA, 130/2X(H) 60Ton PCA with Heat, Part # AP-572516

The proposed ITW GSE 3400PCA is a self-contained, direct expansion unit to provide comfortable air conditioning and heat to aircraft while on the ground. The 3400 suits all types of aircraft and is rated 60 Tons. It is the only modular PCA on market and the first to offer stepless regulation.

Compressors and Main blower are powered by individual VFDs (Variable Frequency Drive), all regulated and controlled by a central control module, enabling the PCA to always match the air and cooling requirement with the actual need. We refer to it as “Stepless Regulation”.

The VFD controls the speed of compressors and blowers so that components are not running at full power all the time. 3400 components run at the capacity needed, not at maximum design capacity. This allows lower energy consumption than traditional designs and provides lower mechanical stress thereby boosting reliability and service life.

The modular design of the 3400 is based on interchangeable cooling modules. Modules can be quickly changed if one module needs repair. The 3400 can continue to provide cooling/heat at the gate (at reduced capacity) even if one module is faulty and/or removed…less down time at the gate!

The modular design provides easy maintenance and cleaning; thus maximum “uptime” with reliably quick MTTR (Mean Time To Repair). All the ITW GSE equipment utilize a common design platform requiring less training of personnel, fewer spare parts and greater return on investment.

Key Attributes (3400 PCA):

- The 60Ton, 3400 PCA is equipped with two cooling modules that can be easily replaced in event of malfunction. The unit remains operational with one module at reduced the overall capacity of the PCA
- The cooling circuit is a high efficiency design with hermetically closed scroll compressors, specially designed for variable frequency control using R410A refrigerant.
- VFDs insure the 3400 uses a minimum of energy - components operate at needed performance level
- Rigid all-aluminum micro-channel condenser coils ensure good heat dissipation while large

evaporator face area insure efficient cooling of the air supply with multiple step-cooling efficiently condenses the air humidity reducing need for hot gas bypass

- The main blower is a direct driven centrifugal type fan, located in the middle of the unit and is easily accessed by removing a side cover. The blower is mounted on vibration dampers with flexible connections between the main blower and the stainless-steel air ducts to reduce noise and vibration
- Cooling modules are accessible on sliding trays and are removable with forklift. Cooling modules are easily removed for maintenance, without any onsite welding.
- Removal of a module will also allow for easy access to the internal stainless-steel air ducts for inspection and cleaning.The electrical panel is accessed from the opposite side of the main blower behind hinged covers. All the modules, components and fuses in the electric panel can be easily accessed and quickly replaced. The magnetics are placed just behind the electrical panel.

Operator Interface:
User Interface will be mounted to the 3400 unit. The 3400 shares the same common platform interface as PC2400 and 3400 PCA currently used at AZA. This insures easier training and user familiarity.

The user interface is equipped with a Liquid Crystal Display (LCD) viewable in all weather conditions. From this display, all relevant operational data is clearly visible, including:

- Default Mode (home screen): status of the GPU and its different functioning parameters
- Information Mode (parameters): relevant parameters to guide the maintenance staff
- Black Box Mode: record of errors that have resulted in an alarm, including data log history of previous errors up to at least the last 100 records.
- Power Log Mode: date, time and power consumption during which the PCA was in operation, including the data log history of previous usage (up to the last 100 records).
- Setup mode: allows the operator / technician to change the functional parameters of the PCA. Setup mode is protected to prevent unauthorized changes to any of the functional parameters.

Interface Controls and Indicators:

Status Lights

- ‘STATUS’ green or blue for ‘ready for use’ and red for ‘fault’ *

Single button for control of:

- ‘PCA ON’
- ‘STOP’
- ‘RESET’
- ‘EMERGENCY STOP’ normally closed push button

Aircraft and Mode selection

- Individual buttons for selection of aircraft type and mode of operation

Emergency Stop Button

- Remote Control Station/User interface is equipped with a front mounted, turn-to-release EPO

Monitoring System:

The 3400 is supplied standard with a Remote Operator Interface that relays operational status of the equipment via LCD panel in text form. Data available comprehensive range of internal and external parameter measurements and information e.g. temperatures, pressures, air flow, voltage, time, date etc. Additionally, the 3400 maintains two logs of historical data:

1) Black Box the last 100 errors detected together with all relevant parameters and status information available in connection with a shut-down (fault) and warnings (clogged filter, inoperable module, etc.) will be recorded in Black Box events as will specific cause for warning and/or fault. Additionally, the Black Box will provide specific error code and time stamp related to the event to assist with diagnostic trouble shooting.

2) Power log which contains the time in use and the power consumption for the last 100 operations.
   The above information can be viewed by personnel at the panel. The data can also be saved to a USB for records or technical assistance. The 3400 is also equipped with a TCP/IP (RJ45) communication port for supervision and monitoring of the Ground Power Unit (GPU) by the means of a central computer. All on screen data available at the GPU is available for external communication via MODBUS to your BMS system.

External Communication/Monitoring is available. The ITW GSE 3400 is equipped with a TCP/IP (RJ45) communication port for remote supervision and monitoring of the PCA. The port is located on the Control Board (A1). The protocol is limited to MODBUS TCP/IP. A BACnet gateway can be added in the field at any time if needed. The data available from the 3400 is comprehensive and should meet most requirements.

- The most common data requests are: system in use, system in standby and system in fault.
- Modbus addressing provides a comprehensive range of internal and external parameter measurements and information, e.g. voltages, currents, temperatures, time, date etc.

The PCA 3400 can also be equipped with access control to allow and track authorized users of the unit.

Operation of 3400

- Aircraft arrives;
- The ground service operator unrolls and connects the PCA hose to aircraft
- Aircraft type and mode of operation are selected on panel by the ramp operator
- The PCA is turned on at the control panel, compressors and blowers will ramp up providing cooled air (or heat) to aircraft
- The PCA has (2) condensate pumps that will discharge condensate at rear of unit. As an option, a hose can be attached to divert water in specific direction if needed
- The PCA is in operation until shutdown by the operator using the on/OFF/Reset button, not EPO
- Blower will ramp down, hose can then be disconnected and coiled

It's all about connections

Photograph: Pad Mount, PCA 3400 (60Ton) Gate 4 AZA, Phoenix-Mesa Gateway Airport

It's all about connections
11001 US Highway 41 North, Palmetto, FL 34221 USA

Page:	1 of 2	QUOTE NO:	**QJGR081520-1A**
TO:	Phoenix-Mesa Gateway Airport Authority	DATE:	8/15/2020
	5835 S. Sossaman Road		
	Mesa, AZ 85212	FROM:	Greg Rentfro
Attn:	Marian Whiden		
Phone:	408/988-7646	PHONE:	469/968-6082
Email:	mwhilden@gatewayairport.com	EMAIL:	grentfro@itwgse.us
RE:	***Soliciation 2022-011 RFP***		

WE ARE PLEASED TO OFFER THE FOLLOWING QUOTATION:

ITEM #	QTY	MODEL/ PART NO.	DESCRIPTION	UNIT PRICE U.S.D.	TOTAL U.S.D.
001	2	**PCA130/2XH**	***ITW GSE PCA 3400, 130: Pad Mount with Stands, 60Ton Rating***	$ 80,571.00	$ 161,142.00
		AP 572516	*** INPUT:** 3 x 480V, 50/60Hz (150amps MCA, 175amps MOP)		
			* Single Outlet (14" connection)		
			* Airflow: up to 130 Kg/min (Max) @ 8500 Pa (Max)		
			* 2 cooling circuits; Quick Swap, Modular Design		
			* 72kW heat		
			* Refrigerant: R410a		
			* Includes temp sensor at output duct and remote control panel		
			* VFD on compressors and main blower		
			* Communications via MODBUS, TCP/IP		
		272432	* Mounting Feet, (6 per unit) for pad mount on ramp		
			* FINISH: RAL7035 (light grey)		
			* Warranty: 2 year (per Hobart standard terms)		
			**** Remote mount cabin sensor **NOT** included*		
001a	**2**	**Hose Set (Ducting)**	**Consists of following components listed below in grey. Quantity of goods in each 'set' shown in** *(parenthesis)* **Approximately 80' overall length assembled**	$ 1,016.00	$ 2,032.00
	(Qty 1)	***AP1442-03SS***	** 90Degree Flat Duct Elbow*		
	(Qty 3)	***AP1453-25***	** Air-A-Plane, Flat, Zipper/Velcro (price includes 3, 25' Sections)*		
	(Qty 1)	***AP1453-01***	** Air-A-Plane Hose, 14" - 8" Adapter*		
	(Qty 1)	***JB729-13-360***	** Swivel Aircraft Connector Assembly*		
	(Qty 2)	***HS128***	** Clamp, 8"*		
	(Qty 2)	***HS224***	** Clamp, 14"*		
003	*2*	**Add Alternate 1**	Extended Warranty, additional 12 months coverage beyond quoted 24month warranty (total coverage 3 years). Covers electrical items does not include wear and consumable items	$2,756.00	$ 5,512.00
004	*2*	**Add Alternate 2**	**JB680-8U**, Stand alone hose reel, 80' capacity for easier handling and storage of PCA hose	$ 1,415.00	$ 2,830.00
005	**2**	**Add Alternate 3**	**972028-B**, Remote EPO, EPO removed from primary operator HMI and located to rear of PCA. Function of existing EPO on remote panel is then a normal "off" button allowing normal shutdown sequence of equipment in lieu of emergency shut down (removal of all power) all compoenents	$ 300.00	$ 600.00

ENCLOSED:	Data Sheet
FOB POINT:	PALMETTO, FL, Freight not included
TERMS:	Net 30 Days on Approval
VALIDITY:	60 Days
SHIPMENT:	**8-12 weeks ARO : Subject to availability when ordered**
WARRANTY:	ITW GSE Standard Terms & Conditions (current rev.) Apply

Greg Rentfro

Greg Rentfro
Area Sales Manager
grentfro@itwgse.us

Terms and Conditions of Sale may be viewed on our website @ www.itwgse.com

BUYER: Sales of GSE Holdings, doing business as ITW GSE Hobart, ITW GSE J&B Aviation, ITW GSE Military ("ITW GSE") products and services are expressly limited to and made conditional on acceptance of ITW GSE Terms and Conditions of Sale, dated 28. April 2015, found at <http://itwgse.com/us/terms-and-conditions-of-sale/>. Any other Terms, additional or different, are hereby rejected. Commencement of work by ITW GSE or acceptance of delivery of products by the customer constitutes acceptance of the "Terms and Conditions of Sale."

- ***This equipment is not to be exported to or used in any country named on the U.S. Government's list of restricted nations.***
  All shipments are subject to review by U.S. Export offices
- ***Order confirmation is subject to a disclosure statement declaring end-user and country.***

Proprietary and Confidential

It's all about connections
11001 US Highway 41 North, Palmetto, FL 34221 USA

Page:	2 of 2	QUOTE NO:	**QJGR081520-1**
TO:	Phoenix-Mesa Gateway Airport Authority	DATE:	8/15/2020
	5835 S. Sossaman Road		
	Mesa, AZ 85212	FROM:	Greg Rentfro
Attn:	Marian Whiden		
Phone:	408/988-7646	PHONE:	469/968-6082
Email:	mwhilden@gatewayairport.com	EMAIL:	grentfro@itwgse.us
RE:	***Soliciation 2022-011 RFP***		

WE ARE PLEASED TO OFFER THE FOLLOWING QUOTATION:

ITEM #	QTY	MODEL/ PART NO.	DESCRIPTION	UNIT PRICE U.S.D.	TOTAL U.S.D.
006	*1*	**Commissioning and Training**	Start up and Training, on-site to be conducted in same visit, Travel and per diem included, one day on site	$ 1,800.00	$ 1,800.00
007	1	**Freight Out**	FOB Palmetto with freight prepaid to AZA, zip code 85212. Covers (1) dedicated 'conestoga', does not include unloading or storage at destination	$ 6,100.00	$ 6,100.00
			NOTE: Prices do not include any federal or local sales or use taxes.		

ENCLOSED:	Data Sheet	**Total**	**$ 180,016.00**
FOB POINT:	PALMETTO, FL, Freight not included	*Greg Rentfro*	
TERMS:	Net 30 Days on Approval		
VALIDITY:	60 Days	Greg Rentfro	
SHIPMENT:	**8-12 weeks ARO : Subject to availability when ordered**	Area Sales Manager	
WARRANTY:	ITW GSE Standard Terms & Conditions (current rev.) Apply	grentfro@itwgse.us	

Terms and Conditions of Sale may be viewed on our website @ www.itwgse.com

BUYER: Sales of GSE Holdings, doing business as ITW GSE Hobart, ITW GSE J&B Aviation, ITW GSE Military ("ITW GSE") products and services are expressly limited to and made conditional on acceptance of ITW GSE Terms and Conditions of Sale, dated 28. April 2015, found at <http://itwgse.com/us/terms-and-conditions-of-sale/>. Any other Terms, additional or different, are hereby rejected. Commencement of work by ITW GSE or acceptance of delivery of products by the customer constitutes acceptance of the "Terms and Conditions of Sale."

- ***This equipment is not to be exported to or used in any country named on the U.S. Government's list of restricted nations. All shipments are subject to review by U.S. Export offices***
- ***Order confirmation is subject to a disclosure statement declaring end-user and country.***

Proprietary and C

Phoenix-Mesa Gateway Airport

Exhibit 1

TECHNICAL SPECIFICATIONS AND EXPLANATIONS FOR PRECONDITIONED AIR UNITS

GENERAL CHARACTERISTICS

1. DEFINITIONS OF APPLICABLE CODES REQUIREMENTS

NEC (National Electric Code)
IEEE (Institute of Electrical and Electronic Engineers)
ASHRAE (American Society of Heating, Refrigerating and Air-Conditioning Engineers)
ASHRAE 161-2013
ASME (American Society of Mechanical Engineers)
ANSI (American National Standards Institute)
AHM (Airport Handling Manual)
MIL-STD (United States Military Standard)
CSA (Canadian Standards Association)
ETL (Intertek Testing Services)
UL (Underwriters Laboratories)
NEMA (National Electrical Manufacturers Association)

2. EXPECTED USE & WARRANTY

This specification describes a skid mounted DX (direct expansion) preconditioned air unit designed to be capable of cooling and heating commercial or military aircraft. Ambient outside air will be returned to the unit for filtering and conditioning to then be supplied using flexible duct to the aircraft for the purpose of maintaining a cabin temp of 74 degrees Fahrenheit. A minimum two (2) year standard warranty is required on the entire unit and all apparatuses.

Units will be pad mounted for permanent placement (not trailer or cart mounted). Contain a modular sub- frame design which secures components allowing removal for maintenance, service and repair. Units do not need to be forklift capable.

3. CHARACTERISTICS

GENERAL RATING

Cooling Capacity: 60 Ton; 720,000Btu/hr.

Input Power

AC Input Voltage: The unit will operate with input voltages not varying more than plus 10% or minus 15% of the source's nominally rated voltage. Nominal ratings are: 480 vac. Comply

AC Input Frequency: The unit will operate on input power frequencies of 60 Hz. Comply

Input Current Requirements at Rated Load: The nominal input current requirements for the unit at rated load are:

Input Volts	Current (Amperage)
480	165

Specifically: 145amps (line), 170amps (MCA), 200amps (MOP) at 480V

Input Inrush Current: On start up the inrush current shall not exceed 120% of that input current required when the unit is operating at rated load output. Comply

Input Power Factor: The input power factor shall be .95 or greater at loads 25% of or greater than the nominal rated load for the unit. Comply

Input Circuit Breaker: The unit will contain an internally mounted circuit breaker on the input power lines to allow the input power to be removed in the case of a fault or for maintenance. Comply

Circuit Harmonics (Total Harmonic Distortion): Total harmonic distortion shall not exceed 10% with any rated load up to 100% load. Comply

Output (Supply) Air

Air Temperature: Supply air temperature shall be maintained at 35 degrees Fahrenheit when ambient conditions reach 100 degrees Fahrenheit at standard atmospheric pressure of 29.9 inHg. Comply

Air Volume: Air supplied to the aircraft at a variable volume with capabilities of maintaining 250lb/min.
exceed, capable volume 280lb/min

Capacity Control: Cooling capacity control achieved by frequency modulation in order to meet then maintain supply and cabin temperatures according to load demands. Comply

Air Quality: Supplied air to be filtered to conditions exceeding ASHRAE 161-2013. Comply

Fault Systems

The unit will be capable of monitoring the following or similar items and shutting down in the event they are out of tolerance. The faults listed below will be displayed in plain English on a minimum two-line LCD text display.

Over-Current Detected
Control Fault Detected
Low Refrigerant Pressure
High Refrigerant Pressure
Low Supply Air Temperature
High Supply Air Temperature
Low Supply Air Pressure
Compressor Overload

Indicators Comply with intent, exceptions noted below

A minimum two-line LCD text display with the following or similar in plain English text:

System State (On, Off, Defrost, Fault)
Stage Indicators No 'stages' in design, VFD controlled compressors
Ambient Air Temperature
Supply Air Temperature

Suction Refrigerant Pressure
Evaporator Saturation Refrigerant Temperature
Suction Refrigerant Temperature
Compressor Discharge Temperature
Condenser Saturation Refrigerant Temperature
Liquid Line Pressure
Super Heat Measurement — exception -superheat is not calculated and displayed on panel
Sub Cool Measurement — exception - sub cool is not calculated and displayed on panel
Accumulated kilowatt-hours
Unit settings (temperature, air volume)
Date and time
Event and fault history:

The most recent 100 events(start/stop/fault/reset) stored internally and are available to be viewed from the minimum two- line LCD display on the unit. The following data for each event is stored:

Time of data sample
Date of data sample
Kilowatts used for docking cycle
Fault (with pertaining parameters at time of fault)

A keypad will control which of the above information is displayed.

LEDs will indicate the following items:

Start push button pressed
Stop push button pressed

Comply

Front panel lights will indicate similar to the following: Comply with intent

Red light steady – fault occurred
Yellow light steady – input voltage applied to unit — BLUE light steady when input power applied
Green light steady – unit in cooling mode

Note: differences in colors from above may be accepted by PMGAA but should be clearly noted in Offeror's proposal.

Switches and Controls

The following switches and controls will be mounted on the outside of the main cabinet of the unit:

Stop push button – for stopping / resetting the unit
Start push button – for starting the unit

Single Button for On/Off/Reset located on HMI EPO is panel mounted
EPO can be remote mounted from HMI -optional

The following switches and controls will be mounted inside or on the main cabinet of the unit: Controls mounted w/in HMI remote panel, typically mounted on the unit when pad mounted

Auto/manual switch – enables / disables output voltage regulation Bypass switch
Stop push button – for stopping / resetting the unit
Start push button – for starting the unit

External Interface

The unit will have internally mounted terminal blocks for interfacing external start/stop controls and passenger boarding bridge interlocks. Comply

Cabinet Material:

The cabinet will be constructed from painted anodized aluminum. If Offeror's units provide an alternate cabinet material, it must be noted as an exception in Offeror's proposal. PMGAA will review such exception for compliance and acceptance.

Exception: cabinet is steel

Weather Rating: IP55 (Electronic section)

Comply

Hardware: All mounting hardware will be stainless steel.

Comply

Wiring: All wires or cables will be numbered or labeled.

Comply

Temperature Rating: The unit will operate at a temperature of -40 to +55□ C.

operating range -30C to +50C (-22F to +122F)

Certifications:

Remote Monitoring: A communication module (Modbus or BACnet) to provide data points that can convert to BACnet protocol standards for integration of a building automation system.

Standard communication via Modbus TCP/IP, BACnet can be utilized with installation of BACnet gateway. Gateway can be added at anytime. Addressing information is provided, programming data points and integration to external dashboard "by others", typically Airport IT staff

Ducting: Supply duct will be lay flat constructed with Velcro and zipper connections, 14" diameter and include connection to unit and reducer to 8" inch aircraft coupling. Ducting length to equal 75' total. Aircraft coupling to be included.

Comply

Input Cables: Not required

Hose: Starter coupler on hose required

Comply

Attachment A

Technical Specifications and Explanations Certification

1. By submitting a proposal, Offeror hereby certifies that the Preconditioned Air Units submitted for consideration by PMGAA under this solicitation, 2021-011-RFP, meet all specifications contained in Exhibit 1 to this RFP.

2. Specifications may be exceeded and should be noted by Offeror and submitted to PMGAA as part of Offeror's proposal under Tab C.

3. For further clarification on specifications listed in Exhibit 1, Offeror is directed to the applicable document sources listed in Exhibit 1.

Greg Rentfro

Name

October 8, 2021

Date

Signature

Phoenix-Mesa Gateway Airport

Attachment B

Monitoring System Requirements Certification

Equipment proposed under this RFP must have the ability to monitor the following functions. Offeror hereby certifies that the Equipment proposed meets or does not meet the following monitoring ability.

Meets	Does Not Meet	
☒	☐	**Power consumption** Description: 3400 provides power consumption per use within the standard 'PowerLog' accessible via remote panel (HMI) and/or via USB download record. Power consumption (and other data point) monitoring to a remote dashboard can be done. Integration to customer dashboard is "by others"
☒	☐	**User identification to assign power consumption costs** Description: Ability to identify specific user is available via use of a card reader for access control to the equipment. A card reader IS NOT included in our base bid but can be added at any time to the standard 3400 system.
☒	☐	**Warn or failing parts/diagnostics** Description: 3400 provides fault and error messages within the standard 'BlackBox' accessible via remote panel (HMI) and/or via USB download record. Fault and error message reporting to a remote dashboard can be done. Integration to customer dashboard is "by others".
☒	☐	**Remote monitoring** Description: The 3400 is capable of external communication via MODBUS (TCP/IP). BACnet protocol requires optional gateway be installed. Remote monitoring typically requires some integration of 3400's data point addressing to the customer's specfic monitoring 'dashboard' External communication integration is typically provided by local customer IT personnel. ITW GSE provides addressing/register list for data points in O&M manuals. Please contact us for more specific details.

Greg Rentfro		October 8, 2021
Printed Name	Signature	Date

Tab D

Desert Equipment Presence

October 10, 2021

Solicitation Number: 2022-011-RFP– Pre-Conditioned Air Units

Desert Equipment Presence:

ITW GSE market focus is world-wide, our equipment is designed to perform in all climates from extreme cold to extreme heat and high humidity. The 3400 Series equipment is rated outdoor use, with ingress protection meeting NEMA 3R/IP54 with additional protection of NEMA 4/IP55 for the electronic section.

The design operating temperatures are -30°C to +50°C (-22°F- +122°F). The ITW GSE equipment is in use in every environment. Specific to experience in harsh desert climates, we provide a few examples below where the 3400 Series equipment is in use and has been for a few years:

Customer	Country Location	Project size	Installation
Prince Mohammad Bin Abdulaziz Intl. Airport	Saudi Arabia	(21) PCA210	2013/2014
Doha International Airport	Qatar	(78) PCA130	2011/2012
Riyadh Airport	Saudi Arabia	(24) PCA 210,130	2014
Kuwait Airport	Kuwait	(11) PCA 210	2017
Tabuk Airport	Saudi Arabia	(3) PCA 210	2017
Phoenix-Mesa Gateway	USA	(5) PCA 130	2019/2020

Tab E

Warranty

Phoenix-Mesa Gateway Airport

Attachment C
Warranty

***Offerors may submit additional warranty information but must complete this form as well. Writing "see attached" or to the effect thereof, will not be accepted.**

Standard Warranty Information

Area / Category	Length (months)	Comments
PCA Equipment -- Full Coverage Parts and Labor excludes consumable wear	24	**Note:** Standard PCA warranty is 12 months as shown in provided ITW GSE Terms and Conditions. 24 months coverage is included in our base bid per SOW requirements
PCA Hoses and Accessories	12	Please refer to ITW GSE Terms and Conditions for complete information Due to limits on page quantity please use online resource at: http://itwgse.com/wp-content/uploads/2018/04/itw-gse-inc-terms-and-conditions-of-sale_2015-04-28.pdf
		Warranty Period begins on date of "in service", based on initial start up/ commissioning

Extended Warranty Options

Length (months)	Cost Per Unit
Additional 12 months warranty, 3-years total coverage	$2,756 per unit

It's all about connections

October 10, 2021

Solicitation Number: 2022-011-RFP– Pre-Conditioned Air Units

Warranty Statement

Length of Warranty: The Warranty Period shall start upon acceptance of start-up and date equipment is placed into service at Mesa Gateway Airport.

ITW GSE, Inc. (ITW) warrants that it will convey the Products free and clear of all liens, security interests and encumbrances created by, through or under ITW GSE, Inc. ITW further warrants that for the applicable Warranty Period (defined below), under normal use and given proper installation and maintenance as determined by ITW GSE, the Products: (a) will conform to mutually agreed upon written specifications or other descriptions; and (b) will be free from substantial defects in material and workmanship.

ITW GSE, Inc. Terms and Conditions of Sale provides for 12 months warranty coverage on PCA 3400 equipment. Standard warranty on PCA is 12 months, SOW requires 24 months therefore base bid coverage is 24 months on the PCA 3400 units. Warranty period will begin on date of first beneficial use (typically determined by date of commissioning).

ITW GSE, Inc. has offered within submittal the option of extended warranty coverage beyond the included 2-year warranty. (refer to Attachment C)

Refer to ITW GSE Terms and Conditions of Sales, Americas dated January 20, 2020 for all other terms and conditions.

1. Acceptance. ITW GSE Inc, herein referred to as "ITW" and the customer purchasing products ("Products") or services ("Services") from ITW is referred to as "Purchaser." These terms and conditions of sale ("Terms"), any ITW quotation, acknowledgment or invoice and all documents incorporated by specific reference herein or therein ("ITW Documents" and together with these Terms, the "Agreement"), constitute the complete terms governing the sale of Products and Services. ITW HEREBY REJECTS ANY ADDITIONAL OR DIFFERENT TERMS OR CONDITIONS PROPOSED BY PURCHASER, WHETHER OR NOT CONTAINED IN ANY OF PURCHASER'S BUSINESS FORMS OR IN PURCHASER'S WEBSITE, AND SUCH ADDITIONAL OR DIFFERENT TERMS WILL BE OF NO EFFECT. No site usage agreement or any other click through agreement on a website will have any binding effect whether or not ITW clicks on an "ok," "I accept," or similar acknowledgment. Commencement of any work by ITW or Purchaser's acceptance of delivery of the Products or Services will manifest Purchaser's assent to the Agreement. Additional or different terms applicable to a particular sale may be specified in the body of an ITW Document or agreed to in writing by the parties. In the event of a conflict, the following order of precedence will apply: (a) terms agreed to in writing and executed by an authorized officer of ITW; (b) ITW Document terms;
(c) these Terms.

2. Quotations. Quotations are only valid in writing and for 30 days from the date of the quotation for consumables and spare parts and 60 days from the date of quotation for equipment. All quotations are subject to change or withdrawal without prior notice to Purchaser. ITW may refuse orders and has no obligation to supply Products or Services unless ITW issues an order acknowledgement or upon the shipment of Products or commencement of Services.

3. Prices and Payment Terms. Unless otherwise stated, prices are in U.S. Dollars and are subject to change without notice. All orders are accepted subject to ITW's price in effect at time of shipment. Prices do not include any sales, use, value-added or other taxes, import duties, license fees or like charges ("Fees") related to the sale, importation or use of Products or Services, and Purchaser is responsible for those Fees. If ITW is subsequently required to pay any Fees, Purchaser shall fully defend and indemnify ITW therefor. Terms of payment are 30 days net from the date of ITW's invoice. Overdue invoices will incur interest at the rate of 1.5% per month, or at the maximum rate allowable by governing law. Purchaser's inspection rights herein will not affect the payment terms. Under no circumstances will Purchaser have a right of set-off. All shipments are subject to approval by ITW's credit department. ITW may invoice Purchaser and recover for each shipment as a separate transaction. If Purchaser fails to make any payment as required and when due, without prejudice to any of its other remedies, ITW may defer or decline to make any shipments except upon receipt of satisfactory security or cash payments in advance and/or terminate any or all of Purchaser's purchase orders and Purchaser agrees to indemnify ITW for all associated costs incurred by ITW, including reasonable attorney fees and court costs.

4. Cancellation or Modification. ITW may cancel any purchase order or release thereunder, or terminate any agreement relating to the purchase of ITW's Products or Services upon 60 days' prior written notice to Purchaser. Once ITW has accepted a purchase order or begun taking actions with respect to a purchase order, Purchaser cannot cancel or modify that purchase order except with ITW's written consent. In such event, Purchaser will be liable for cancellation or modification charges and all costs incurred and committed for the order or in connection with the cancellation or modification, as applicable, together with a reasonable allowance for prorated expenses and anticipated profits.

5. Inspection / Non-Conforming Shipments. Purchaser may inspect Products for a period of 15 business days after delivery ("Inspection Period"). Purchaser must notify ITW in writing of any Products that do not conform to the specifications applicable to their sale within the Inspection Period and afford ITW a reasonable opportunity to inspect such Products and cure any nonconformity. If Purchaser fails to provide ITW such written notice within the Inspection Period, Purchaser will be deemed to have accepted the Products. Purchaser may not return any Product without ITW's prior written authorization. Any return authorized by ITW must be made in accordance with ITW's return policies. Purchaser will be responsible for all costs associated with returns of Products and will bear the risk of loss, unless ITW agrees otherwise in writing or determines that the Products do not conform to the applicable terms of sale.

6. Delivery. Products will be shipped in accordance with the Incoterm (2020) specified by ITW. If no Incoterm is specified, Products will be shipped EXW (ExWorks) ITW's facility (Incoterms 2020). Shipping dates are approximate and are based upon prompt receipt of all necessary information from Purchaser. ITW may ship items in a single or multiple shipments. Title to the Products shall pass to Purchaser at the point risk passes under the applicable Incoterm. Purchaser assumes all risk and liability for loss and use or misuse by third parties who acquire or use the Products illicitly after delivery. Purchaser must notify ITW and the delivering carrier immediately after receipt of Products, of any damage or shortage, and afford ITW a reasonable opportunity to inspect the Products. Any loss occasioned by damage or shrinkage in transit will be for Purchaser's account, and claims for such loss must be made solely against the carrier.

7. Warranty. ITW warrants that it will convey the Products free and clear of all liens, security interests and encumbrances created by, through or under ITW. ITW further warrants that for the applicable Warranty Period (defined below), under normal use and given proper installation and maintenance as determined by ITW, the Products: (a) will conform to mutually agreed upon written specifications or other descriptions; and (b) will be free from substantial defects in material and workmanship.

The Warranty Period starts at the date of shipment and continues for the period listed below:

Engine drive GPU (other than engine and generator subassemblies): 24 months.
Engine: 24 months or 2,000 running hours, whichever comes first. Minimum 12 months, regardless of engines running hours.
Engine drive GPU Generator: 24 months.
Line powered GPU equipment: Electrical components 24 months.
Line powered GPU equipment: Mechanical components 24 months.
Line powered PCA equipment:12 months. 24Months from date of beneficial use, reference Warranty Statement Oct 10, 2021
Battery powered GPU equipment: Electrical components 24 months.
Battery powered GPU equipment: Batteries 60 months. Conditions apply, see section 5.0 of the Original User Manual ITW GSE 7400, provided with the machine or available upon request.
Warrantied replacements parts: The remainder of the original warranty period or 6 months, whichever is longer.
Accessories: 6 months.
Spare parts: 6 months.

In the event of a breach of the warranties set forth above (the "Warranties"), ITW's sole liability and Purchaser's sole remedy will be (at ITW's option), for ITW to repair, replace or credit Purchaser's account for, any Product that fails to conform to the Warranties, provided that (i) during the Warranty Period ITW is promptly notified in writing upon discovery of such failure with a detailed explanation of any alleged deficiencies; (ii) ITW is given a reasonable opportunity to investigate all claims; and (iii) ITW's examination of such Product confirms the alleged deficiencies and that the deficiencies were not caused by accident, misuse, neglect, improper installment, unauthorized alteration or repair or improper testing. No Products may be returned to ITW until inspection and approval by ITW.

The Warranty against defects does not apply to: (1) consumable components or ordinary wear items; or (2) use of the Products with equipment, components or parts not specified or supplied by ITW or contemplated under the Product documentation.

EXCEPT AS SET FORTH ABOVE, ITW MAKES NO WARRANTY OR REPRESENTATION OF ANY KIND, EXPRESS OR IMPLIED (INCLUDING NO WARRANTY OF MERCHANTABILITY OR FITNESS FOR ANY PARTICULAR PURPOSE).

8. Limitation of Liability and Remedies. ITW WILL NOT BE LIABLE, AND PURCHASER WAIVES ALL CLAIMS AGAINST ITW, FOR INDIRECT, INCIDENTAL, SPECIAL, PUNITIVE OR CONSEQUENTIAL DAMAGES, DOWN TIME, LOST PROFITS OR COMMERCIAL LOSSES, WHETHER OR NOT BASED UPON ITW'S NEGLIGENCE OR BREACH OF WARRANTY OR STRICT LIABILITY IN TORT OR ANY OTHER CAUSE OF ACTION. IN NO EVENT WILL ITW'S LIABILITY IN CONNECTION WITH THE AGREEMENT OR SALE OF ITW'S PRODUCTS OR SERVICES EXCEED THE PURCHASE PRICE OF THE SPECIFIC PRODUCTS OR SERVICES AS TO WHICH THE CLAIM IS MADE.

9. Product Use. Purchaser is solely responsible for determining if a Product is fit for a particular purpose and suitable for Purchaser's method of application. Accordingly, and due to the nature and manner of use of ITW's Products, ITW is not responsible for the results or consequences of use, misuse or application of its Products. All physical properties, statements and recommendations are either based on the tests or experience that ITW believes to be reliable, but they are not guaranteed.

10. Ownership of Intellectual Property. All drawings, know-how, designs, specifications, inventions, devices, developments, processes, copyrights and other information or intellectual property disclosed or otherwise provided to Purchaser by ITW and all rights therein (collectively, "Intellectual Property") will remain the property of ITW and will be kept confidential by Purchaser in accordance with these Terms. Purchaser has no claim to, nor ownership interest in, any Intellectual Property, and such information, in whatever form and any copies thereof, shall be promptly returned to ITW upon request from ITW. Purchaser acknowledges that no license or rights of any sort are granted to Purchaser hereunder in respect of any Intellectual Property, other than the limited right to use ITW's Products or receive the Services purchased from ITW.

11. Use of Trademarks and Trade Names. Purchaser shall not use, directly or indirectly, in whole or in part, ITW's name, or any other trademark or trade name that is now or may hereafter be owned by ITW (collectively the "Trademarks"), as part of Purchaser's corporate or business name, or in any way in connection with Purchaser's business, except in a manner and to the extent authorized herein or otherwise approved by ITW in writing. Purchaser hereby acknowledges ITW's ownership of the Trademarks and the goodwill associated therewith. Purchaser shall not infringe upon, harm or contest the validity of any Trademarks. Purchaser shall be entitled to use the Trademarks only in connection with the promotion or sale of the Authorized Products pursuant to the terms of the Agreement. Purchaser shall reproduce the Trademarks exactly as specified by ITW. Purchaser shall not use the Trademarks in combination with any other trademarks or names. Purchaser agrees that it will not register or attempt to register any Trademark or any colorable imitation thereof (including any non-English language variation thereof), or use such Trademarks for any products or for any purposes other than those set forth in the Agreement. Purchaser shall not at any time during or after termination of the Agreement use in its business any other trademark that is similar to or in any way resembles the Trademarks so as to be likely to cause deception or confusion with the Trademarks. Purchaser shall provide reasonable cooperation to ITW with respect to any efforts of ITW to protect, defend or enforce its rights to the Trademarks. Should Purchaser cease being an authorized customer of ITW for any reason, Purchaser shall immediately discontinue any formerly permitted use of ITW's name or the Trademarks.

12. Confidential Information. All information furnished or made available by ITW to Purchaser in connection with the subject matter hereof shall be held in confidence by Purchaser. Purchaser agrees not to use (directly or indirectly), or disclose to others, such information without ITW's prior written consent. The obligations in this section will not apply to any information that: (a) at the time of disclosure was or thereafter becomes generally available to the public by publication or otherwise through no breach by Purchaser of any obligation herein; (b) Purchaser can show by written records was in Purchaser's possession prior to disclosure by ITW; or (c) is legally made available to Purchaser by or through a third party having no direct or indirect confidentiality obligation to ITW with respect to such information.

13. Audit. Unless agreed to in writing by an officer of ITW, neither Purchaser nor any Purchaser representative, may examine or audit ITW's cost accounts, books or records of any kind or any matter, or any other data that ITW, in its sole discretion, considers confidential or proprietary.

14. Infringement and Indemnification. Except as set forth below, ITW agrees to defend and indemnify Purchaser against any claims, costs, damages, liability and expenses resulting from actual patent, trademark or copyright infringement, misappropriation of confidential information, or violation of any other Intellectual Property right, domestic or foreign that may arise from the sale of ITW's proprietary Product to Purchaser as such pertains to the subject matter of the Agreement (each, a "Claim"); provided, however, (a) Purchaser supplies ITW written notice of such Claim immediately after the Purchaser has notice of such Claim, (b) Purchaser cooperates with ITW in the defense and settlement of such Claim; and (c) Purchaser allows ITW the right to defend and settle such Claim at ITW's expense If a suit or claim results in any injunction or order that would prevent ITW from supplying any part or Product falling under the Agreement, or if the result of such a suit or claim would, in the reasonable opinion of ITW, otherwise cause ITW to be unable to supply such parts or Products, ITW may do one or more of the following: (i) secure an appropriate license to permit ITW to continue supplying those parts or Products; (ii) modify the appropriate part or Product so that it becomes non-infringing; (iii) replace the appropriate part or Product with a non-infringing but practically equivalent part or Product; or (iv) if ITW cannot reasonably accomplish the actions specified in subsections (i) – (iii), then in ITW's sole discretion, ITW may discontinue selling the part or Product without any further liability to Purchaser. Notwithstanding the foregoing, ITW shall have no liability or duty to defend and indemnify Purchaser against any Claim relating to: (1) the use of any part or Product, (2) the combination of any part or Product with any other part or product not supplied by ITW, or (3) any part or Product or process that is designed or specified by Purchaser.

15. ITW Employees. ITW employees do not have the training or authority to make legal representations or enter into any agreements or execute any Purchaser documents affecting legal responsibilities or waiving legal rights, including those regarding the transfer of intellectual property rights or related to privacy laws. Any such representations, agreements or documents will not be binding on ITW or such ITW employees.

16. Compliance. Purchaser agrees to comply with all federal, state, local and foreign rules, regulations, ordinances and laws applicable to Purchaser's obligations hereunder and Purchaser's use of the Products and Services, including import/export laws, labor laws and anti-corruption laws.

17. Relationship of the Parties. Nothing in the Agreement or the course of dealing of the parties may be construed to constitute the parties hereto as partners, joint venturers or as agents for one another or as authorizing either party to obligate the other in any manner.

18. Force Majeure. ITW will not be responsible for failure to perform in a timely manner under the Agreement when its failure results from events beyond its reasonable control (an event of "Force Majeure"), including acts of God, epidemics, acts of war whether declared or undeclared, blockades, labor disputes (whether of ITW's employees or the employees of others), raw material shortages and material increases in costs of raw materials. In the event of Force Majeure, the time for performance will extend for such time as reasonably necessary to enable ITW to perform.

19. Assignment; Binding Effect. No assignment of any rights or interest or delegation of any obligation of Purchaser under the Agreement or Purchaser's purchase order may be made without ITW's prior written consent. Any attempted assignment will be void. ITW may assign the Agreement or otherwise transfer its rights and/or obligations under the Agreement. The Agreement will inure to the benefit of and be binding upon the parties and their respective permitted successors and assigns.

20. Waiver. In the event of any default by Purchaser, ITW may decline to ship Products or provide Services. If ITW elects to continue shipping or otherwise fails to insist upon strict compliance with the Agreement, ITW's actions will not constitute a waiver of Purchaser's default or any other existing or future default, or affect ITW's legal remedies.

21. Bankruptcy. If either party becomes insolvent, is unable to pay its debts when due, files for or is the subject of involuntary bankruptcy, has a receiver appointed or has its assets assigned, the other party may cancel any unfulfilled obligations hereunder.

22. Limitation of Actions/Choice of Law/Litigation Costs. Any dispute arising out of or related to the Agreement will be governed by and construed according to the laws of the state of Florida and litigated exclusively in a state or federal court located in Florida. The parties hereto expressly release and waive any and all rights to a jury trial and consent to have any dispute heard solely by a court of competent jurisdiction. The parties agree that the United Nations Convention on Contracts for the International Sale of Goods will not apply to the Agreement. If either party commences litigation or mutually agreed upon alternative dispute resolution concerning any provision of the Agreement, the prevailing party is entitled, in addition to the relief granted, to a reasonable sum for their attorney's fees in such litigation or mutually agreed upon alternative dispute resolution, provided that if each party prevails in part, such fees will be allocated in the manner as the court or arbitrator determines to be equitable in view of the relative merits and amounts of the parties' claims.

23. Survival. Any provisions in the Agreement which, by their nature, extend beyond the termination or expiration of any sale of Products or Services, will remain in effect until fulfilled.

24. Severability. If any provision herein is held to be unlawful or unenforceable, the remaining provisions herein will remain in effect.

25. Integration and Modification. The Agreement constitutes the entire agreement between ITW and Purchaser with respect to the Products and Services covered by the Agreement, and supersedes any prior agreements, understandings, representations and quotations with respect thereto. No modification hereof will be of any effect unless in writing and signed by the party to be bound thereby.

Tab F

Parts Availability

Attachment D
Parts Availability and Capability

Offeror to describe their parts availability and capability as it pertains to PMGAA ordering and receiving parts (i.e. domestic availability or foreign availability, parts readily stocked, technical service advisors available, etc.), including turnaround time for order processing and shipping.

Parts Availability:
The quoted 3400PCA is fully supported from our Palmetto, FL facility. Spare parts inventory is maintained and shipped from our production facility in Palmetto. The quoted 3400 equipment is of standard design. It is in daily production utilizing standardized components and drawings. The 3400, like most equipment today, is comprised of both domestic and foreign material; however, the volume of daily production demand insures routine order and on - hand stock of all components are maintained locally in Palmetto. Parts are readily available, typically shipping from Palmetto, FL within 24 hours of order receipt.

Assistance and Ordering:
Orders of spare parts may be placed by phone, fax or email. ITW GSE, Inc. has multiple internal sales and service personnel available to assist your staff with all orders/parts inquiries by phone. The ITW GSE website provides spare parts list, illustrated parts guide and schematics for reference and download. We also provide on - line, a comprehensive list of ITW GSE personnel who are available to assist with PMGAA requests. ITW GSE, Inc. provides customer support (technical) via phone and email to assist your personnel in trouble shooting/repair of equipment.

Additionally, we have factory technicians in the field for on site repairs. Our website provides instructional videos for repair and FAQ's to support your personnel.

ITW GSE is set up to handle your needs efficiently and promptly!

Technical Service:
Training of PMGAA personnel will be conducted by one of ITW GSE's technicians, this opportunity establishes a personal relationship between your personnel and our support staff. The ITW GSE customer service group is highly tenured, each having hands - on experience in both assembly and repair of this equipment; PMGAA personnel will find our technicians patient and adept in resolving any issues that may arise. Our training and online tools enable local personnel to be very proficient in diagnosis and repair. The 3400 diagnostic capabilities enable simple resolution at the local level. In those instances where factory support is needed, most repair issues are solved via phone/web conference.

On site field support is always available when requested/needed.

Key Points for support
Customer Service Phone:866/845-0441
Customer Service email: support@itwgse.us
Website: www.itwgse.com
Recommended Spares: https://itwgse.com/wp-content/uploads/2018/03/572561AB.pdf
Illustrated Parts Guide: https://itwgse.com/wp-content/uploads/2018/03/972011FB.pdf

Tab G

Price Proposal

Phoenix-Mesa Gateway Airport

Attachment E
Price Proposal

Item	Price
Two (2) New Preconditioned Air Units, To Meet Minimum Specifications per Exhibit 1 *(includes: PCA unit and hoses)*	$ 163,174.00
Manuals, 2 sets, to meet requirements per Section Two C.	$ 0.00
Sales Tax, 8.3% *(tax of 8.3% on base equipment only, PCA and hoses)* PMGAA is NOT tax exempt. If Offeror does not collect sales tax on behalf of the State of Arizona when invoicing, Offeror should still include tax at a rate of 7.6% for Use Tax.	$ 13,543.44
Warranty, two (2) new Preconditioned Air Units, to meet requirements per Section Two C.	0.00
Training, to meet requirements per Section Two C.	$ 1,800.00
Shipping, two (2) new Preconditioned Air Units *(one (1) shipment)*	$ 6,100.00
Total	$ 184,617.44

Discounts:
Prompt Payment: The price(s) quoted above can be discounted by 0.0 % if payment is made within _____ days.

Parts: PMGAA price for purchasing parts direct from the Offeror shall be discounted by 20.0 % of the current list price for parts published by Offeror.

Exceptions / Clarifications of Offeror:

For Clarification: ITW GSE standard warranty is 12 months on PCA equipment, 24 month warranty IS provided per SOW. Exceptions are noted in Exhibit I - Cabinet material (steel), Indicators (super heat, subcool measurment and color of 'ready' lamp), Temperature range (-30°C to +50°C)

Delivery Time Estimate of Equipment to PMGAA:

8-12 weeks ARO

Equipment Manufacturer: **ITW GSE, Inc**

Equipment is Manufactured in (Country): **Principle Assembly, Denmark**

Greg Rentfro		October 8, 2021
Printed Name	Signature	Date

Tab H

Ancillary Equipment

Attachment F
Ancillary Equipment

The Offeror may or may not include pricing for any optional equipment and/or accessories available **in addition to those required to meet the Minimum Specifications listed in Exhibit 1.** PMGAA is under no obligation to purchase any or all options listed below.

Description	Cost (Per Unit)
JB680-8U, Hose Reel, 80' capacity for easier handling and storage of PCA hose - Shown on Quote as Add Alternate 2	$1,415.00 Each
972028-B, Remote EPO, EPO removed from primary operator HMI and located to rear of PCA. Function of existing EPO on remote panel is then a normal "off" button allowing normal shutdown sequence of equipment in lieu of emergency shut down (removal of all power) all compoenents - Shown on Quote as Add Alternate 3	$300.00 Each

Tab I

Supplemental

Materials

It's all about connections

October 10, 2021

Re: SOLICITATION 2022-011-RFP – Pre-Conditioned Air Units, Phoenix Mesa Gateway Airport

Supplemental Information

The quoted equipment in ITW GSE proposal is the same equipment previously purchased and installed at Mesa Gateway Airport; configuration and components are unchanged from prior equipment purchases. Reference attached cutsheet for specifications.

Photograph: Pad Mount, PCA 3400 (60 Ton) Gate 4 AZA, Phoenix-Mesa Gateway Airport

ITW GSE

3400 PCA

Pre-conditioned air unit - 130 & 210

20 MIN. SWAP

QUICK SWAP
OF COOLING MODULE

It's all about connections

GO GREEN
on ground

THE SMART CHOICE

ITW GSE is a trustworthy partner designing and optimizing GSE equipment. We have strong expertise within cooling technology and the ITW GSE 3400 PCA is the market's most innovative, reliable and environmentally friendly point-of-use PCA. The 3400 PCA is also the market's only true modular PCA (patented).

The 3400 PCA supplies fresh, clean air into parked aircraft, at carefully monitored temperatures and provides a pleasant atmosphere for the crew and the passengers. It also makes aircraft turn-around faster and more effective.

DESIGNED FOR ALL KINDS OF AIRCRAFT

The 3400 PCA is available for bridge- or ground-mounting for aircraft parking positions or hangar applications. It is designed to suit all types of aircraft from the Narrow-Body (Code C: A320) & Wide-Body (Code D: B767) equipped with 1 PCA connector over the Jumbo (Code E: B777) to the Super Jumbo (Code F: A380) equipped with 4 PCA connectors connected to two ITW GSE 3400 PCA 210 units.

The 3400 PCA uses a minimal amount of refrigerant due to micro channel condenser technology and the compact design of the unit. The refrigerant R410A does not degrade the ozone layer at all. The refrigerant further provides reliable operation at high ambient temperatures. The distance between the evaporators and the low air velocity optimize the efficiency of each cooling circuit and prevent condensation drops from moving from one evaporator to the next.

IMPROVE YOUR ENVIRONMENT AND CUT COST

The increasing focus on environmental issues means that airports aim to let an external pre-conditioned air unit and a 400 Hz solid-state unit take over the functions of the aircraft APU while the aircraft is parked at the gate. We call this the "Go Green on Ground" concept whereby carbon emission is reduced by approx. 80-85%. The concept furthermore provides savings on the costly maintenance to the on-board APU, based on hours of operations. For the airports, the "Go Green on Ground" also means a reduction of the noise level to the benefit of the airport personnel, passengers and to surroundings in general.

PCA 130 - 2 Cooling Modules

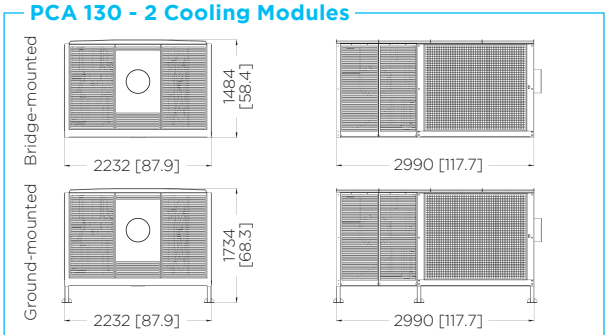

Dimensions are shown in mm and [inches]

PCA 210 - 3 or 4 Cooling Modules

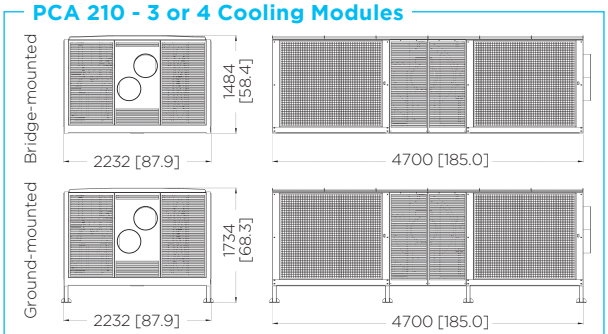

Dimensions are shown in mm and [inches]

INNOVATIVE DESIGN

The ITW GSE 3400 PCA is the market's only modular PCA. It is designed around identical cooling modules that are easy to swap by a technician with no special skills and in 20 minutes only. This helps you keep aircraft turn-arounds on schedule.
The modular design also means big savings on spare part inventories. All parts (e.g. the self-containing cooling modules, condenser fans, main blower etc.) can be replaced without removing the PCA unit from underneath the passenger boarding bridge.

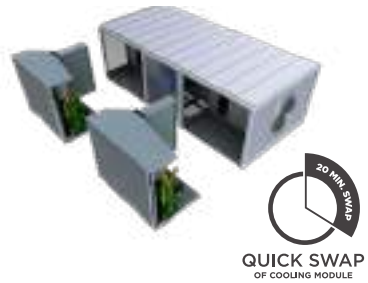

POWER CONSUMPTION

The 3400 PCA enables limiting of the current drawn. In this way, the PCA does not overload the entire mains supply with blown fuses and aircraft delays as possible consequences.
In the event of a later infrastructure upgrade, the current limit can be set to another value allowing the PCA to cool more!
The excellent high power factor of > 0.97, means a line current reduction of up to 20% compared to similar PCA units with the same rating. Also, smaller and less costly cables can be used. Add to this the choice of state-of-the-art components that ensures a high performance at the output as well as a low energy consumption.
Further reductions on the energy consumption are achieved due to the variable frequency drive (VFD) control of all main parts such as compressors and blowers.
Therefore, the life time costs of the ITW GSE 3400 PCA are as low as they can possibly be.

STEPLESS REGULATION

The 3400 design breaks completely new ground by using variable frequency drive technology that gives easy, stepless regulation of the discharge temperature. Therefore, the ITW GSE 3400 PCA units supply exactly the required amount of cold air and not more. They use much less energy than other PCAs that are designed for peak load conditions although these conditions probably only apply for 10-20 days each year. Those PCAs deliver excess capacity for about 80% of the time, wasting lots of expensive energy and creating undesirable emissions. Another advantage of the stepless regulation is less mechanical stress – which boosts reliability and service life and gives you a better return on investment.

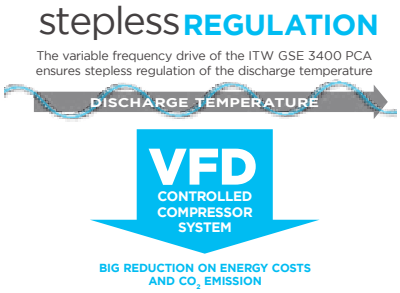

OPTIMUM PERFORMANCE ENSURED

The ITW GSE PCA is, as standard, designed with one stage of ePM10 70% filtre.
The whole internal plenum and stainless steel drain pan can be cleaned in less than 2 hours once the cooling modules have been pulled-out. Afterwards, the evaporators and condensers can be cleaned to optimize the efficiency of the 3400 PCA, which again reduces the whole life costs of the PCA to a minimum.

THE ITW GSE OPERATOR INTERFACE

The ITW GSE operator interface is easy and intuitive. This is your guarantee for correct operation and on-time aircraft departures. The operator only has to press the combined start/stop button. Also, he can monitor various parameters such as temperature and air flow at the display screen.
The operator interface is common from one ITW GSE product to another. Therefore, airport staff familiar with one ITW GSE product can easily switch to another as the icons and display are the same.
For easy set-up and maintenance purposes, there is a deeper level dedicated for the technician. The software-based control system means that your 3400 PCA can be updated and given additional capabilities in the future, simply by transferring new software from a USB stick.

SPECIFICATIONS

ITW GSE 3400 PCA 130 & 210 60 Ton, Part # AP-572516

March 2018: M:10484

Input
- Rectification: 12 pulse
- Line current distortion: < 10%
  Inrush current: None, softstart
- Power factor: >0.97 at 100% load

Output
- Discharge air temperature: Subzero, depending on ambient temperature relative humidity and air flow

Environmental data
- Operating temperature: -30°C to +50°C (-22°F to +122°F)
- Relative humidity: 10-100%, non condensing
- Noise level: < 85 dB(A) at 4.6 m
- IP class: IP54 (Electronic part)

Miscellaneous
- MTTR: Typically 20 minutes
- Refrigerant: R410A
- Construction: Welded, anti-corrosive coated steel frame

Directive conformity
- UL 1995 480 V version, only
- 2004/108/EC EMC Directive
- 2006/95/EC LVD Directive
- 2006/42/EC Machinery Directive

Conformity by complying with
- ETL listing 480 V version, only
- EN61000-6-2 EMC - immunity standard
- EN61000-6-4 EMC - emission standard
- EN62040-1-1 LVD safety standard
- EN61558-2-6 General & safety requirement
- 1915-1&2 Machinery - general safety requirement
- 12312-17 Aircraft ground support equipment, specific requirements

The 3400 PCA is equipped with the following features
- Stepless regulation via VFD on main blower & compressors
- Quick swap of cooling module; only takes 20 minutes
- Internal ducts made of stainless steel
- Smoke detector
- Measure of outlet pressure and air flow
- Air temperature sensors (discharge and inlet)
- 2 pressure and 3 temperature sensors as well as 1 sight glass on each refrigerant circuit
- Micro channel condensers (sea water resistant aluminium)
- "ePM10 70%" filtration including clogging alarm
- Remote control station with display and single communication cable
- Internal 14" damper of the second outlet
- Special condenser coating
- TCP/IP interface via RJ45 port
- Fast evaporator de-icing

Available standard options
- Cabin sensor
- Feet for ground mounted units
- RS485 port with Modbus/Jbus protocol
- ITW GSE Service Tool
- Colour: RAL 7035 (standard) or any other RAL colour on an optional basis
- Heater with overtemp. protection

Model	Marking	Input voltage	Frequency	Current (Line)	Current (MCA)	Current (MOP)	Nominal compressor rating	Airflow	Airflow	Pressure	Pressure	Weight	Weight	Heater (Optional)	Condensate Pumps	Outlets
		[V]	[Hz]	[A]	[A]	[A]	[Tons]	[kg/min]	[lb/min]	[Pa]	[inH$_2$O]	[kg]	[lbs]	[kW]	[Qty]	[Qty]
ADF-130/2 (H)	CE	3 x 400	50	145	180	200	45	130	280	8,500	34	3,200	7,000	72	2	1 x 14"
	UL	3 x 480	50/60	120	146	150	45	130	280	8,500	34	3,200	7,000	72	2	1 x 14"
ADF-130/2X (H)	CE	3 x 400	50	175	200	225	60	130	280	8,500	34	3,200	7,000	72	2	1 x 14"
	UL	3 x 480	50/60	145	170	200	60	130	280	8,500	34	3,200	7,000	72	2	1 x 14"
ADF-210/3 (H)	CE	3 x 400	50	275	300	350	90	210	460	10,000	40	4,000	8,800	120	4	2 x 14"
	UL	3 x 480	50/60	220	250	300	90	210	460	10,000	40	4,000	8,800	120	4	2 x 14"
ADF-210/4 (H)	CE	3 x 400	50	345	370	400	120	210	460	10,000	40	4,500	9,900	120	4	2 x 14"
	UL	3 x 480	50/60	290	310	350	120	210	460	10,000	40	4,500	9,900	120	4	2 x 14"

Tab J

Appendices

Phoenix-Mesa Gateway Airport

Attachment G

Standard Certifications

Complete Attachment G by checking the applicable box(s) and/or providing responses.
Failure to complete this Attachment G in its entirety and submit with Offeror's proposal will result in Offeror's submittal being deemed nonresponsive and not evaluated.

If Offeror cannot affirmatively certify to statement numbers 1 below, Offeror's submittal will be rejected and will not be evaluated.

1. Offeror hereby ☒ certifies ☐ does not certify
That this engagement, if selected, will not result in a conflict of interest.

If Offeror cannot affirmatively certify to statement number 2 below, PMGAA will consider Offeror's written response to determine if it's submittal will be accepted and be evaluated.

2. Offeror hereby ☒ certifies ☐ does not certify
That it has no known business or financial relationships between Offeror or Offeror's firm and members of the PMGAA Board.

If Offeror does have known business or financial relationships, please list them below:

_____

_____

_____

_____

_____

By signature below, Offeror certifies that the information in this Attachment is true, and accurate.

Signature: Greg Rentfro

Date: October 8, 2021

Printed Name: Greg Rentfro

Title: Area Sales Manager

Attachment H

Authorization for Release of Performance Information and Waiver

---

The purpose of this disclosure is to provide references to PMGAA. Offeror hereby consents that as an Offeror to PMGAA's Solicitation 2022-011-RFP, Preconditioned Air Units, for Phoenix-Mesa Gateway Airport, Offeror authorizes those companies and government entities listed in Offeror's RFP submittal and any other government entity for whom this company has provided Preconditioned Air Units to disclose and release to PMGAA, or their representatives, information, records and opinions concerning this company's past performance.

ITW GSE, Inc. (Offeror) hereby waives any claim it may have against PMGAA or any company or entity providing information to PMGAA by reason of any information being disclosed or opinions provided regarding the actions or performance of this company.

This authorization for disclosure of information is effective for one (1) year.

This consent or copy of this authorization shall be as valid and effective as the original.

Signature of Offeror

October 8, 2021

Date

Attachment I
Offer Agreement

OFFER TO PHOENIX-MESA GATEWAY AIRPORT AUTHORITY:

The Offeror hereby certifies and agrees to furnish the Equipment and/or services in compliance with all terms, conditions, specifications, and amendments in the Request for Proposals including Attachment E – Price Proposal.

Company Name: ITW GSE, Inc.

Federal Tax Identification Number: 26-01568318

Sales Tax Identification Number: FL 78-8013977358-8

Signature

October 8, 2021
Date

Greg Rentfro
Printed Name

Area Sales Manager
Title

For clarification of this offer, contact:

Name: Greg Rentfro

Title: Area Sales Manager

Telephone: 469/968-6082

Email: grentfro@itwgse.us

Attachment J
References

Company Name: Norman Y. Mineta San Jose International Airport (SJC) **Contact Person:** Peter Herzog

City, State: San Jose, CA **Telephone:** (408) 392-6720

Model(s) Purchased: 3400 PCA 130/2, PC2400

Date Purchased: 2018, 2019, 2020, 2021

Company Name: United Airlines **Contact Person:** Tim Fox

City, State: Chicago, IL **Telephone:** (847)700-3004

Model(s) Purchased: PCA 3400, PC2400 , 2400, 1400

Date Purchased: 2017, 2018, 2019, 2020, 2021

Company Name: RSW - Lee County Port Authority **Contact Person:** Juan Fonseca, Terminal Maintenance Supervisor

City, State: Fort Meyers, FL **Telephone:** (239) 590-4751

Model(s) Purchased: PCA 3400, 2400

Date Purchased: 2017, 2018

Tab K

Addenda

Acknowledgment

Attachment K
Addenda Acknowledgement

Offeror is responsible for obtaining all addenda, if issued, via the PMGAA website at www.gatewayairport.com under the Business | Procurements, Vendors & Public Notices section or by other means (see Section One, Subsection A, paragraph 2, Addenda).

Failure to acknowledge, and include this form in Offeror's submittal, may cause Offeror's proposal to be deemed nonresponsive. If no addenda were issued, Offeror does not need to include this attachment in its proposal.

Offeror hereby acknowledges receipt of the following addenda issued by PMGAA for solicitation 2022-011-RFP (fill in Addendum Number and Date Issued).

Addendum No. 1 Date Issued: Oct. 4, 2021

Addendum No. _____ Date Issued: _____

Addendum No. _____ Date Issued: _____

Addendum No. _____ Date Issued: _____

Addendum No. _____ Date Issued: _____

By: _____ October 8, 2021
Signature Date

Greg Rentfro Area Sales Manager
Printed Name Title

Phoenix-Mesa Gateway Airport Authority
5835 S Sossaman Road
Mesa, Arizona 85212-6014
www.gatewayairport.com

Board Action Item

Re: Resolution 21-51

To:	**Board of Directors**
From:	**Doug Wirthgen, Information Technology Director**
Through:	**Chuck Odom, CFO**
	J. Brian O'Neill, A.A.E., Executive Director/CEO
Subject:	**CIP 1093 Server Life Cycle Refresh**
Date:	**November 16, 2021**

Proposed Motion
To authorize the procurement of server equipment from Dell Marketing, L.P. (Dell) in an amount not to exceed $72,862.47.

Narrative
The Phoenix-Mesa Gateway Airport Authority's (PMGAA's) Information Technology Service (ITS) ensures the Airport's operation, compliance, and disaster recovery functionality relative to information technology industry standards. FY22 is slated to continue with prior fiscal years practice of desktop computer/server refresh replacement program per a pre-established schedule. The procurement of six (6) servers will complete a five-year refresh life cycle program. Servers are a critical component of the Airport's ability to store and access data across the network. A server plays a vital role in business technology and provides a system solution for backing up operating systems and data in the event of primary system data becoming corrupted, deleted, or lost. As part of the strategic direction of the Airport, increased attention and commitment is being placed on providing essential technology systems and services to ensure cost effective support operations.

As a qualified member of the Arizona Department of Administration State Procurement Office (ADSPO), PMGAA is able to procure goods and services under state contracts that have been competitively bid. The State has currently contracted with Dell for computer hardware and support under contract ADSPO16-098163. It is under this contract that PMGAA will procure the server equipment. This contract is available upon request.

Fiscal Impact
This purchase was included in the FY22 Capital Improvement Projects and is funded under CIP 1093.

Attachment(s)
Dell Technologies Quote

RESOLUTION NO. 21-51

WHEREAS, the Phoenix-Mesa Gateway Airport Authority ("Authority"), a joint powers airport authority formed pursuant to Arizona Revised Statute §28-8521 *et seq.* owns and operates the Phoenix-Mesa Gateway Airport ("Airport"); and

WHEREAS the Authority desires to authorize the procurement of server equipment from Dell Marketing, L.P. (Dell) in an amount not to exceed $72,862.47;

NOW, THEREFORE, BE IT RESOLVED by the Board of Directors of the Authority as follows:

> **The Board of Directors of the Authority hereby authorizes the procurement of server equipment from Dell Marketing, L.P. (Dell) in an amount not to exceed $72,862.47. This resolution also authorizes the Chair or Executive Director/CEO to make such additions, deletions, and changes as may be approved by the Chair or Executive Director/CEO, necessary to carry out the purposes and intent of this Resolution.**

Passed and adopted by the Authority this 16th day of November, 2021.

_____
John Giles, Chair

ATTEST:

_____
Misty Johnson, Clerk of the Board

APPROVED AS TO FORM:

_____
Jill Casson Owen, Attorney

A quote for your consideration

Based on your business needs, we put the following quote together to help with your purchase decision. Below is a detailed summary of the quote we've created to help you with your purchase decision.

To proceed with this quote, you may respond to this email, order online through your **Premier page**, or, if you do not have Premier, use this **Quote to Order**.

Quote No.	**3000103520624.1**	Sales Rep	Dana Harris
Total	**$72,862.47**	Phone	(800) 456-3355, 6180478
Customer #	22980627	Email	Dana_Harris@Dell.com
Quoted On	Oct. 26, 2021	**Billing To**	PAYABLE ACCOUNTS PHOENIX-MESA GATEWAY AIRPORT 5835 S SOSSAMAN RD MESA, AZ 85212-6014
Expires by	Nov. 25, 2021		
Contract Name	Dell NASPO Computer Equipment PA - State of AZ		
Contract Code	C000000010731		
Customer Agreement #	MNWNC-108/ADSPO16-098163		
Solution ID	15125571		

Message from your Sales Rep

Please contact your Dell sales representative if you have any questions or when you're ready to place an order. Thank you for shopping with Dell!

Regards,
Dana Harris

Shipping Group

Shipping To

BRIAN WALLACE
PHOENIX-MESA GATEWAY AIRPORT
5835 S SOSSAMAN RD
MESA, AZ 85212
(480) 988-7600

Shipping Method

Standard Delivery

Product	Unit Price	Quantity	Subtotal
PowerEdge R750 - [amer_r750_14794]	**$12,439.04**	**2**	**$24,878.08**
PowerEdge R650 - [amer_r650_14796]	**$10,709.49**	**4**	**$42,837.96**

Dell Marketing LP. U.S. only. Dell Marketing LP. is located at One Dell Way, Mail Stop 8129, Round Rock, TX 78682

Subtotal:	**$67,716.04**
Shipping:	**$0.00**
Environmental Fee:	**$0.00**
Non-Taxable Amount:	**$0.00**
Taxable Amount:	**$67,716.04**
Estimated Tax:	**$5,146.43**
Total:	**$72,862.47**

Dell Marketing LP. U.S. only. Dell Marketing LP. is located at One Dell Way, Mail Stop 8129, Round Rock, TX 78682

Shipping Group Details

Shipping To

BRIAN WALLACE
PHOENIX-MESA GATEWAY AIRPORT
5835 S SOSSAMAN RD
MESA, AZ 85212
(480) 988-7600

Shipping Method

Standard Delivery

		Quantity	Subtotal
PowerEdge R750 - [amer_r750_14794] Estimated delivery if purchased today: Jan. 14, 2022 Contract # C000000010731 Customer Agreement # MNWNC-108/ADSPO16-098163	**$12,439.04**	**2**	**$24,878.08**

Description	SKU	Unit Price	Quantity	Subtotal
PowerEdge R750 Server	210-AYCG	-	2	-
2.5 Chassis	379-BDTF	-	2	-
SAS/SATA Backplane	379-BDSS	-	2	-
No Rear Storage	379-BDTE	-	2	-
No GPU Enablement	379-BDSR	-	2	-
Trusted Platform Module 2.0 V3	461-AAIG	-	2	-
2.5" Chassis with up to 16 SAS/SATA Drives	321-BGEZ	-	2	-
Intel Xeon Gold 5317 3G, 12C/24T, 11.2GT/s, 18M Cache, Turbo, HT (150W) DDR4-2933	338-CBWN	-	2	-
Intel Xeon Gold 5317 3G, 12C/24T, 11.2GT/s, 18M Cache, Turbo, HT (150W) DDR4-2933	338-CBWN	-	2	-
Additional Processor Selected	379-BDCO	-	2	-
Heatsink for 2 CPU configuration (CPU less than 165W)	412-AAWE	-	2	-
Performance Optimized	370-AAIP	-	2	-
3200MT/s RDIMMs	370-AEVR	-	2	-
Unconfigured RAID	780-BCDS	-	2	-
PERC H755 SAS Front	405-AAZB	-	2	-
Front PERC Mechanical Parts, rear load	750-ACFQ	-	2	-
Performance BIOS Settings	384-BBBL	-	2	-
UEFI BIOS Boot Mode with GPT Partition	800-BBDM	-	2	-
Standard Fan x6	750-ADGK	-	2	-
Dual, Hot-Plug, Power Supply 2400W Redundant, D Mixed Mode	450-AJEV	-	2	-
Riser Config 0, 4x8 slots	330-BBRU	-	2	-
R750 Motherboard	329-BFGT	-	2	-
iDRAC9, Enterprise 15G	385-BBQV	-	2	-
Broadcom 5720 Quad Port 1GbE BASE-T Adapter, OCP NIC 3.0	540-BCOB	-	2	-
PowerEdge 2U Standard Bezel	325-BCHU	-	2	-
Dell EMC Luggage Tag	350-BCED	-	2	-
BOSS-S2 controller card + with 2 M.2 480GB (RAID 1)	403-BCMB	-	2	-

Dell Marketing LP. U.S. only. Dell Marketing LP. is located at One Dell Way, Mail Stop 8129, Round Rock, TX 78682

BOSS Cables and Bracket for R750 (Riser 1)	470-AERR	-	2	-
No Quick Sync	350-BBYX	-	2	-
iDRAC,Factory Generated Password	379-BCSF	-	2	-
iDRAC Group Manager, Disabled	379-BCQY	-	2	-
Windows Server 2019 Standard,16CORE,FI,No Med, No CAL, Multi Language	634-BSFE	-	2	-
Windows Server 2019 Standard,16CORE,Digitally Fulfilled Recovery Image, Multi Language	528-CFIB	-	2	-
ReadyRails Sliding Rails	770-BBBQ	-	2	-
No Systems Documentation, No OpenManage DVD Kit	631-AACK	-	2	-
PowerEdge R750 Shipping	340-CULS	-	2	-
PowerEdge R750 Shipping Material	481-BBFG	-	2	-
PowerEdge Non BIS Marking	389-DYHB	-	2	-
PE R750 No CCC or CE Marking	389-DYHD	-	2	-
US Order	332-1286	-	2	-
Custom Configuration	817-BBBB	-	2	-
Dell Hardware Limited Warranty Plus Onsite Service	852-7274	-	2	-
ProSupport Next Business Day Onsite Service After Problem Diagnosis 5 Years	852-7288	-	2	-
ProSupport 7x24 Technical Support and Assistance 5 Years	852-7308	-	2	-
Thank you choosing Dell ProSupport. For tech support, visit //www.dell.com/support or call 1-800- 945-3355	989-3439	-	2	-
On-Site Installation Declined	900-9997	-	2	-
16GB RDIMM, 3200MT/s, Dual Rank	370-AEVQ	-	4	-
2.4TB 10K RPM SAS 12Gbps 512e 2.5in Hot-plug Hard Drive	400-AVEZ	-	32	-
PowerCord, 250V, 2FT, C19/C20, US	450-AEIT	-	4	-
Windows Server® 2019 Standard Edition, Add License,16CORE,NO MEDIA/KEY	634-BSGE	-	2	-

		Quantity	Subtotal
PowerEdge R650 - [amer_r650_14796] Estimated delivery if purchased today: Jan. 14, 2022 Contract # C000000010731 Customer Agreement # MNWNC-108/ADSPO16-098163	**$10,709.49**	**4**	**$42,837.96**

Description	SKU	Unit Price	Quantity	Subtotal
PowerEdge R650 Server	210-AYJZ	-	4	-
10x2.5 Front Storage	379-BEID	-	4	-
SAS/SATA Backplane	379-BDSS	-	4	-
No Rear Storage	379-BDTE	-	4	-
Trusted Platform Module 2.0 V3	461-AAIG	-	4	-
2.5" Chassis with up to 10 Hard Drives (SAS/SATA), 3 PCIe Slots, 2 CPU	321-BGHN	-	4	-
Intel Xeon Gold 6326 2.9G, 16C/32T, 11.2GT/s, 24M Cache, Turbo, HT (185W) DDR4-3200	338-CBXJ	-	4	-
Intel Xeon Gold 6326 2.9G, 16C/32T, 11.2GT/s, 24M Cache, Turbo, HT (185W) DDR4-3200	338-CBXJ	-	4	-
Additional Processor Selected	379-BDCO	-	4	-

Heatsink for 2 CPU configuration (CPU more than 165W)	412-AAVM	-	4	-
Performance Optimized	370-AAIP	-	4	-
3200MT/s RDIMMs	370-AEVR	-	4	-
RAID 1	780-BCDN	-	4	-
PERC H755 SAS Front	405-AAZB	-	4	-
Front PERC Mechanical Parts, rear load	750-ACFQ	-	4	-
Performance BIOS Settings	384-BBBL	-	4	-
UEFI BIOS Boot Mode with GPT Partition	800-BBDM	-	4	-
4 High Performance Fans for 2 CPU	750-ADIH	-	4	-
Dual, Hot-plug, Redundant Power Supply (1+1), 1400W, Mixed Mode	450-AIQZ	-	4	-
Riser Config 0, 2CPU, Half Length, Low Profile, 3 x16 Slots, SW GPU Capable	330-BBRP	-	4	-
PowerEdge R650 Motherboard	329-BFGW	-	4	-
iDRAC9, Enterprise 15G	385-BBQV	-	4	-
Broadcom 5720 Quad Port 1GbE BASE-T Adapter, OCP NIC 3.0	540-BCOB	-	4	-
Standard Bezel	325-BCHH	-	4	-
Luggage Tray x8 and x10 Chassis, R650	350-BCEI	-	4	-
BOSS-S2 controller card + with 2 M.2 480GB (RAID 1)	403-BCMB	-	4	-
BOSS Cables and Bracket for R650	403-BCNP	-	4	-
No Quick Sync	350-BBXM	-	4	-
iDRAC,Factory Generated Password	379-BCSF	-	4	-
iDRAC Group Manager, Disabled	379-BCQY	-	4	-
No Operating System	611-BBBF	-	4	-
No Media Required	605-BBFN	-	4	-
Cable Management Arm	770-BDMT	-	4	-
ReadyRails Sliding Rails Without Cable Management Arm or Strain Relief Bar	770-BECD	-	4	-
No Systems Documentation, No OpenManage DVD Kit	631-AACK	-	4	-
PowerEdge R650 Shipping	340-CUQR	-	4	-
R650 Ship 4x3.5, 10x2.5, 8x2.5 NVMe	340-CUQN	-	4	-
PowerEdge Non BIS Marking	389-DYHB	-	4	-
PowerEdge R650 No CCC Marking, No CE Marking	389-DYIC	-	4	-
US Order	332-1286	-	4	-
Custom Configuration	817-BBBB	-	4	-
Dell Hardware Limited Warranty Plus Onsite Service	853-2137	-	4	-
ProSupport Next Business Day Onsite Service After Problem Diagnosis 5 Years	853-2151	-	4	-
ProSupport 7x24 Technical Support and Assistance 5 Years	853-2171	-	4	-
Thank you choosing Dell ProSupport. For tech support, visit //www.dell.com/support or call 1-800- 945-3355	989-3439	-	4	-
On-Site Installation Declined	900-9997	-	4	-
16GB RDIMM, 3200MT/s, Dual Rank	370-AEVQ	-	64	-
480GB SSD SATA Read Intensive 6Gbps 512 2.5in Hot-plug AG Drive, 1 DWPD	400-AXTV	-	8	-

C13 to C14, PDU Style, 12 AMP, 6.5 Feet (2m) Power Cord, North America	492-BBDI	-	8	-
Broadcom 5719 Quad Port 1GbE BASE-T Adapter, PCIe Low Profile	540-BBDF	-	4	-

Subtotal:	**$67,716.04**
Shipping:	**$0.00**
Environmental Fee:	**$0.00**
Estimated Tax:	**$5,146.43**
Total:	**$72,862.47**

Dell Marketing LP. U.S. only. Dell Marketing LP. is located at One Dell Way, Mail Stop 8129, Round Rock, TX 78682

Important Notes

Terms of Sale

This Quote will, if Customer issues a purchase order for the quoted items that is accepted by Supplier, constitute a contract between the entity issuing this Quote ("Supplier") and the entity to whom this Quote was issued ("Customer"). Unless otherwise stated herein, pricing is valid for thirty days from the date of this Quote. All product, pricing and other information is based on the latest information available and is subject to change. Supplier reserves the right to cancel this Quote and Customer purchase orders arising from pricing errors. Taxes and/or freight charges listed on this Quote are only estimates. The final amounts shall be stated on the relevant invoice. Additional freight charges will be applied if Customer requests expedited shipping. Please indicate any tax exemption status on your purchase order and send your tax exemption certificate to Tax_Department@dell.com or ARSalesTax@emc.com, as applicable.

Governing Terms: This Quote is subject to: (a) a separate written agreement between Customer or Customer's affiliate and Supplier or a Supplier´s affiliate to the extent that it expressly applies to the products and/or services in this Quote or, to the extent there is no such agreement, to the applicable set of Dell's Terms of Sale (available at www.dell.com/terms or www.dell.com/oemterms), or for cloud/as-a-Service offerings, the applicable cloud terms of service (identified on the Offer Specific Terms referenced below); and (b) the terms referenced herein (collectively, the "Governing Terms"). Different Governing Terms may apply to different products and services on this Quote. The Governing Terms apply to the exclusion of all terms and conditions incorporated in or referred to in any documentation submitted by Customer to Supplier.

Supplier Software Licenses and Services Descriptions: Customer's use of any Supplier software is subject to the license terms accompanying the software, or in the absence of accompanying terms, the applicable terms posted on www.Dell.com/eula. Descriptions and terms for Supplier-branded standard services are stated at www.dell.com/servicecontracts/global or for certain infrastructure products at www.dellemc.com/en-us/customer-services/product-warranty-and-service-descriptions.htm.

Offer-Specific, Third Party and Program Specific Terms: Customer's use of third-party software is subject to the license terms that accompany the software. Certain Supplier-branded and third-party products and services listed on this Quote are subject to additional, specific terms stated on www.dell.com/offeringspecificterms ("Offer Specific Terms").

In case of Resale only: Should Customer procure any products or services for resale, whether on standalone basis or as part of a solution, Customer shall include the applicable software license terms, services terms, and/or offer-specific terms in a written agreement with the end-user and provide written evidence of doing so upon receipt of request from Supplier.

In case of Financing only: If Customer intends to enter into a financing arrangement ("Financing Agreement") for the products and/or services on this Quote with Dell Financial Services LLC or other funding source pre-approved by Supplier ("FS"), Customer may issue its purchase order to Supplier or to FS. If issued to FS, Supplier will fulfill and invoice FS upon confirmation that: (a) FS intends to enter into a Financing Agreement with Customer for this order; and (b) FS agrees to procure these items from Supplier. Notwithstanding the Financing Agreement, Customer's use (and Customer's resale of and the end-user's use) of these items in the order is subject to the applicable governing agreement between Customer and Supplier, except that title shall transfer from Supplier to FS instead of to Customer. If FS notifies Supplier after shipment that Customer is no longer pursuing a Financing Agreement for these items, or if Customer fails to enter into such Financing Agreement within 120 days after shipment by Supplier, Customer shall promptly pay the Supplier invoice amounts directly to Supplier.

Customer represents that this transaction does not involve: (a) use of U.S. Government funds; (b) use by or resale to the U.S. Government; or (c) maintenance and support of the product(s) listed in this document within classified spaces. Customer further represents that this transaction does not require Supplier's compliance with any statute, regulation or information technology standard applicable to a U.S. Government procurement.

For certain products shipped to end users in California, a State Environmental Fee will be applied to Customer's invoice. Supplier encourages customers to dispose of electronic equipment properly.

Electronically linked terms and descriptions are available in hard copy upon request.

^Dell Business Credit (DBC):
OFFER VARIES BY CREDITWORTHINESS AS DETERMINED BY LENDER. Offered by WebBank to Small and Medium Business customers with approved credit. Taxes, shipping and other charges are extra and vary. Minimum monthly payments are the greater of $15 or 3% of account balance. Dell Business Credit is not offered to government or public entities, or business entities located and organized outside of the United States.

Phoenix-Mesa Gateway Airport Authority
5835 S Sossaman Road
Mesa, Arizona 85212-6014
www.gatewayairport.com

Board Action Item

Re: Resolution 21-52

To:	**Board of Directors**
From:	**R. J. Draper, P.E., LEED AP, CM Engineering & Facilities Director**
Through:	**Scott Brownlee, Deputy Director/COO**
	J. Brian O'Neill, A.A.E., Executive Director/CEO
Subject:	**Rental Car Care Facility Design Services – TranSystems Corporation – CIP 1222**
Date:	**November 16, 2021**

Proposed Motion

To approve a Professional Services Agreement with TranSystems Corporation for Design Services for the Rental Car Care Facility Improvements, in an amount not to exceed $390,532 under CIP 1222 and to approve an increase to the FY22 Capital Budget by this same amount funded through Customer Facility Charges (CFC).

Narrative

The growth of commercial service at the Airport benefits the car rental companies and generates revenue for the Airport through Customer Facility Charges (CFC). CFCs are daily transaction fees imposed upon a customer renting a vehicle from an on-airport car rental company. CFC revenues are used to pay for costs associated with the design and construction of facilities or improvements used for the car rental companies located at the Airport.

Our current Car Care Facility is outdated, inadequate, and lacks the capacity and efficiency needed to service our customers effectively. This facility needs to be upgraded and expanded in order to accommodate the increased number of rental cars currently in service. TranSystems Corporation will provide design construction drawings and specifications with probable construction costs, final bid documents and bid phase services. These services will include removal of existing facilities, new car care building, car wash and light maintenance facilities, office and restroom space, car queuing, future fueling signage, asphalt, pavement markings and lighting.

A Request for Qualifications (RFQ), Solicitation 2022-006-RFQ was issued on July 29, 2021 and advertised in the Arizona Business Gazette on 8/5, 8/12, 8/19 and 8/26; the Notice of RFQ was also posted on the AzAA, ACC, ACI-NA, and SWAAAE Websites as well as the Phoenix-Mesa Gateway Airport Authority Website. In addition, the RFQ was emailed to a list of 58 prospective firms. Staff received five (5) Statements of Qualifications on September 2, 2021. Three firms were interviewed, and the Evaluation Panel ranked TranSystems Corporation as the firm that best satisfies the requirements for this project.

Fiscal Impact

We request permission to add $390,532 to the FY22 capital budget. These Design Services will be funded with CFC funds under CIP 1222.

Attachment(s): Professional Services Agreement

RESOLUTION NO. 21-52

WHEREAS, the Phoenix-Mesa Gateway Airport Authority ("Authority"), a joint powers airport authority formed pursuant to Arizona Revised Statute §28-8521 *et seq.* owns and operates the Phoenix-Mesa Gateway Airport ("Airport"); and

WHEREAS the Authority desires to approve a Professional Services Agreement with TranSystems Corporation for Design Services for the Rental Car Care Facility Improvements, in an amount not to exceed $390,532 under CIP 1222 and to approve an increase to the FY22 Capital Budget by this same amount funded through Customer Facility Charges (CFC);

NOW, THEREFORE, BE IT RESOLVED by the Board of Directors of the Authority as follows:

> **The Board of Directors of the Authority hereby approves a Professional Services Agreement with TranSystems Corporation for Design Services for the Rental Car Care Facility Improvements, in an amount not to exceed $390,532 under CIP 1222 and to approve an increase to the FY22 Capital Budget by this same amount funded through Customer Facility Charges (CFC). This resolution also authorizes the Chair or Executive Director/CEO to make such additions, deletions, and changes as may be approved by the Chair or Executive Director/CEO, necessary to carry out the purposes and intent of this Resolution.**
>
> Passed and adopted by the Authority this 16th day of November, 2021.

John Giles, Chair

ATTEST:

Misty Johnson, Clerk of the Board

APPROVED AS TO FORM:

Jill Casson Owen, Attorney

PHOENIX-MESA GATEWAY AIRPORT AUTHORITY

AND

TranSystems Corporation

FOR

RENTAL CAR CARE FACILITY DESIGN SERVICES

CONTRACT NUMBER 20220105

CIP NUMBER 1222

The Phoenix-Mesa Gateway Airport is owned and operated by the Phoenix-Mesa Gateway Airport Authority (PMGAA), a joint powers airport authority authorized by the State of Arizona and consisting of the City of Mesa, City of Phoenix, City of Apache Junction, Town of Gilbert, Town of Queen Creek and the Gila River Indian Community.

Table of Contents

Section I - Consultant Services	3
Section II - PMGAA Responsibilities	3
Section III - Period of Service	3
Section IV – Key Personnel	4
Section V – Payments to the Consultant	4
Section VI – Alteration in Scope of Services	4
Section VII – Work Assignment Completion	4
Section VIII – Ownership of Documents	4
Section IX – Compliance with Laws	5
Section X – General Considerations	5
Section XI – No Kick-back Certification	5
Section XII – Suspension of Services	5
Section XIII – Times of Payments	5
Section XIV – Timely Review	5
Section XV – Dispute Resolution	5
Section XVI – Liability of Consultant	6
Section XVII – Laws and Regulations	6
Section XVIII – Archaeological Resource Protection	6
Section XIX – Insurance Requirements	6
Section XX – Notices	7
EXHIBIT A – Scope of Services & Fee Schedule	9
EXHIBIT B – Compensation	25
EXHIBIT C – Special Provisions	26
EXHIBIT D – PMGAA Standard Terms and Conditions	30
EXHIBIT E – Consultant's RFQ Submittal	35

Phoenix-Mesa Gateway Airport Authority, a joint powers airport authority authorized by the State of Arizona ("PMGAA") desires performance of the services more fully described in this **Contract Number C-20220105** ("Contract") and the attached exhibits. TranSystems Corporation, a Missouri C-Corporation ("Consultant"), with its principal offices located at 2400 Pershing Road, Suite 400, Kansas City, MO, 64108, desires to perform these services.

Recitals

A. PMGAA requires the services as described in this Contract, including any and all exhibits and amendments, and Consultant is willing to provide these and other services under this Contract; and

B. PMGAA desires to contract with Consultant to provide services as noted herein.

Now therefore, in consideration of the recitals and the mutual covenants set forth below, PMGAA and Consultant agree as follows.

SECTION I – CONSULTANT SERVICES

The services to be performed by Consultant are specified in this Contract. PMGAA will not pay Consultant for any services that have not been authorized under the Contract. There is no guarantee of a minimum purchase of services.

The anticipated services to be provided by Consultant under this Contract shall generally include, but not be limited to, the following: Design Services for a Rental Car Care Facility, as more specifically described in the detailed scope of services attached as **EXHIBIT A**, "Scope of Services & Fee Schedule."

PMGAA's authorized representative shall be the PMGAA Engineering and Facilities Director, or his/her duly authorized representative, and that he/she shall be the sole contact for administering this Contract.

All services provided by Consultant under this Contract must be performed in a manner consistent with that degree of care and skill ordinarily exercised by members of the same profession currently practicing under similar circumstances in Arizona. Consultant makes no other warranty, expressed or implied.

SECTION II – PMGAA RESPONSIBILITIES

PMGAA shall furnish Consultant, at no cost to Consultant, the following information or services for this Contract:

A. Access to copies of readily available maps, records, as-built drawings, benchmarks or other data pertinent to work assignments affiliated with this Contract. This does not, however, relieve Consultant of the responsibility of searching records for additional information, for requesting specific information or for verification of that information provided. PMGAA does not warrant the accuracy or comprehensiveness of any information or documents provided to Consultant.

B. In PMGAA's discretion and upon Consultant's reasonable request, access to staff for consultation with Consultant during the performance of this contract in order to identify the problems, needs, and other functional aspects of the work.

C. Prompt review of and feedback on Consultant's deliverables. PMGAA will advise Consultant concerning progress of PMGAA's review of the work, as needed.

SECTION III - PERIOD OF SERVICE

Consultant shall complete all work in accordance with the provisions of this Contract as amended.

All work initiated under this Contract must be completed on or before the expiration date of the Contract as amended.

The term of this Contract shall commence on November 16, 2021 and ends upon final completion and acceptance by PMGAA of the project, as defined by the Scope of Services ("Base Term"), unless terminated, canceled or extended as provided in this Contract.

Consultant shall commence its services within seven (7) days of the written authorization by PMGAA. Consultant shall perform its services in a diligent manner and in accordance with this Contract.

SECTION IV – KEY PERSONNEL

The Consultant and its subconsultants, as listed below, shall provide all services to be performed under this Contract.

Subconsultants:

Dibble Corporation
Speedie & Associates

If additional sub-Consultants are required by Consultant to perform any services listed under this contract, Consultant shall notify PMGAA prior to authorizing work by said sub-Consultants. PMGAA may, at its sole discretion, accept or reject proposed Sub-Consultants.

SECTION V - PAYMENTS TO THE CONSULTANT

Consultant will be paid for work performed under this Contract plus any adjustments that have been approved in writing by PMGAA in accordance with PMGAA's Procurement Policy. Payments will be made in accordance with **EXHIBIT B**, "Compensation."

All services to be rendered by Consultant are subject to the terms of **EXHIBIT B**, "Compensation" attached hereto.

PMGAA does not guarantee any minimum or maximum fee during the Term of this Contract, and Consultant, in executing this Contract, shall not anticipate or require any minimum or maximum fee.

PMGAA shall pay Consultant in agreed upon installments for services authorized and rendered under this Contract at the completion of each work assignment, provided Consultant has satisfactorily completed the requested work. If any such work requires time in excess of 30 calendar days to complete, progress payment(s) may be made on invoices certified and approved by PMGAA.

SECTION VI - ALTERATION IN SCOPE OF SERVICES

For any alteration in the Scope of Services that would materially increase or decrease the Contract fee, the parties shall negotiate an amendment to the Contract to be executed by PMGAA and Consultant. No work shall commence on any amendment or change until the amendment has been approved by PMGAA and Consultant has been notified to proceed by PMGAA. No claim for extra work done or materials furnished by Consultant will be allowed by PMGAA, except as provided herein, nor shall Consultant do any work or furnish any materials not covered by this Contract unless the work is first authorized in writing by PMGAA and the change complies with PMGAA's Procurement Policy. Any work or materials furnished by Consultant without advance, written authorization will be at Consultant's own risk, cost, and expense. Without written authorization, Consultant shall make no claim for compensation for such work or materials furnished.

SECTION VII - WORK ASSIGNMENT COMPLETION

If, during the Term of this Contract, situations arise which prevent work completion within the allotted time, PMGAA may grant an appropriate time extension.

SECTION VIII - OWNERSHIP OF DOCUMENTS

Any documents, including all electronic copies thereof, prepared under or as a result of this Contract, shall be the property of PMGAA. To the extent necessary to effectuate such ownership, Consultant hereby assigns all right, title and interests to such documents to PMGAA. Consultant shall execute any separate contracts or documents, if any, which may be necessary to implement the terms of this Section.

All of Consultant's documents prepared under this Contract, including electronic files, are instruments of service. All of these documents become the property of PMGAA upon completion of the services and payment in full to Consultant. PMGAA may reuse or modify the documents, as it deems necessary, without Consultant's prior written authorization. PMGAA shall indemnify and hold harmless Consultant, its officers, directors, employees and subconsultants (collectively, the "Consultant") against any and all damages, liabilities or costs arising from PMGAA's modification of documents produced by Consultant under this Contract unless Consultant authorizes the modification in writing.

SECTION IX - COMPLIANCE WITH LAWS

Consultant shall comply with all federal, state and local laws, local ordinances and regulations throughout the Term.

Consultant's signature on this Contract certifies compliance with the provisions of the I-9 requirements of the *Immigration Reform and Control Act of 1986* for all personnel that Consultant and any subconsultants employ to complete any work assignment.

PMGAA shall administer this Contract in accordance with PMGAA's Procurement Policy.

SECTION X - GENERAL CONSIDERATIONS

A. The failure of either party to enforce any of the provisions of this Contract or require performance of the other party of any of the provisions hereof shall not be construed to be a waiver of the provisions, nor shall it affect the validity of this Contract or the right of either party to enforce each and every provision.

B. The fact that PMGAA has accepted or approved Consultant's work shall in no way relieve Consultant of responsibility for the work under this Contract.

C. This Contract shall be governed by the laws of the state of Arizona, both as to interpretation and performance. Any action at law, suit in equity, or judicial proceeding for the enforcement of this Contract, or any provision thereof, shall be instituted only in the courts of the state of Arizona.

D. All exhibits to this Contract and any amendments to the Contract are incorporated into it.

SECTION XI - NO KICK-BACK CERTIFICATION

Consultant warrants that no person has been employed or retained to solicit or secure this Contract upon any agreement or understanding for a commission, percentage, brokerage, or contingent fee and that no member of the PMGAA Board of Directors or any employee of PMGAA has any interest, financially or otherwise, in Consultant's firm.

For breach or violation of this warranty, PMGAA may annul this Contract without liability.

SECTION XII – SUSPENSION OF SERVICES

Consultant shall, within five (5) business days upon receiving written notice from PMGAA, suspend, delay, or interrupt all or a part of the Scope of Services. Consultant shall resume the Scope of Services within five (5) business days of receiving written notice from PMGAA.

SECTION XIII – TIMES OF PAYMENTS

Consultant shall submit monthly invoices for services actually completed. PMGAA shall review, certify, and approve or reject each invoice in whole or in part. PMGAA shall pay each approved invoice within 30 calendar days of the date that PMGAA approves the invoice.

SECTION XIV – TIMELY REVIEW

PMGAA will review Consultant's studies, reports, proposals, and other related documents and render any decisions required by Consultant in a timely manner. Notwithstanding these reviews, Consultant remains solely responsible for all of its deliverables and services under this Contract. By PMGAA's reviews, PMGAA does not assume any liability for or retained control over Consultant's work or Consultant's responsibility for the safety of its employees.

SECTION XV – DISPUTE RESOLUTION

All disputes between PMGAA and Consultant arising out of or relating to this Contract will be subject to the Dispute Resolution provisions as set forth in **EXHIBIT D**, "PMGAA Standard Terms and Conditions", attached hereto and incorporated herein by reference.

PMGAA and Consultant shall include a similar dispute resolution provision in all contracts with other contractors and consultants retained for the Project and shall require all other independent contractors and consultants to include a similar dispute resolution provision in all contracts with subcontractors, subconsultants, suppliers or fabricators retained by them.

SECTION XVI - LIABILITY OF CONSULTANT

To the fullest extent permitted by law, Consultant shall defend, save, indemnify, and hold harmless PMGAA, its member governments, departments, officers, employees, and agents from and against damages arising out of any act, error, or omission of Consultant relating to its services under this Contract.

SECTION XVII - LAWS AND REGULATIONS

All federal, state, and local laws and regulations that relate to Consultant's services apply to Consultant's performance of this Contract throughout. These laws and regulations are deemed included in this Contract the same as though written out in full, especially the current applicable Federal Aviation Administration (FAA) rules and regulations associated with airport projects; pertinent Airport engineering standards; and local rules, regulations, and industry standards.

SECTION XVIII – ARCHAEOLOGICAL RESOURCE PROTECTION

While performing services under this Contract, Consultant may encounter a known or unknown archaeological site located at the Airport. If Consultant encounters what it believes to be an archaeological site, Consultant shall immediately notify PMGAA of the site's location and take all reasonable precautions to protect and preserve the site until PMGAA otherwise directs.

SECTION XIX INSURANCE REQUIREMENTS

A. Consultant shall procure and maintain for the duration of the contract insurance against claims for injuries to persons or damages to property which may arise from or in connection with the performance of the work hereunder by the Consultant, its agents, representatives, or employees.

B. All insurance policies required by this Contact, except *Workers Compensation* and *Professional Liability*, shall name PMGAA, its agents, representatives, officers, directors, officials and employees as Additional Insured.

C. Minimum Scope and Limits of Insurance. Coverage shall be at least as broad as:

   i. Professional Liability (Errors and Omissions): Insurance appropriate to the Consultant's profession, with limit no less than $1,000,000 per occurrence or claim, $2,000,000 aggregate.
   ii. Commercial General Liability: Insurance Services Office Form CG 00 01 covering Bodily Injury and Property Damage on an "occurrence" basis, including personal & advertising injury with limits no less than $1,000,000 per occurrence, $2,000,000 General Aggregate.
   iii. Auto Liability: ISO Form CA 00 01 covering any auto (Symbol 1), or if Consultant has no owned autos, hired, (Symbol 8) and non-owned autos (Symbol 9), with limit no less than $1,000,000 Combined Single limit per accident for bodily injury and property damage
   iv. Workers' Compensation: Statutory Limits as required by the state of Arizona, and Employer's Liability Insurance with limit of no less than $1,000,000 per accident for bodily injury or disease.

D. If the Consultant maintains higher limits than the minimums shown above, PMGAA requires and shall be entitled to coverage for the higher limits maintained by the Consultant. Any available insurance proceeds in excess of the specified minimum limits of insurance and coverage shall be available to PMGAA.

E. Additional insurance provisions. The insurance policies shall provide, or be endorsed to include, the following provisions:

   i. Notice of Cancellation: Each insurance policy required above shall provide that coverage shall not be canceled, except with notice to PMGAA.
   ii. Waiver of Subrogation: Consultant waives any right to subrogation. Consultant shall obtain an endorsement necessary to affect this waiver of subrogation from the insurer for all lines of coverage required by this Contract, except *Workers Compensation* and *Professional Liability,* for claims arising out of the Consultant's work or service.
   iii. Primary Coverage: For all claims related to this Contract, all of Consultant's insurance policies will be primary and non-contributory. Any insurance or self-insurance maintained by PMGAA, its officers, officials, employees, or volunteers will be in excess of Consultant's insurance and will not contribute with it.

iv. Deductibles and Self-Insured Retentions: Any deductibles or self-insured retentions must be declared to and approved by PMGAA. PMGAA may require the Consultant to provide proof of ability to pay losses and related investigations, claim administration, and defense expenses within the retention.

v. Acceptability of Insurers: Insurance is to be placed with insurers with a current A.M. Best's rating of no less than A, VII, unless otherwise acceptable to PMGAA.

vi. Claims Made Policies: No Claims Made policies (other than Professional Liability) will be accepted. For policies that provide claims-made coverage:

a) The Retroactive Date must be shown and must be before the date of the contract or the beginning of contract work.

b) Insurance must be maintained, and evidence of insurance must be provided for at least five (5) years after completion of the contract of work.

c) If coverage is canceled or non-renewed, and not replaced with another claims-made policy form with a Retroactive Date prior to the contract effective date, the Consultant must purchase "extended reporting" coverage for a minimum of five (5) years after completion of work.

vii. Verification of Coverage: Consultant shall furnish PMGAA with original certificates and amendatory endorsements or copies of the applicable policy language effecting coverage required by this clause. All certificates and endorsements are to be received and approved by PMGAA before work commences. However, failure to obtain the required documents prior to the work beginning shall not waive the Consultant's obligation to provide the required insurance. PMGAA reserves the right to require complete, certified copies of all required insurance policies, including endorsements required by these specifications, at any time.

viii. Subcontractors: Consultant shall require and verify that all subcontractors maintain insurance meeting all the requirements stated herein, and Consultant shall ensure that PMGAA is an additional insured on insurance required from subcontractors.

ix. Special Risks or Circumstances: PMGAA reserves the right to modify these requirements, including limits, based on the nature of the risk, scope of services, prior experience, insurer, coverage, or other special circumstances.

SECTION XX NOTICES

Any notice, report or information which may be or is required to be given under this Contract will be in writing and shall be sent by registered or certified mail, return receipt requested, postage prepaid, addressed as follows:

TO PMGAA: Phoenix-Mesa Gateway Airport Authority
Attn: Engineering and Facilities Director
5835 South Sossaman Road
Mesa, Arizona 85212

TO CONSULTANT: TranSystems Corporation
Attn: David Lee
2000 Center Street, Suite 303
Berkeley, CA 94704

or to such other person(s) or address(es) as any such Party may designate from time to time by notice to the other Parties in accordance with this Section.

Executed as of the Commencement Date.

CONSULTANT
TranSystems Corporation, a Missouri C-Corporation

By: _____

Name: Jeffrey D Stiles

Title: Sr. Vice President

Date: 11/01/2021

PMGAA
PHOENIX MESA GATEWAY AIRPORT AUTHORITY, a joint powers airport authority authorized by the state of Arizona

By: _____

Name: J. Brian O'Neill, A.A.E.

Title: Executive Director/CEO

Date: _____

EXHIBIT A – SCOPE OF SERVICES & FEE SCHEDULE

The services to be performed by Consultant and the completion of related efforts are specified in the following Scope of Services & Fee Schedule agreed to by the parties.

SCOPE OF SERVICES

The Consultant's Scope of Services includes completion of professional design services for the Rental Car Care Facility project by TranSystems' in-house architectural and engineering staff and the following subconsultants:

- Survey and Civil design phase services provided by Dibble (reference scope and fee proposal dated October 27, 2021)
- Geotechnical investigation and engineering services provided by Speedie and Associates (reference scope and fee proposal dated October 26, 2021).

Work shall be accomplished in the following Tasks:

Task 1: Program Verification and Concept Design

Scope: Task 1 scope includes performance of the following services:

- Lead a project kick-off meeting/teleconference with PMGAA project management staff to review schedule, lines of communication, existing project information and project objectives.
- Collect available information (to be provided by PMGAA) related to rental car market at the Phoenix-Mesa Gateway Airport. Requested data include historical and forecast rental car transactions and airline passenger activities. Analyze data to identify future rental car facility requirements that will determine the size of the Car Care Facility (including number of queuing spaces, vacuum positions, car wash bays and car maintenance bays).
- Conduct field investigations to record existing conditions.
- Prepare a topographic and utility survey of the project site. Complete refined base CAD files for preparation of site demolition design and redevelopment of the Project Site.
- Perform geotechnical field exploration, to include drilling a total of four (4) structural borings to the depths of 10 to 20 feet below existing grade or auger refusal and two (2) pavement subgrade borings to depths of 5 feet. Access to the site by conventional truck-mounted drilling equipment is assumed to be free and unencumbered. Environmental testing services associated with subsurface field explorations are assumed to be not required and are excluded.
- Develop concept design to include the following information:
    - General construction notes.
    - Demolition sheets.
    - Survey.
    - Project site plan with structures.
    - Site and paving plans.
    - Lot and access grading and drainage plans and finish floor elevations.
    - Utility plans for water, sanitary sewer, gas and electric.
    - Car Service Canopy floor plan, roof plan and elevations.
    - Administration and Maintenance Building floor plan, elevations and sections.
    - Car Wash Building floor plan, elevations and sections.
    - Mechanical and electrical system narrative with enough information to assist in cost estimating.
    - Canopies for Car Service Bays and Maintenance Bays are assumed to be pre-manufactured systems with engineering provided by the fabricator.
    - Fuel system design is assumed to be not required for this project and is excluded from Consultant's Scope of Services. Infrastructure to accommodate for future fuel system installation will be included in concept design.

- Develop rough-order-of-magnitude (ROM) construction cost estimates.
- Program information, concept design and preliminary ROM construction cost estimates will be presented to PMGAA in a half-day meeting/teleconference.

Deliverables: This Task includes completion of the following electronic deliverables (in PDF file format), unless otherwise noted:

- Conceptual design drawings, at 35% design level.
- Preliminary ROM construction cost estimates.
- Presentation materials and meeting minutes summarizing discussions and decisions reached.

Task Duration: Five (5) weeks assumed, followed by two (2) weeks for PMGAA's review and approval.

Task 2: Design Development

Scope: Pending PMGAA's review and approval of Task 1 Deliverables, Consultant shall proceed with Task 2 scope, which includes performance of the following services:

- Lead a half-day Rental Car (RAC) industry meeting/teleconference with technical RAC agency representatives and PMGAA project management staff to present project program and conceptual design developed as part of Task 1.
- Analyze data obtained from field and laboratory testing performed as part of Phase 1 and prepare a geotechnical data report presenting all data obtained, together with conclusions and recommendations regarding design data, allowable bearing pressure and depth for shallow spread footings and on-site pavement design recommendations.
- Based on design input received during the RAC industry meeting, develop design development drawings and outline technical specifications, covering architectural, civil, structural, plumbing, mechanical, electrical, technology and fire protection design disciplines, for the following anticipated project elements:
    - Demolition of existing fence, building, canopy structure, pavement and fueling equipment.
    - Redevelopment of site to include expanded retention basin (if determined to be required), new asphalt and concrete pavements, utilities, fire hydrants, and traffic markings.
    - Car Service Canopy and car service vacuum equipment.
    - Administration and Maintenance Building (car lift equipment design assumed to be by RAC Tenant, with infrastructure provided to accommodate future installation).
    - Car Wash Building and wash equipment.
- Develop Architect/Engineer's estimate of probable construction costs.

Deliverables: This Task includes completion of the following electronic deliverables (in PDF file format), unless otherwise noted:

- Presentation materials and meeting minutes summarizing discussions and decisions reached.
- Geotechnical data report and recommendations (electronic PDF files and three signed hard copies).
- Design development drawings, at 65% design level.
- Technical specifications
- Architect/Engineer's estimate of probable construction costs.

Task Duration: Five (5) weeks assumed, followed by two (2) weeks for PMGAA's review and approval.

Task 3: Final Design

Scope: Pending PMGAA's review and approval of Task 2 Deliverables, Consultant shall proceed with Task 3 scope, which includes performance of the following services:

- Participate in a half-day review meeting/teleconference with PMGAA project management staff to discuss review comments for design development package developed as part of Task 2. Provide updates to RAC industry as directed by PMGAA.
- Develop final design drawings, technical specifications and design calculations, covering architectural, civil, structural, plumbing, mechanical, electrical, technology and fire protection design disciplines, for the following anticipated project elements:
    - Demolition of existing fence, building, canopy structure, pavement and fueling equipment.
    - Redevelopment of site to include expanded retention basin, new asphalt and concrete pavements, utilities, fire hydrants, and traffic markings.
    - Car Service Canopy and car service vacuum equipment.
    - Administration and Maintenance Building (car lift equipment design assumed to be by RAC Tenant, , with infrastructure provided to accommodate future installation).
    - Car Wash Building and wash equipment.
- Update Architect/Engineer's estimate of probable construction costs.

Deliverables: This Task includes completion of the following electronic deliverables (in PDF file format), unless otherwise noted:

- Presentation materials and meeting minutes summarizing discussions and decisions reached.
- Final design drawings, at 100% design level, suitable for permit application and bidding (electronic PDF and three signed hard copies, up to 30"x42" size).
- Technical specifications (electronic PDF and three bound hard copies)
- Design calculations (electronic PDF and three signed bound hard copies)
- Updated Architect/Engineer's estimate of probable construction costs.

Task Duration: Eight (8) weeks assumed, followed by two (2) weeks for PMGAA's review and approval.

Task 4: Permitting and Bidding Support

Permitting and bidding support services are not included in the Fee Schedule but can be provided by Consultant as additional services.

Task 5: Construction Support

Construction support services are not included in the Fee Schedule but can be provided by Consultant as additional services.

DESIGN SCHEDULE

Anticipated design schedule for Tasks 1, 2 and 3 is as follows:

Week No.	1	2	3	4	5	6	7	8	9	10	11	12	13	14	15	16	17	18	19	20	21	22	23	24
Week of…	22-Nov-21	29-Nov-21	6-Dec-21	13-Dec-21	20-Dec-21	27-Dec-21	3-Jan-22	10-Jan-22	17-Jan-22	24-Jan-22	31-Jan-22	7-Feb-22	14-Feb-22	21-Feb-22	28-Feb-22	7-Mar-22	14-Mar-22	21-Mar-22	28-Mar-22	4-Apr-22	11-Apr-22	18-Apr-22	25-Apr-22	2-May-22
Task 1: Program Verification and Concept Design																								
Anticipated contract award / NTP on Nov 22, 2021																								
Airport kick-off meeting, data collection																								
Field investigations / survey / geotech																								
Concept design drawings																								
ROM estimates																								
Airport review period																								
Task 2: Design Development																								
Airport / RAC industry meeting																								
Design development drawings																								
Outline specifications, cost estimates																								
Airport review period																								
Task 3: Final Design																								
Airport / RAC industry meeting																								
Final design drawings																								
Technical specifications, design calculations																								
Cost estimates																								
Airport review period																								

FEE SCHEDULE

For the services provided herein, PMGAA agrees to pay Consultant the not to exceed amount of $390,532.

A breakdown of the Consultant's fee is included in the table on the next page.

Phoenix-Mesa Gateway Airport (AZA)
Rental Car Care Facility Project
Design Services Budget Breakdown

Project Name:	AZA Rental Car Care Facility Project
Name of Firm (disciplines)	TranSystems (architecture, struct, MEP engineering)
Date Prepared:	October 29, 2021
Prepared for:	Phoenix-Mesa Gateway Airport Authority

Position/Personnel Title	Project Manager	QA/QC Manager	Senior Architect	Senior Designer	Sr Struct Engineer	BIM/CAD Tech Building	Senior Mech Engineer	Senior Plumbing Designer	Senior Elec Engineer	BIM/CAD Tech MEP	Project Admin	
Hourly Billing Rates (see detailed breakdown for Overhead and Fee information)	$208.68	$215.30	$187.79	$102.35	$207.06	$120.92	$178.47	$100.35	$193.28	$77.10	$79.30	
Labor	Hours	Hours	Hours	Hours	Hours	Hours	Hours	Hours		Hours	Hours	**Total Hours**
Task 1 Program Verification and Concept Design												
Project kick-off with Airport	4	2	2	4					4			**16**
Data collection and analysis	8	2	2	8	2				4		4	**30**
Field investigations			8	8					16			**32**
Concept design drawings	4	4	16	80	6	6	4	4	6	20		**150**
ROM cost estimates	4	2	4	4	2	2	2	2	2		2	**26**
Airport review meeting	8	4	4	8								**24**
Task 2 Design Development												
RAC industry meeting	16	8	4	8								**36**
Design development drawings	32	4	16	120	24	32	24	24	40	120		**436**
Outline specifications	8		8		4		4	4	4		8	**40**
Cost estimates	6	2	8	4	4		4	4	4			**36**
Task 3 Final Design												
Airport review meeting	12	2	4	12	2		2		2			**36**
Final design drawings	58	8	40	200	72	160	60	60	88	180		**926**
Technical specifications	24		24	20	40		24	24	24		10	**190**
Design calculations	4		12	20	50		16	16	24			**142**
Cost estimates	8	2	8	4	4		4	4	4			**38**
Task 4 Permitting and Bidding Support												
Not Included												**0**
Task 5 Construction Support												
Not Included												**0**
Total Hours:	**196**	**40**	**160**	**500**	**210**	**200**	**144**	**142**	**222**	**320**	**24**	**2,158**
Total Labor:	**$ 40,901**	**$ 8,612**	**$ 30,046**	**$ 51,173**	**$ 43,483**	**$ 24,184**	**$ 25,700**	**$ 14,250**	**$ 42,908**	**$ 24,671**	**$ 1,903**	**$ 307,833**

Subconsultants Breakdown

Name of Firm (disciplines)	Fee
Dibble (civil engineering / topo survey)	**$ 69,987**
Speedie & Assoc (geotech investigation)	**$ 5,788**
Total Subconsultant Fee:	**$ 75,775**

Direct Expenses Breakdown

Personnel (Home Office Location) / Expenses	Airfare (Round Trip)	Hotel/Night	# of Nights/Trip	Meals	Ground Transp.	Airport Parking / Mileage	Cost/Trip	# of Trips	Task 1 Concept Design	Task 2 Design Dev	Task 3 Final Design	**Total Cost**
Project Manager (Berkeley, CA)	$ 330	$ 151	1	$ 103	$ 100	$ 60	**$ 744**	**2**				**$ 1,488**
QA/QC Manager (Newark, NJ)	$ 500	$ 151	2	$ 171	$ 150	$ 120	**$ 1,243**	**1**				**$ 1,243**
Electrical Engineer (Ebensburg, PA)	$ 750	$ 151	2	$ 171	$ 150	$ 120	**$ 1,493**	**1**				**$ 1,493**
Printing / Reproductions									$ 300	$ 900	$ 1,500	**$ 2,700**
Total Direct Expenses:												**$ 6,924**

Total Fee $ 390,532

Phoenix-Mesa Gateway Airport (AZA)
Rental Car Care Facility Project
Staff and Labor Rate Breakdown

Project Name:	AZA Rental Car Care Facility Project
Name of Firm (disciplines)	TranSystems (architecture, struct, MEP engineering)
Date Prepared:	October 29, 2021
Prepared for:	Phoenix-Mesa Gateway Airport Authority

Overhead Rate	Fee (Profit)	Multiplier
144.72%	10.00%	2.69

Last Name	First Name	Staff Category	Assigned Project Role	Hourly Unloaded Labor Rate	Overhead	Fee	Hourly Loaded Billing Rate
Project Management and Architecture							
Steen	Douglas	Architect IV	QA/QC Manager	79.98	115.75	19.57	**215.30**
Lee	David	Architect IV	Project Manager	77.52	112.19	18.97	**208.68**
Lin	Yi-Jeng "Norman"	Architect IV	Senior Technical Architect	69.76	100.96	17.07	**187.79**
Petersen	Quentin	Architect III	Technical Architect	55.96	80.99	13.69	**150.64**
Neel	Justin	Technician III	Senior Designer	38.02	55.02	9.30	**102.35**
Xu	Zhongen "Joey"	Architect I	Designer	33.66	48.71	8.24	**90.61**
Tam	Tina	Administrator II	Project Administrator	29.46	42.63	7.21	**79.30**
Structural Engineering							
Woods	Mark	Structural Engineer III	Senior Structural Engineer	76.92	111.32	18.82	**207.06**
Bolton	Marcia	Structural Engineer III	Senior Structural Engineer	72.52	104.95	17.75	**195.22**
Thekkekara	Mathew	Structural Engineer III	Senior Structural Engineer	63.44	91.81	15.53	**170.78**
Gilliland	Michael	Technician IV	BIM/CAD Technician	44.92	65.01	10.99	**120.92**
Fatehi Peykani	Peyman	Technician II	BIM/CAD Technician	36.06	52.19	8.82	**97.07**
Mechanical/Electrical/Plumbing/Fire Protection Engineering							
Meitzler	Ryan	Mechanical Engineer III	Senior Mechanical Engineer	66.30	95.95	16.22	**178.47**
Oldham	Herbert	Designer III	Senior Mechanical Designer	52.50	75.98	12.85	**141.33**
Stiles	Michael	Designer III	Senior Plumbing Designer	37.28	53.95	9.12	**100.35**
Snyder	Brodi	Mechanical Engineer I	Mechanical Designer	32.84	47.53	8.04	**88.40**
Blankenship	John	Mechanical Engineer I	Mechanical Designer	31.16	45.09	7.63	**83.88**
Blickenderfer	Brad	Electrical Engineer III	Senior Electrical Engineer	71.80	103.91	17.57	**193.28**
Blickenderfer	John	Electrical Engineer III	Senior Electrical Engineer	42.64	61.71	10.43	**114.78**
Duman	Robert	Electrical Engineer III	Senior Electrical Engineer	63.12	91.35	15.45	**169.91**
Cannone	Brian	Technician II	BIM/CAD Technician	28.64	41.45	7.01	**77.10**

SCOPE OF WORK
Rental Car Care Facility Upgrades
Design and Bid Phases

Introduction

Dibble has been requested by the Tran Systems to provide survey and civil design phase services for the Rental Car Care Facility Upgrade project.

The key Dibble Team members consist of the following, (Dibble staff titles below are consistent with the classifications in the Manhour Matrix included with this proposal):

- Sr. Project Manager – Jared Bass, P.E.
- Project Manager – Adrian Carvajal, P.E.
- Senior Project Engineer – Travis Dunn, P.E
- Designer – Justin Rangus

The scope of this project will include the following improvements to the Rental Car Care Facility:

- Removal of existing facilities (building, utilities, pavement, etc.) needed for new facilities
- New entrance/exit configuration with expansion of the lot to the east
- New Car Care Facility (covered area with vacuum, etc.)
- New Car Wash Facility (building with car washing equipment)
- New Light Car Maintenance Facility (covered bays adjacent to office facility)
- Office and Restroom Facility
- Planning for future vehicle fueling system (fueling system not in scope)
- New configuration of car queuing prior to car maintenance
- New configuration of car queuing post car maintenance
- New signage (as requested by Owner)
- New pavement marking
- New site lighting (i.e. new light poles)
- New asphalt pavement

This proposal is based on an approximate 6-month Design Phase (conforming to Tran System's prime agreement with PMGAA)

Design Phase Services (Time and Materials – Not To Exceed)

1) Program Verification and Concept Design:

a) Topographic Survey and Coordination/Review: all survey work shall be conducted in compliance with FAA AC 150-5300-16/17/18. Survey efforts shall include documentation of the survey methodology used for data collection and accuracies thereof, along with use of existing Geodetic Control and Primary/Secondary Control Benchmarks. The survey shall utilize a robotic total station, GPS, and differential leveling, collecting topographic features within the project area, as defined in the attached survey limit exhibit (NAD 83 and NAVD 88, US Survey Feet). Additional survey that may be required following the initial topo, as defined in the attached exhibit, will be coordinated with the Sponsor.

All survey data shall meet or exceed the Level 1A horizontal and vertical minimum requirements for submittal to the FAA OE/AAA website.

b) Concept Design Plans: Dibble will prepare the design to 35% level. Concept plans shall include the following:

- General Construction Notes
- Design Legend, Abbreviations, Sheet Index, and Quantities Table
- Survey Control Sheet (establishment of survey control)
- Demolition Sheets
- Stormwater Pollution Prevention/Erosion Control Plan
- Project Site Plan with Structures
- Site and Paving Plans – Parking Lot & Building Sites

- Lot and Access Grading and Drainage Plans and finish floor elevations
- Utility Plans for water, sanitary sewer, gas, and electric
- Pavement Section and Typical Section Details
- Pavement Marking Plan and Details

c) Preliminary Drainage Analysis and Calculations: Dibble will perform a conceptual drainage analysis with the information available to date on the existing retention basin located in the Car Care Facility. The analysis will help determine if the existing basin is adequately sized for the current site. The basin will also be analyzed to confirm that it will provide sufficient volume for the improved site.

d) Client Meetings and Design Coordination: Dibble will participate in in-person or virtual meetings as noted in Tran System's prime agreement.

e) Internal QA/QC Project Review: in addition to the continual quality assurance reviews performed by the internal QA/QC reviewer, Dibble will perform additional quality control reviews prior to each milestone submittal utilizing standardized checking processes by a Senior Project Manager who is independent of the design team.

2) Design Development (DD) Tasks:

a) Design Development Plans: 65% plans shall be submitted for final review and approval by Tran Systems and Owner. At this level the design team will work with Owner to finalize items before the project enters the Construction Document phase.

b) Draft Technical Specifications: Dibble will prepare draft technical specifications (as required) for Owner review.

c) Client Meetings and Plan Review Site Visit: Dibble will participate in virtual (conference call) design meetings with the Tran Systems and Owner to discuss design elements and coordination items needed with PMGAA stakeholders per Tran Systems prime agreement with Owner. Additionally, the Dibble team will perform a plans-in-hand site visit with the plans to assure the site conditions are accurately represented on the plans.

d) Internal QA/QC Project Review: in addition to the continual quality assurance reviews performed by the internal QA/QC reviewer, Dibble will perform additional quality control reviews prior to each milestone submittal utilizing standardized checking processes by a Senior Project Manager who is independent of the design team.

e) FAA Airspace Obstruction Analysis Form 7460-1: a 7460-1 Exhibit will be prepared and submitted to the FAA OE/AAA website prior to construction at the time of permit submittal. This form will be submitted to the FAA – Phoenix ADO for review and any comments received by the FAA will be addressed prior to the submittal on the FAA website.

3) Construction Documents (CD) Tasks:

a) Construction Documents Plans: 100% plans shall have all internal and external review comments by the Owner incorporated and addressed.

The 100% plans will be sealed documents for permit review. A subset of the plans, containing only the relevant plan sheets for fire protection, will be separated out and provided to Tran Systems. This fire protection plan set will need to be submitted by the Contractor for permit by the City of Mesa.

b) Final Drainage Analysis and Calculations: Dibble will finalize drainage calculations and design based on the final site layout and grading of the Rental Car Care Facility. Analysis will be documented in a drainage memorandum, which will be included with the Final Design Report.

c) Final Design Report: the Final Design Report will be prepared to document major design criteria and basis of design. The report will provide design criteria and standards used in developing the construction documents (i.e. plans and technical specifications). The report will document all investigative results, including geotechnical investigations, site and utility design concepts, and drainage evaluations. The report will cover the following (at a minimum):

- Project Scope of Work

- Photographs of the Project Site
- List of anticipated and applicable Design Standards
- Geotechnical (Soils, foundation, and Grading)
- Drainage Design
- Pavement Design
- Utility Design
- Pavement Markings
- Parking Signage
- Project Cost Estimate (i.e. Total Project and Construction Cost)
- Reference Documents

d) Final Technical Specifications: Dibble will prepare final technical specifications (as required) for final Sponsor review.

e) Client Meetings and Design Coordination: Dibble will participate in virtual (conference call) design meetings with the Tran Systems and Owner to discuss design elements and coordination items needed with PMGAA stakeholders per Tran System's prime agreement.

f) Internal QA/QC Project Review: in addition to the continual quality assurance reviews performed by the internal QA/QC reviewer, Dibble will perform additional quality control reviews prior to each milestone submittal utilizing standardized checking processes by a Senior Project Manager who is independent of the design team.

4) Miscellaneous and Assumptions:

a) Site Visits:

1. Design Phase: 1 visits

b) AutoCAD Civil 3D 2019.

c) Deliverables: the following deliverables will be provided to Tran Systems in PDF format.

1. Program Verification and Concept Design (35%):
   i. Plans in 24"x36" and 11"x17" format
   ii. Cost Estimate
2. Design Development (65%):
   i. Plans in 24"x36" and 11"x17" format
   ii. Draft Technical Specifications
   iii. Cost Estimate
3. Construction Documents (95%):
   i. Plans in 24"x36" and 11"x17" format
   ii. Technical Specifications
   iii. Cost Estimate
   iv. Final Design Report

5) Exclusions to This Scope of Work:

a) Landscape, Irrigation, and Environmental Design Services including CATEX

b) Survey Services other than topographic survey, including: Replat/Lot Combinations, ALTA survey, legal descriptions & exhibits

c) Signal Design

d) Floodplain Analysis/Permitting, Offsite Drainage Study

e) Construction Phase services

f) City of Mesa Building Review

g) Structural drawings or calculations

Additional Services:

If the Consultant/Engineer is required to perform services in addition to those outlined in the Scope of Work, by reason of substantial changes ordered by the Owner or Architect or for any reason beyond the Consultant's/Engineer's control, they are to receive compensation for such services. Compensation for additional services not included in the Scope of Work for the basic services shall be based on time expended. Additional services must be approved by the Owner prior to the start of such work.

Invoices will be submitted monthly based on the hours spent on the survey and civil engineering services that are complete. These invoices will be due and payable upon receipt and will be considered past due if not paid within seven days after Client's receipt of payment from the Owner.

If you have any questions, please feel free to call us at (602) 957-1155.

Sincerely,

Kent E. Norcross, PE
Vice President, Land Development
Dibble

Adrian Carvajal, PE
Project Manager
Dibble

Firm:	Dibble		Contract Number: TBD
		0	Project Number: TBD
Project:	**Rental Car Care Facility Upgrades**		Task Number: TBD
	Design Services		Amendment Number: N/A
	Phoenix-Mesa Gateway Airport		FAA Number: N/A
Date:	10/27/2021		ADOT Number: N/A

DESIGN PHASE SERVICES - ESTIMATED MANHOURS

TASK	PRINCIPAL ENGINEER	SENIOR PROJECT MANAGER	PROJECT MANAGER	SENIOR ENGINEER	PROJECT ENGINEER	SENIOR DESIGNER	(RLS) SURVEY MANAGER	2-MAN SURVEY CREW	ADMIN ASSISTANT	TOTAL HOURS BY TASK
2 Program Verification & Concept Design										
1c Topographic Survey Review and Coordination					2	12	8	16		38
2a Concept Design Plans		1	8		32	40				81
2b Preliminary Drainage Analysis and Calculations			2		8					10
2c Client Meetings and Design Coordination		1	4		4					9
2d Internal QA/QC Project Review		4								4
3 Design Development Tasks										
3a Design Development Plans		1	12		36	56				105
3c Draft Technical Specifications		1	2		12					15
3d Client Meetings and Plan Review Site Visit			8		8					16
3e Internal QA/QC Project Review		4								4
3f FAA Airspace Obstruction Analysis (7460-1)		2			4					6
4 Construction Documents Tasks										
4a Construction Documents		1	16		40	70				127
4b Final Drainage Analysis and Calculations			2		8					10
4c Final Design Report		1	4		8					13
4d Final Technical Specifications		1	2		12					15
4e Client Meetings and Design Coordination		2	4		6					12
4f Internal QA/QC Project Review		4								4
TOTAL HOURS BY CLASSIFICATION	0	23	64	0	180	178	8	16	0	469

Firm:	Dibble	Contract Number:	TBD
	0	Project Number:	TBD
Project:	**Rental Car Care Facility Upgrades**	Task Number:	TBD
	Design Services	Amendment Number:	N/A
	Phoenix-Mesa Gateway Airport	FAA Number:	N/A
Date:	10/27/2021	ADOT Number:	N/A

DESIGN PHASE SERVICES SUMMARY

	Classification	Total Hours	Billing Rates	Total Costs
1	Principal Engineer	0	$281.20	$0.00
2	Senior Project Manager	23	$224.37	$5,160.51
3	Project Manager	64	$181.05	$11,587.20
4	Senior Engineer	0	$183.29	$0.00
5	Project Engineer	180	$143.36	$25,804.80
7	Senior Designer	178	$128.48	$22,869.44
8	Survey Manager	8	$158.73	$1,269.84
9	Survey Crew	16	$205.91	$3,294.56
10	Admin Assistant	0	$98.68	$0.00
	Totals:	**469**		**$69,987.00**

DESIGN PHASE SERVICES DIRECT COSTS

	Item	Cost	Type of Compensation
1	Submittal Printing (Dibble).....	$0.00	Direct Cost
2	Travel (Dibble).....	$0.00	Direct Cost
3	Meals (Dibble).....	$0.00	Direct Cost

Sub-Total for Direct Costs..... **$0.00**

DESIGN PHASE SERVICES SUBCONSULTANTS

	Firm	Cost	Type of Compensation
1			
2			
3			
4			

Sub-Total for Subconsultants: **$0.00**

DESIGN PHASE SERVICES TOTAL FEE

TOTAL FEE $69,987.00

Map

SURVEY AREA
S SOSSAMAN RD
S Avery
Rowen
Ave
Maricopa County GIO , Maricopa County Assessor's Office

SPEEDIE AND ASSOCIATES
Geotechnical • Environmental • Materials Engineers

October 26, 2021

David K. Lee, AIA
TranSystems
2000 Center Street
Suite 303
Berkeley, CA 94704

RE: Proposal for Geotechnical Investigation
PMGAA Rental Car Care Facility
6350 South Sossaman Road
Mesa, AZ
Proposal No. 78757 S

Mr. Lee:

We are pleased to provide our cost estimate to conduct a soil investigation at the above referenced site that will satisfy site development, pavement and foundation design requirements. All work on this project will be carried out under the overall supervision of a registered Professional Engineer in the state of Arizona.

We understand that construction will consist of a new rental car care facility with five buildings for vehicle maintenance, washing, vacuuming and office/storage uses and a 10,000 gallon above ground fuel storage tank. The buildings will be single story with slab on grade and masonry or steel frame construction. Structural loads are expected to be light to moderate and no special considerations regarding settlement tolerances are known at this time. Adjacent areas will be landscaped or paved to support moderate passenger and light truck traffic. Landscaped areas will be utilized for storm water retention and disposal.

We will drill and sample sufficient test borings to adequately determine subsoil conditions and provide samples for laboratory testing. Sufficient laboratory tests will be conducted to properly classify the soils encountered and provide data for engineering design. We presently anticipate drilling four (4) structural borings to the depths of 10 to 20 feet below existing grade or auger refusal, whichever comes first and two (2) pavement subgrade borings to depths of 5 feet. Access to the site by conventional truck-mounted drilling equipment is assumed to be free and unencumbered.

We will mark the proposed boring locations in the field with the locations to be approved by the client and owner. Speedie & Associates will take reasonable precautions to avoid damage to subterranean structures, pipelines and utilities including calling AZ811 (Blue Stake) and subcontracting a private utility locator to locate privately owned ***traceable*** underground utilities and reviewing all as-built utility plans provided by the client. The client (and owner) agree Speedie & Associates is not responsible for any damages to underground structures, pipelines and utilities that are not traceable, not called to our attention and/or correctly shown on the plans furnished to Speedie & Associates.

3331 East Wood Street ■ Phoenix, AZ 85040 ■ Phone 602-997-6391 ■ Fax 602-943-5508 ■ www.speedie.net
PHOENIX TUCSON FLAGSTAFF

We will analyze the data obtained from field and laboratory testing and prepare a report presenting all data obtained, together with our conclusions and recommendations regarding:

1. Design data, allowable bearing pressure and depth, for shallow spread footings.
2. Alternate foundation systems and design data, if indicated by soil conditions.
3. Design data and lateral bearing pressure for light pole and shade canopy foundations.
4. Settlement estimate for the foundation system.
5. Lateral pressures on temporary and permanent retaining and foundation walls.
6. Seismic Site Classification based on borings and published ground motion data.
7. Groundwater conditions, if any, to the depths which will influence design and/or construction of the proposed development.
8. Swell potential of in-situ and compacted soils and recommendations for control if highly expansive.
9. On-site pavement design to provide economy and adequate service.
10. Suitability of site soils for use as compacted fill and preferred earthwork methods, including clearing, stripping, excavation and construction of engineered fill.
11. Local excavation and trenching conditions and stability considerations.

We propose to provide the design services set forth herein for the following not-to-exceed amount, which includes all testing, engineering, reimbursable expenses, one hard copy of the report and an electronic PDF format file to be emailed upon completion. Should we be informed that additional hard copies of the report are needed after it has been finalized, there will be an additional charge of $25.00 per report.

Geotechnical Investigation with Report $ 5,787.90

We have the staff available to begin work immediately upon notice to proceed. Once we finalize the boring location plan, 10 to 12 working days are required to begin auger borings. Fieldwork for auger borings should take one day and lab testing about 3 weeks. The report will be issued within 7 days of the completion of the lab testing. As always, we stand ready to adjust this timeframe within reason to meet the schedule of the design team.

We appreciate the opportunity to submit this proposal for your consideration. If the terms set forth are satisfactory, please sign the attached copy and return it for our records.

Respectfully submitted,
SPEEDIE & ASSOCIATES, INC.

Kenneth M. Euge II
Project Coordinator

APPROVED AND ACCEPTED
For: TranSystem

By: _____
(Printed Name & Position)

_____
(Signature)

_____
(Date)

SPEEDIE & ASSOCIATES, INC. COST PROPOSAL DETAIL

PMGA Rental Car Facility

Proposal Number 78757 S

October 26, 2021

2019-2020 On-Call Contract 148730 w/ modified OH rate

Updated 11/27/19	#Units		Unit Rate		Direct Cost	Labor
Task 1 - Project Preparation						
Registered Engineer/PE	1	@	$173.22	hr		$173.22
Project Manager		@	$116.87	hr		$0.00
Staff Engineer/Special Inspector	6	@	$88.13	hr		$528.78
Drafting Technician	2	@	$88.13	hr		$176.26
Clerical.Administrative	2	@	$60.78	hr		$121.56
Certified Materials Field Technician		@	$65.34	hr		$0.00
Special Inspector		@	$88.13	hr		$0.00
		@		each		$0.00
Subtotal						$999.82
Task 2 - Field Investigation						
Registered Engineer/PE	1	@	$173.22	hr		$173.22
Project Manager		@	$116.87	hr		$0.00
Staff Engineer/Special Inspector	6	@	$88.13	hr		$528.78
Certified Materials Field Technician		@	$65.34	hr		$0.00
Trip Charge		@		ea		$0.00
Drill Rig Mobe/Demobe	1	@	$450.00	day	$450.00	
Drill Rig-CME 75 Auger Drill	4	@	$165.00	hr	$660.00	
T1060 Rapid Set Concrete		@	$55.00	bag	$0.00	
Asphalt Cold Patch	2	@	$15.50	each	$35.65	
Light Tower Rental		@	$125.00	day	$0.00	
coring		@	$250.00	each	$0.00	
Locator	1	@	$200.00	hr	$200.00	
		@		each	$0.00	
Reimbursables		@				
Water Truck		@	$1,000.00	week	$0.00	
Water Trailer		@	$720.00	week	$0.00	
Backhoe		@	$850.00	week	$0.00	
Equipment delivery Backhoe, Water Truck		@	$100.00	ea. way	$0.00	
Subtotal					$1,345.65	$702.00
Laboratory Testing (As of Feb 2006)						
Water Content		@	$10.00	ea	$0.00	
Grain Size Analysis	4	@	$165.00	ea	$660.00	
Hydrometer Analysis		@	$175.00	ea	$0.00	
Water content and Dry Density	2	@	$20.00	ea	$40.00	
Atterburg Limits	4	@	$60.00	ea	$240.00	
Direct Shear Test (Soil)		@	$450.00	3-points	$0.00	
Unconfined Compressive Strength (Soil)		@	$40.00	ea	$0.00	
R-Value		@	$300.00	ea	$0.00	
Consolidation Test	2	@	$115.00	ea	$230.00	
C.B.R. 3 Points		@	$500.00	ea	$0.00	
Moisture Density (Proctor)	1	@	$120.00	ea	$120.00	
Moisture Density (Modified)		@	$130.00	ea	$0.00	
Resistivity		@	$70.00	ea	$0.00	
pH		@	$35.00	ea	$0.00	
Chloride		@	$40.00	ea	$0.00	
Sulfate		@	$40.00	ea	$0.00	
Agronomic Analysis with Report		@	$200.00	ea	$0.00	
Bioassay Test with Report		@	$125.00	ea	$0.00	
Swell	1	@	$100.00	ea	$100.00	
Lime Mix Design		@	$1,000.00	ea	$0.00	
Subtotal					$1,390.00	
Report						
Registered Engineer/PE	1	@	$173.22	hr		$173.22
Project Manager	3	@	$116.87	hr		$350.61
Staff Engineer/Special Inspector	6	@	$88.13	hr		$528.78
Drafting Technician/Special Inspector	2	@	$88.13	hr		$176.26
Clerical/Administrative	2	@	$60.78	hr		$121.56
Certified Materials Field Technician		@	$65.34	hr		$0.00
		@		each		$0.00
Subtotal						$1,350.43
Task Subtotals					$2,735.65	$3,052.25
Estimated Total Project Cost						$5,787.90

EXHIBIT B - COMPENSATION

All compensation for services rendered by Consultant shall be based upon criteria established below. All services must be billed through the Consultant.

1. Fees to be Specified in Contract

Any and all services to be performed under this Contract require approval. All compensation for services shall be identified in writing. The Contract shall describe the scope of services to be performed (by tasks and subtasks, where appropriate), the fees associated with that performance, and any applicable special provisions. Consultant's compensation for services included in this Contract is totaled and set forth in **EXHIBIT A**, "Scope of Services and Fee Schedule".

2. Method of Payment

Subject to the terms of this Contract, PMGAA shall pay Consultant the appropriate rate or fixed price amount for services rendered as described in the Contract only after Consultant has submitted an invoice for services performed and PMGAA has certified and approved each invoice.

For services rendered in accordance with the Contract, Consultant shall submit to PMGAA an invoice depicting tasks performed and/or hours spent for services performed. Invoices must be based on the actual hours and/or expenses incurred for the services completed during the billing period. Consultant's invoices must specify that Consultant has performed the services, and PMGAA must certify and approve each invoice as a condition to payment.

3. Consultant Responsibilities for Compensation

Consultant shall prepare monthly invoices and/or progress reports in accordance with terms specified in the Contract. Progress reports will clearly indicate the progress to date and the amount of compensation due by virtue of that progress. All invoices for payment shall be for work completed unless otherwise agreed to by PMGAA. Invoices/requisitions for payment for services subject to funding by the FAA and/or ADOT shall include the documentation requirements of the FAA and/or ADOT, which are outlined in the *Airport Improvement Program (AIP) Handbook* dated September 30, 2014, or most current version.

4. PMGAA Responsibilities for Compensation

PMGAA agrees to pay Consultant's invoices for payment within 30 calendar days after the invoice is approved. PMGAA may withhold payment on any invoice if it believes that Consultant has not performed the work in a satisfactory manner. If PMGAA withholds payment to Consultant, PMGAA shall promptly notify Consultant and explain the reasons for the decision to withhold payment.

5. Billing Address

All invoices submitted to PMGAA for payment shall be submitted to:

Phoenix-Mesa Gateway Airport Authority
Attn: Engineering and Facilities Director
5835 S. Sossaman Road
Mesa, Arizona 85212

EXHIBIT C - SPECIAL PROVISIONS

1. Civil Rights Act of 1964, Title VI – General

The contractor agrees to comply with pertinent statues, Executive Orders and such rules as are promulgated to ensure that no person shall, on the grounds of race, creed, color or national origin, sex, age or disability be excluded from participating in any activity conducted with or benefiting from Federal assistance.

2. Civil Rights Act of 1964, Title VI – Assurances

During the performance of this Contract, the contractor, for itself, its assignees and successors in interest agrees as follows:

a. Compliance with Regulations – Compliance with Regulations: The contractor (hereinafter includes consultants) will comply with the Title VI List of Pertinent Nondiscrimination Acts And Authorities, as they may be amended from time to time, which are herein incorporated by reference and made a part of this contract.

b. Nondiscrimination – The contractor, with regard to the work performed by it during the contract, will not discriminate on the grounds of race, color, or national origin in the selection and retention of subcontractors, including procurements of materials and leases of equipment. The contractor will not participate directly or indirectly in the discrimination prohibited by the Nondiscrimination Acts and Authorities, including employment practices when the contract covers any activity, project, or program set forth in Appendix B of 49 CFR Part 21.

c. Solicitations for Subcontracts, including Procurements of Materials and Equipment – In all solicitations, either by competitive bidding, or negotiation made by the contractor for work to be performed under a subcontract, including procurements of materials, or leases of equipment, each potential subcontractor or supplier will be notified by the contractor of the contractor's obligations under this contract and the Non-discrimination Acts And Authorities on the grounds of race, color, or national origin.

d. Information and Reports – The contractor will provide all information and reports required by the Acts, the Regulations and directives issued pursuant thereto and will permit access to its books, records, accounts, other sources of information, and its facilities as may be determined by PMGAA or the FAA to be pertinent to ascertain compliance with such Nondiscrimination Acts And Authorities and instructions. Where any information required of a contractor is in the exclusive possession of another who fails or refuses to furnish the information, the contractor will so certify to PMGAA or the FAA as appropriate, and will set forth what efforts it has made to obtain the information.

e. Sanctions for Noncompliance – In the event of a contractor's noncompliance with the Nondiscrimination provisions of this contract, the Recipient will impose such contract sanctions as it or the FAA may determine to be appropriate, including, but not limited to:

i) Withholding of payments to the contractor under the contract until the contractor complies, and/or;
ii) Cancellation, termination, or suspension of the Contract, in whole or in part.

f. Incorporation of Provisions – The contractor will include the provisions of paragraphs one through six of this **EXHIBIT C** in every subcontract, including procurements of materials and leases of equipment, unless exempt by the Acts, the Regulations and directives issued pursuant thereto. The contractor will take action with respect to any subcontract or procurement as PMGAA or the FAA may direct as a means of enforcing such provisions including sanctions for noncompliance. Provided, that if the contractor becomes involved in, or is threatened with litigation by a subcontractor, or supplier because of such direction, the contractor may request PMGAA to enter into any litigation to protect the interests of PMGAA. In addition, the contractor may request the United States to enter into the litigation to protect the interests of the United States.

3. Civil Rights – Title VI List of Pertinent Nondiscrimination Acts and Authorities

During the performance of this contract, the contractor, for itself, its assignees, and successors in interest (hereinafter referred to as the "contractor") agrees to comply with the following non-discrimination statutes and authorities; including but not limited to:

- Title VI of the Civil Rights Act of 1964 (42 U.S.C. § 2000d *et seq*., 78 stat. 252), (prohibits discrimination on the basis of race, color, national origin);
- 49 CFR part 21 (Non-discrimination In Federally-Assisted Programs of The Department of Transportation—Effectuation of Title VI of The Civil Rights Act of 1964);
- The Uniform Relocation Assistance and Real Property Acquisition Policies Act of 1970, (42 U.S.C. § 4601), (prohibits unfair treatment of persons displaced or whose property has been acquired because of Federal or Federal-aid programs and projects);
- Section 504 of the Rehabilitation Act of 1973, (29 U.S.C. § 794 *et seq*.), as amended, (prohibits discrimination on the basis of disability); and 49 CFR part 27;
- The Age Discrimination Act of 1975, as amended, (42 U.S.C. § 6101 *et seq*.), (prohibits discrimination on the basis of age);
- Airport and Airway Improvement Act of 1982, (49 USC § 471, Section 47123), as amended, (prohibits discrimination based on race, creed, color, national origin, or sex);
- The Civil Rights Restoration Act of 1987, (PL 100-209), (Broadened the scope, coverage and applicability of Title VI of the Civil Rights Act of 1964, The Age Discrimination Act of 1975 and Section 504 of the Rehabilitation Act of 1973, by expanding the definition of the terms "programs or activities" to include all of the programs or activities of the Federal-aid recipients, sub-recipients and contractors, whether such programs or activities are Federally funded or not);
- Titles II and III of the Americans with Disabilities Act of 1990, which prohibit discrimination on the basis of disability in the operation of public entities, public and private transportation systems, places of public accommodation, and certain testing entities (42 U.S.C. §§ 12131 – 12189) as implemented by Department of Transportation regulations at 49 CFR parts 37 and 38;
- The FAA's Non-discrimination statute (49 U.S.C. § 47123) (prohibits discrimination on the basis of race, color, national origin, and sex);
- Executive Order 12898, Federal Actions to Address Environmental Justice in Minority Populations and Low-Income Populations, which ensures non-discrimination against minority populations by discouraging programs, policies, and activities with disproportionately high and adverse human health or environmental effects on minority and low-income populations;
- Executive Order 13166, Improving Access to Services for Persons with Limited English Proficiency, and resulting agency guidance, national origin discrimination includes discrimination because of limited English proficiency (LEP). To ensure compliance with Title VI, you must take reasonable steps to ensure that LEP persons have meaningful access to your programs (70 Fed. Reg. at 74087 to 74100);
- Title IX of the Education Amendments of 1972, as amended, which prohibits you from discriminating because of sex in education programs or activities (20 U.S.C. 1681 et seq).

4. <u>Certification Regarding Debarment, Suspension, Ineligibility and Voluntary Exclusion</u>

Consultant, by accepting this Contract, certifies that neither it nor its principals is presently debarred, suspended, proposed for debarment, declared ineligible, or voluntarily excluded from participation in this transaction by any government department or agency.

5. <u>Project Security</u>

As some or all portions of work possible during the Term of this Contract may be located inside the secured area of the Airport, adherence to and familiarity with federal security regulations is essential. For these projects, Consultant shall be responsible for fulfilling the security requirements described herein.

a. <u>Secured Area Access</u> – All Consultant personnel who require unescorted access to the secured area of the Airport, prior to the issuance of an Airport Identification badge, must successfully complete the Security Badge Application and Security Badge Authorization forms.

b. Employee Security Badges – If deemed necessary by PMGAA all Consultant and/or subcontractor personnel performing work functions in accordance with this Contract shall obtain and properly display an Airport security badge. Consultant shall submit a Security Badge Application form to the PMGAA security office for each employee requiring unescorted access, along with the current fee for each badge. Badge fees are identified on the current *Airport Fees, Services and Rental Rates* available via the Airport website at www.gatewayairport.com and are subject to change.

i. All fees must be paid to PMGAA by cash or check.
ii. Airport Security Badge Application forms and instructions are available via the Airport website at www.gatewayairport.com.
iii. An authorized representative of Consultant must also obtain and submit a Security Media Authorization form, which is to be submitted to the PMGAA badging office. The Security Media Authorization form and instructions are available via the Airport website at www.gatewairport.com.
iv. A training class on aviation security must be successfully completed before individuals are issued a badge. Fees for the security badge include attendance for the necessary training classes. Attendance at the security classes and issuance of the security badge may take two hours per person.
v. Additional information, including a "Frequently Asked Questions" is available via the Airport website at www.gatewairport.com or by contacting the PMGAA Badging Office at (480) 988-7522. The Badging Office is located at 5803 S. Sossaman Road, Mesa AZ 85212.
vi. Consultant shall immediately notify the PMGAA Badging Office of any Consultant personnel whose employment status has changed.
vii. Consultant shall retrieve all security badges and keys and return them to the PMGAA Badging Office. A fee, as indicated on the most current *Airport Rates and Charges Schedule*, will be charged for each badge that is damaged, lost or not returned.
viii. The PMGAA Badging Office will require a completed Security Badge Application from each Consultant employee so certified by Consultant as requiring such before a Security Badge is issued.
ix. Under certain circumstances and out of control of PMGAA, security measures may change on short notice. No deviations from any security measure shall be allowed at any time.
x. At all times, aircraft shall have the right-of-way over all vehicle traffic.

c. Fines – Due to both the safety and security precautions necessary at the Airport, any failure of the Consultant to adhere to prescribed Airport requirements/regulations has consequences that may jeopardize the health, welfare and lives of Airport customers and employees, as well as the Consultant's own employees. Therefore, if Consultant is found to be in non-compliance with any security, airfield badging/licensing and airfield safety requirement, a Notice of Violations (NOV) may be issued. A current listing of fines is available by contacting the PMGAA Badging Office.

6. Standard Terms & Conditions

PMGAA's Standard Terms & Conditions (in **EXHIBIT D** attached) include clauses that pertain to both construction and professional services. For such, the term "contractor" is to be considered same as "consultant." If a clause implies construction service then it is waived for a professional services contract. PMGAA reserves the right to make that determination if there is a conflict.

7. Federal and State Guidelines and Regulations

All work performed under this Contract must satisfy FAA and applicable agency standards, and be accomplished in accordance with applicable federal, state and local guidelines and regulations, including FAA Advisory Circulars, NEPA and Arizona environmental statutes.

Consultant shall perform the services as described in approved Contract in accordance with the applicable requirements imposed by PMGAA, ADOT, FAA and any other applicable sponsoring agencies. Consultant and its subconsultants/subcontractors, if any, shall comply with any and all applicable laws, regulations, executive orders, policies, guidelines, and any other requirements for FAA Airport Improvement Program (AIP) projects. Consultant shall provide PMGAA all information, reports, documents, and/or certifications requested by PMGAA for the satisfaction of any grant requirements for the reimbursement of services, including, without limitation, identifying

the specific services provided by Consultant and the billing period(s) during which services were or are to be provided. Nothing herein shall be construed as making the FAA or ADOT a party to this Contract.

8. Right to Contract With Other Firms

PMGAA shall have the right to contract with other firms and/or persons and/or to self-perform additional services, which may be the subject of this Contract. Consultant shall conduct its operations and perform any services authorized under the Contract so as not to interfere with or hinder the progress of completion of the work being performed by PMGAA and/or other firms and/or persons. Consultants working on the same project shall cooperate with each other in the performance, scheduling, and, if applicable, the integration of their respective services.

9. Independent Contractor Status

At all relevant times, Consultant is - and shall remain - an independent contractor with regard to performance of its services. PMGAA retains no control over Consultant, the performance of its work or services, or the safety of its employees. Consultant is not authorized to enter into any contract or commitment, authorize any payment, or accept any document, services, goods or materials for, in the name of, or on behalf of PMGAA.

EXHIBIT D – PMGAA STANDARD TERMS & CONDITIONS

1. **Certification.** Consultant certifies:
   a. The award of this Contract did not involve collusion or other anti-competitive practices.
   b. It shall not discriminate against any employee or applicant for employment in violation of Federal Executive Order 11246, or A.R.S. Section 31-1461, et. seq.
   c. It has not given, offered to give, nor intends to give at any time hereafter, any economic opportunity, future employment, gift, loan, gratuity, special discount, trip, favor, or service to a public servant in connection with this Contract; and Consultant hereby certifies that the individual signing this Contract is an authorized agent for Consultant and has the authority to bind the Consultant to the Contract.

2. **Termination of Contract.**

   a. PMGAA reserves the right to cancel this Contract in whole or in part due to failure of Consultant to carry out any term, promise, or condition of the Contract. At least ten (10) business days before terminating the Contract, PMGAA will issue a written notice of default specifying one of the following reasons. PMGAA shall, at all times during the term of the Contract or any extension term thereto, have the sole authority to determine if the default has been cured to its satisfaction.

      (1) Consultant has provided personnel that do not meet the requirements of the Contract.

      (2) Consultant has failed to perform adequately the stipulations, conditions or services/specifications required in this Contract.

      (3) Consultant has attempted to impose on PMGAA personnel or materials, products, or workmanship of unacceptable quality.

      (4) Consultant has failed to furnish the required service(s) and/or product(s) within the time stipulated in the Contract or associated Authorization of Services.

      (5) Consultant has failed to make progress in the performance of the requirements of the Contract or Authorization of Services, or Consultant fails to give PMGAA adequate assurance the Consultant will perform the Contract in full and on time.

      (6) Each payment obligation of PMGAA created hereby is conditioned on the availability of PMGAA, state, or federal funds appropriated for payment of the obligation. If funds are not available or allocated by PMGAA for continuance of service under this Contract, then PMGAA may terminate the Contract. PMGAA shall promptly notify Consultant regarding the service that may be affected by a shortage of funds. No penalty accrues to PMGAA if this provision is exercised, and PMGAA shall not be liable for any future payments due or for any damages as a result of termination under this paragraph.

   b. This Contract may be terminated at any time by mutual written consent or by PMGAA - with or without cause - provided the terminating party gives fourteen (14) calendar days' advance written notice to the other party. PMGAA may terminate this Contract, in whole or in part, for PMGAA's convenience and with fourteen (14) days' written notice. If this Contract is terminated, then PMGAA is liable only for services rendered and material received, certified, and approved by PMGAA under the Contract before the termination effective date.

3. **Dispute Resolution**.

   a. **Negotiations**. If a dispute arises out of or relates to this Contract or its breach, the parties to this Contract shall endeavor to settle the dispute through direct discussions as a condition precedent to mediation or binding dispute resolution.

   b. **Mediation**. Should the parties to this Contract be unable to resolve their dispute through direct negotiations, the parties to this Contract, upon the written request of either, shall engage in mediation, to be administered privately by a mediator and according to rules mutually agreed upon by the parties to this Contract, or, the absence of such mutual agreement, by a mediator appointed by JAMS and

administered by JAMS in accordance with its then-current mediation rules. The fees and costs of mediation shall be split equally by the parties to this Contract, but subject to reallocation following binding dispute resolution.

c. **Binding Dispute Resolution**. Should the parties to this Contract be unable to resolve their dispute through direct negotiations or mediation, either party may, within the time limitations for bringing claims under Arizona law and this Contract, commence formal dispute resolution proceedings. Both parties to this Contract consent to binding arbitration administered by JAMS according to its then current arbitration rules, provided, however, that (i) in the event both parties agree, the arbitration may be administered privately by an arbitrator and according to rules mutually agreed upon by the parties to this Contract, and (ii) in the event any party seeks relief against the other party or against a non-party which cannot fully be granted in arbitration, by reason of non-joinder or otherwise, the parties to this Contract are excused from this arbitration requirement and the parties to this Contract shall proceed in the state or federal courts of competent jurisdiction and located in Maricopa County, Arizona. In any arbitration or litigation, the prevailing party shall be entitled to an award of its reasonable attorneys' fees and costs as determined by the arbitrator or court as applicable.

4. **Independent Contractor.** At all times, each party acts in its individual capacity not as agent, employee, partner, joint venturer, or associate of the other party. An employee or agent of one party may not be deemed or construed to be the employee or agent of the other party for any purpose whatsoever. Neither Consultant nor any of its employees are entitled to compensation from PMGAA in the form of salaries, paid vacation, or sick days. PMGAA will not provide any insurance to Consultant, including *Workers' Compensation* coverage. PMGAA will not withhold FICA, taxes, or any similar deductions from PMGAA's payments under this Contract.

5. **Affirmative Action.** Consultant shall abide by all the federal and state of Arizona provisions for equal opportunity in the work place.

6. **Human Relations**. Consultant shall abide by all the federal and state of Arizona provisions against discrimination of disadvantaged business enterprises in applicable PMGAA contracts.

7. **Non-Exclusive Contract**. This Contract is for the sole convenience of PMGAA. PMGAA reserves the right in its discretion to obtain the same or similar goods or services from any other source.

8. **Americans with Disabilities Act.** Consultant shall comply with all applicable provisions of the *Americans with Disabilities Act* (Public Law 101-336, 42 U.S.C. 12101-12213) and applicable federal regulations under the *Act*.

9. **Confidentiality of Records**. Consultant shall establish and maintain procedures and controls that are acceptable to PMGAA for the purpose of assuring that no information contained in its records or obtained from PMGAA or from others in carrying out its functions under the Contract shall be used by or disclosed by it, its agents, officers, or employees, except as required to efficiently perform duties under this Contract. Persons requesting such information should be referred to PMGAA. Consultant also agrees that any information pertaining to individual persons shall not be divulged other than to employees or officers of Consultant as needed for the performance of duties under the Contract, unless otherwise agreed to in writing by PMGAA.

10. **Gratuities.** PMGAA may, by written notice to the Consultant, cancel this Contract if it is found that gratuities, in the form of entertainment, gifts or otherwise, were offered or given by Consultant or any agent or representative of Consultant, to any officer or employee of PMGAA involved in the amending, or the making of any determinations with respect to the performing of such Contract. If this Contract is canceled by PMGAA under this provision, PMGAA shall, in addition to any other rights and remedies, repay to the Consultant the amount of the gratuity.

11. **Applicable Law.** This Contract shall be governed by, and PMGAA and Consultant shall have, all remedies afforded each by the *Uniform Commercial Code*, as adopted in the state of Arizona, except as otherwise provided in this Contract or in laws pertaining specifically to PMGAA. This Contract shall be governed by

the laws of the state of Arizona, and suits pertaining to this Contract shall be brought only in federal or state courts in the state of Arizona.

12. **Contract**. This Contract is based on and the result of a negotiated Scope of Work and Proposal, Bid or Statement of Qualifications submitted by Consultant under this RFP, IFB or RFQ. The Contract contains the entire agreement between PMGAA and Consultant. No prior oral or written agreements, contracts, proposals, negotiations, purchase orders, or master agreements (in any form) are enforceable between the parties.

13. **Contract Amendments**. This Contract shall be modified only by a written amendment signed by the PMGAA Executive Director or his/her designee, and persons duly authorized to enter into contracts on behalf of Consultant.

14. **Provisions Required by Law**. Each and every provision of law and any clause required by law to be in the Contract shall be read and enforced as though it were included herein, and if through mistake or otherwise any such provision is not inserted, or is not correctly inserted, then upon the application of either party the Contract shall forthwith be physically amended to make such insertion or correction.

15. **Severability.** The provisions of this Contract are severable to the extent that any provision or application held to be invalid shall not affect any other provision or application of the Contract, which may remain in effect without the valid provision, or application.

16. **Protection of Government Property.** Consultant shall use reasonable care to avoid damaging all PMGAA property, including buildings, equipment, and vegetation (such as trees, shrubs, and grass). If Consultant damages PMGAA's property in any way, Consultant shall immediately report such damage to PMGAA and repair or replace the damage at no cost to PMGAA, as directed by the PMGAA Executive Director. If Consultant fails or refuses to repair or replace the damage, then PMGAA may terminate the Contract, and PMGAA shall deduct the repair or replacement cost from money due Consultant under the Contract.

17. **Interpretation – Parol Evidence.** This Contract is intended by the parties as a final expression of their agreement and is intended also as a complete and exclusive statement of the terms thereof. No course of prior dealings between the parties and no usage of the trade shall be relevant to supplement or explain any term used in this Contract. Acceptance or acquiescence in a course of performance rendered under this Contract shall not be relevant to determine the meaning of this Contract even though the accepting or acquiescing party has knowledge of the nature of the performance and opportunity to object.

18. **Subcontracts.** Consultant shall not assign any rights or interest nor enter into any subcontract with any other party to furnish any of the materials, goods or services specified herein without the prior written permission of PMGAA. PMGAA may, at its sole discretion, accept or reject proposed subcontractors or assignment. PMGAA shall notify Consultant of its acceptance or rejection within forty-five (45) days or written request by Consultant. All subcontracts shall comply with federal and state laws and regulations applicable to the materials, goods or services covered by the subcontract and shall include all the terms and conditions set forth herein, which shall apply with equal force to the subcontract, as if the subcontractor were the Consultant referred to herein. Consultant is responsible for Contract performance whether subcontractors are used.

19. **No Waiver.** No provision in this Contract shall be construed, expressly or by implication, to waive either party's existing or future claim, right, or remedy available by law for breach of contract. The failure of either party to insist on strict performance of any Contract term or condition; to exercise or delay exercising any right or remedy provided in the Contract or by law; or to accept materials, services, or Consultant's services under this Contract or imposed by law, shall not be deemed a waiver of any right of either party to insist upon strict performance of the Contract.

20. **Warranties.** Consultant warrants that all materials and services delivered under this Contract shall conform to the specifications thereof. Mere receipt of shipment of the material or service specified and any inspection incidental thereto by PMGAA, shall not alter or affect the obligations of Consultant or the rights of PMGAA under the foregoing warranties. Additional warranty requirements may be set forth in this Contract.

21. **Indemnification.** To the fullest extent permitted by law, Consultant shall defend, save, indemnify, and hold harmless PMGAA, its agents, representatives, officers, directors, officials, and employees (collectively the "Indemnitees"), for, from and against all claims, damages, losses and expenses, including but not limited to attorney fees, court costs, expert witness fees, and the cost of appellate proceedings, relating to, arising out of, or alleged to have resulted from the Consultant's acts, errors, omissions, or mistakes relating to Consultant's services under this Contract.

22. **Right to Assurance.** Whenever one party to this Contract in good faith has reason to question the other party's intent to perform, the former party may demand that the other party give a written assurance of this intent to perform. If a demand is made and no written assurance is given within five (5) business days, the demanding party may treat this failure as an anticipatory repudiation with this Contract.

23. **Advertising.** Consultant shall not advertise or publish information concerning this Contract without prior written consent of PMGAA.

24. **Right to Inspect.** PMGAA may, at reasonable times, and at PMGAA's expense, inspect the place of Consultant's or any of Consultant's subcontractor's business, which is related to the performance of this Contract or related subcontract.

25. **Force Majeure.** In the event either party shall be delayed or hindered in or prevented from the performance of any covenant, agreement, work, service, or other act required under this Contract to be performed by such party ("Required Act"), and such delay or hindrance is due to causes entirely beyond its control such as riots, insurrections, martial law, civil commotion, war, fire, flood, earthquake, or other casualty or acts of God ("Force Majeure Event"), then the performance of such Required Act shall be excused for the period of delay and the time period for performance of the Required Act shall be extended by the same number of days in the period of delay. For purposes of this Contract, the financial inability of Consultant to perform any Required Act, including, without limitation, failure to obtain adequate or other financing shall not be deemed to constitute a Force Majeure Event. A Force Majeure Event shall not be deemed to commence until ten (10) days before the date on which the party who asserts some right, defense, or remedy arising from or based upon such Force Majeure Event gives written notice thereof to the other party. If abnormal adverse weather conditions are the basis for a claim for an extension of time due to a Force Majeure Event, the written notice shall be accompanied by data substantiating (a) that the weather conditions were abnormal for the time and could not have been reasonably anticipated and (b) that the weather conditions complained of had a significant adverse effect on the performance of a Required Act. To establish the extent of any delay to the performance of a Required Act due to abnormal adverse weather, a comparison will be made of the weather for the time of performance of the Required Act with the average of the preceding ten (10) years' climatic range based on the National Weather Service statistics for the nearest weather reporting station to the Premises. No extension of time for or excuse for a delay in the performance of a Required Act will be granted for rain, snow, wind, cold temperatures, flood, or other natural phenomena of normal intensity for the locality where the Premises are located.

26. **Inspection.** All material or service is subject to final inspection and acceptance by PMGAA. Material or service failing to conform to the specifications of this Contract will be held at Consultant's risk and may be returned to Consultant. If so returned, all costs are the responsibility of Consultant. Noncompliance shall conform to the cancellation clause set forth in this Contract.

27. **Exclusive Possession.** All services, information, computer program elements, reports, and other deliverables, which may be created under this Contract, are the sole property of PMGAA and shall not be used or released by Consultant or any other person except with prior written permission by PMGAA.

28. **Title and Risk of Loss.** The title and risk of loss of materials or services shall not pass to PMGAA until PMGAA actually receives the material or service at the Airport, unless otherwise provided within this Contract.

29. **Liens.** All materials, services, and other deliverables supplied to PMGAA under this Contract must be free of all liens and other encumbrances. Upon request of PMGAA, Consultant shall provide a formal release of all liens.

30. **Licenses.** Consultant shall maintain in current status all federal, state, and local licenses and permits required for the operation of the business conducted by Consultant as applicable to this Contract.

31. **Subsequent Employment.** PMGAA may cancel this Contract without penalty or further obligation in accordance with A.R.S. Section 38-511 if any person significantly involved in initiating, negotiating, securing, drafting, or creating the contract, on behalf of the PMGAA is or becomes, at any time while the Contract or any extension of the contract is in effect, an employee of, or a contractor to any other party to this Contract with respect to the subject matter of the Contract. Such cancellation shall be effective when the parties to this Contract receive written notice from PMGAA, unless the notice specifies a later time.

32. **Clean Up.** Consultant shall at all times keep Contract performance areas, including storage areas used by the Consultant, free from accumulation of waste material or rubbish and, prior to completion of the work, remove any rubbish from the premises and all tools, scaffolding, equipment and materials not property of PMGAA. Upon completion of any repair, Consultant shall leave the work and premises in clean, neat, and workmanlike condition.

33. **Patents.** Consultant shall defend, indemnify, and hold harmless PMGAA, its officers and employees from all liabilities, claims, damages, costs, or expenses, including, but not limited to attorneys' fees, for any alleged infringement of any person's patent rights or copyrights in consequence of the use by PMGAA, its officers, employees, agents, and other duly authorized representatives of tangible or intellectual property supplied to PMGAA by Consultant under this Contract.

34. **Records and Audit Rights.** Consultant's and all of its approved subcontractors' books, records, correspondence, accounting procedures and practices, and any other supporting evidence relating to this Contract, including the papers of all Consultant and subcontractor employees that work on the Contract (all the foregoing collectively referred to as "Records"), must be open to inspection and subject to audit and/or reproduction during normal working hours by PMGAA. PMGAA is entitled to evaluate and verify all invoices, payments or claims based on Consultant's and its subcontractor's actual costs (including direct and indirect costs and overhead allocations) incurred or units expended directly in the performance of work under this Contract. For any audit under this Section, Consultant and its subcontractors hereby waive the right to keep such Records confidential. PMGAA is entitled to access to these Records from the effective date of this Contract for the duration of the work and until five years after the date of final payment by PMGAA to Consultant under the Contract. During normal working hours, PMGAA is entitled to access to all necessary Consultant and subcontractor facilities and shall be provided adequate and appropriate workspace, in order to conduct audits under this Section. PMGAA shall give Consultant or subcontractors reasonable advance notice of intended audits. Consultant shall require its subcontractors to comply with the provisions of this Section by including its requirements in all subcontracts related to this Contract.

35. **E-Verify Requirements.** To the extent applicable under A.R.S. § 41-4401, Consultant and its subcontractors warrant compliance with all federal immigration laws and regulations that relate to their employees, and compliance with the E-Verify requirements under A.R.S. §23-214(A). Consultant's or its subcontractors' failure to comply with such warranty shall be deemed a material breach of this Contract and may result in the termination of this Contract by PMGAA. PMGAA shall have the right to inspect the papers of Consultant's and any of Consultant's subcontractor's employee who works on this Contract to ensure the Consultant is complying with this paragraph.

EXHIBIT E – CONSULTANT'S RFQ SUBMITTAL

Consultant's Proposal in response to Phoenix-Mesa Gateway Airport Authority's Solicitation 2022-006-RFQ dated September 1, 2021, is hereby incorporated herein and made part of this Contract.

Phoenix-Mesa Gateway Airport Authority
5835 S Sossaman Road
Mesa, Arizona 85212-6014
www.gatewayairport.com

Management Information Report

To: **Board of Directors**
From: **Chuck Odom, Chief Financial Officer**
Through: **J. Brian O'Neill, A.A.E., Executive Director/CEO**
Re: Solicitation Notification
Date: **November 16, 2021**

This report is to provide notification of the active and upcoming solicitations to help ensure compliance with the Phoenix-Mesa Gateway Airport Authority procurement transparency clause. The active activities include the following:

Active/Pending Solicitations

Type Solicitation	Number	Title	Anticipated Contract Award (Board Action)
Request for Proposals	2022-003-RFP	Parking Access Revenue Control System	November 2021
Request for Qualifications	2022-006-RFQ	Rental Car Care Facility Design Services	November 2021
Request for Proposals	2022-011-RFP	Pre-Conditioned Air Units	November 2021
Request for Proposals	2022-001-RFP	Master Developer, Gateway*East*	December 2021
Request for Proposals	2022-012-RFP	On-Call Videography & Drone Videography Services	January 2022

Future Solicitations

Type Solicitation	Number	Title	Scheduled for Release	Anticipated Contract Award (Board Action)
Invitation for Bid	2022-004-IFB	Taxiway W Rehabilitation	November 2021	December 2021
Request for Qualifications	2022-005-RFQ	Fabrication and Installation of Signs	November 2021	January 2022
Request for Qualifications	2022-013-RFQ	On-Call Environmental Services	December 2021	February 2022

If you have any questions about the solicitations or the procurement process, please feel free to contact me at 480-988-7613.

Phoenix-Mesa Gateway Airport Authority
5835 S Sossaman Road
Mesa, Arizona 85212-6014
www.gatewayairport.com

Management Information Report

To: Board of Directors
From: Chuck Odom, Chief Financial Officer
Through: J. Brian O'Neill, A.A.E., Executive Director/CEO
Re: September 2021 Financials
Date: November 16, 2021

Attached is the monthly Financials Report for September 2021.

Phoenix-Mesa Gateway Airport Authority
AIRPORT - All Operations P&L
September, 2021

	Month of September 2021				Y-T-D as of September 2021			
	September FY21 Actual	September FY22 Actual	YOY Variance	B/(W)	YTD FY21 Actual	YTD FY22 Actual	Y-T-D Variance	B/(W)
Aeronautical Operating Revenues								
Aircraft Parking	17,605	16,947	(658)	-4%	56,241	62,557	6,316	11%
Fuel Flowage Fees	58,054	41,061	(16,993)	-29%	192,639	138,161	(54,478)	-28%
Landing Fees	73,233	97,307	24,074	33%	338,640	361,924	23,284	7%
Lease Income Aero	191,469	243,813	52,344	27%	693,896	845,061	151,165	22%
Fuel Sales	485,753	417,694	(68,059)	-14%	1,312,475	1,245,088	(67,387)	-5%
Services Sold - Aero	420,476	281,811	(138,665)	-33%	1,502,203	1,059,157	(443,046)	-29%
Sub-total Aero Operating Revenues	1,246,590	1,098,633	(147,957)	-12%	4,096,094	3,711,948	(384,146)	-9%
Non-Aeronautical Operating Revenues								
Concessions	28,561	61,893	33,332	117%	129,854	212,476	82,622	64%
Lease Income Non-Aero	105,798	117,502	11,704	11%	316,587	361,151	44,564	14%
Parking	183,852	275,447	91,595	50%	719,458	1,158,497	439,039	61%
Rental Car Fees	66,974	107,260	40,286	60%	192,908	320,327	127,419	66%
Svcs Sold - Non Aero	4,200	2,203	(1,997)	-48%	15,350	10,701	(4,649)	-30%
Sub-total Non-Aero Operating Revenues	389,385	564,305	174,920	45%	1,374,157	2,063,152	688,995	50%
Total Operating Revenues	**1,635,975**	**1,662,938**	**26,963**	**2%**	**5,470,251**	**5,775,100**	**304,849**	**6%**
Operating Expenses								
Costs of Goods Sold	262,133	273,774	(11,641)	-4%	702,606	813,456	(110,850)	-16%
Personnel	649,497	752,656	(103,159)	-16%	1,960,511	2,235,769	(275,258)	-14%
Comm & Utilities	90,556	93,103	(2,547)	-3%	287,719	303,432	(15,713)	-5%
Contractual Services	379,296	565,250	(185,954)	-49%	1,105,378	1,347,747	(242,369)	-22%
Insurance	41,989	45,974	(3,985)	-9%	125,705	142,053	(16,348)	-13%
Other	19,354	13,613	5,741	30%	37,978	50,607	(12,629)	-33%
Repair & Maintenance	61,555	32,467	29,088	47%	105,940	126,152	(20,212)	-19%
Supplies & Materials	54,802	97,622	(42,820)	-78%	160,868	271,344	(110,476)	-69%
Air Service Incentives [2,000,000]	0	0	0	0	0	0	0	0
Operating Contingency [2,353,258]	0	0	0	0	0	0	0	0
Total Operating Expenses	**1,559,182**	**1,874,459**	**(315,277)**	-20%	**4,486,705**	**5,290,560**	**(803,855)**	-18%
Operating Income (Loss)	**76,793**	**(211,521)**	**(288,314)**	-375%	**983,546**	**484,540**	**(499,006)**	-51%
	4.7%	-12.7%			18.0%	8.4%		
Depreciation		1,413,015				4,247,529		
ARPA Act Recovery		0						
CRRSAA Act Recovery		4,177,264	CRRSAA Act Fully Drawn					
CARES Act Recovery		20,530,277	CARES Act Fully Drawn					
Total Recovery-to-Date		24,707,541						

Phoenix-Mesa Gateway Airport Authority
5835 S Sossaman Road
Mesa, Arizona 85212-6014
www.gatewayairport.com

Management Information Report

To: **Board of Directors**
From: **Bob Draper, Engineering and Facilities Director**
Through: **Chuck Odom, Chief Financial Officer**
J. Brian O'Neill, A.A.E., Executive Director/CEO
Re: ATCT Construction Related Costs
Date: **November 16, 2021**

On July 21, 2020, the Board approved a contract for Construction Administration Services with Leo A. Daly for the not to exceed amount of $344,663 and with ACS Services LLC for Quality Assurance Material Testing in the not to exceed amount of $74,933 related to the construction of the new Air Traffic Control Tower. Due to the complexity of the project, price increases, supply chain issues, scheduling, and the CMAR's, DPR, increased submittals and request for information, additional funds are needed to complete the project.

Leo A. Daly's costs are anticipated to increase by $121,647 to a new total cost of $466,309. ACS Services LLC's costs are anticipated to increase by $23,678 to a new total cost of $98,611. The total additional costs needed to complete the project is $324,405.

The additional funds needed will come from the 2022 Non-Grant Capital Contingency budget.

Phoenix-Mesa Gateway Airport Authority
5835 S Sossaman Road
Mesa, Arizona 85212-6014
www.gatewayairport.com

Management Information Report

To: **Board of Directors**
From: **Bob Draper, Engineering and Facilities Director**
Through: **Chuck Odom, Chief Financial Officer**
J. Brian O'Neill, A.A.E., Executive Director/CEO
Re: Project 1098, Cell Phone and Terminal Employee Parking Lots Change Order
Date: **November 16, 2021**

On June 15, 2021, the Board approved a contract for the Cell Phone and Terminal Employee Parking Lots project with Ace Asphalt of Arizona, now doing business as Sunland Asphalt, resolution #21-24, in the amount of $604,733.79. Since the project has been underway, Airport staff has issued one change order against the contract for required modifications.

The scope of entry and exit devices were removed from the project to not conflict with the upcoming PARCs project. Way finding signs were added to the scope of work in order to get Airport customers, taxi drivers, and TNCs directed to the new location. Due to unforeseen issues with a crushed conduit intended for use, the contractor had to bore new conduit under Sossaman Road to provide power for the lights in the new Cell Lot.

The total net amount of this change order is an increase of $6,507.16 bringing the total project amount to $611,240.95.

Phoenix-Mesa Gateway Airport Authority
5835 S Sossaman Road
Mesa, Arizona 85212-6014
www.gatewayairport.com

Management Information Report

To: **Board of Directors**
From: **Bob Draper, Engineering and Facilities Director**
Through: **Chuck Odom, Chief Financial Officer**
J. Brian O'Neill, A.A.E., Executive Director/CEO
Re: Terminal Modernization Design Costs
Date: **November 16, 2021**

On July 20, 2021, the Board approved a contract with DWL Architects + Planners, Inc. (DWL) for Design Services for the Terminal Modernization project in the not to exceed amount of $948,243. During the preparation of the design concepts, the final building size increased from approximately 20,000SF as previously anticipated, to approximately 30,000SF. The increased size of the building creates additional work for DWL and their subconsultants. Additionally, new ADA code requirements in regard to hearing assistance requires additional design improvements be incorporated into the project.

Due to the increased building size and new code requirements, an additional $80,070 is needed to complete the project, resulting in a total cost of $1,028,313.

The additional funds needed are included in the FY22 Capital Budget funded under CIP 1201 with Non-grant funds.

Phoenix-Mesa Gateway Airport Authority
5835 S Sossaman Road
Mesa, Arizona 85212-6014
www.gatewayairport.com

Management Information Report

To: **Board of Directors**
From: **Chuck Odom, Chief Financial Officer**
Through: **J. Brian O'Neill, A.A.E., Executive Director/CEO**
Re: **Administration Building Water Main Leak – Emergency Procurement**
Date: **November 16, 2021**

On the morning of October 19, 2021, it was reported to PMGAA staff that water was observed bubbling up from the asphalt in a section of the parking lot next to the Airport Administration Building. PMGAA staff proactively shut-off water to the Administration Building and quickly determined that there was a leak in the main water lines to the building. Staff contacted the Basalt Building Group (Basalt) and SDB Contracting Services (SDB) for emergency repairs. Basalt group provided staff an estimated quote for the repairs in the amount of $10,000 and SDB provided a quote of $1,000 for the necessary asphalt repairs.

On October 19, 2021, PMGAA Executive Staff authorized the emergency procurement for the waterline repairs with Basalt and SDB. Basalt was able to mobilize quickly and had all the necessary repairs completed by October 20, 2021 and SDB had the asphalt repairs completed by October 26, 2021. The total repair cost was $10,938 ($1,000 for SDB and $9,938 for Basalt).

In accordance with PMGAA's Procurement Policy, this report is to notify the Board of the emergency procurement for these urgently needed services. Staff reviewed the quotes to ensure pricing was in line with the expected material and services to provide satisfactory work results.

NOTICE AND AGENDA OF MEETING OF THE
PHOENIX-MESA GATEWAY AIRPORT AUTHORITY
BOARD OF DIRECTORS

Pursuant to A.R.S. § 38-431.02, notice is hereby given to the members of the Phoenix-Mesa Gateway Airport Authority and to the public that the Phoenix-Mesa Gateway Airport Authority will hold a meeting open to the public on **Tuesday, December 21, 2021 beginning at 9:00 a.m.** in the Board Room (Saguaro A & B) of the Gateway Administration Building, 5835 South Sossaman Road, Mesa, Arizona. Members of the Phoenix-Mesa Gateway Airport Authority may attend either in person or by telephone. The Board may vote to hold an executive session for the purpose of obtaining legal advice from the Board's attorney on any matter listed on the agenda pursuant to A.R.S. § 38-431.03 (A)(3)&(4).

The agenda for the meeting is as follows:

1. **Call to Order** (Mayor John Giles, Chair)
   Members of the Phoenix-Mesa Gateway Airport Authority will attend either in person or via videoconference.

2. **Roll Call** (Mayor John Giles, Chair)

3. **Pledge of Allegiance**

4. **Call to the Public**
   Members of the Board may not discuss items that are not on the agenda. Therefore, action taken as a result of public comment will be limited to directing staff to study the matter or scheduling the matter for further consideration and decision at a later date. Maximum of three minutes per speaker.

5. **Executive Director's Report** - J. Brian O'Neill, A.A.E., Executive Director/CEO

6. **Gateway*East* Presentation** – Shea Joachim, Business Development Director

7. **Consent Agenda**

   a) **Minutes** of the Board Meeting held on November 16, 2021.

   b) **Resolution No. 21-53 –** Authorizing the purchase of airfield asphalt services with **Sunland Asphalt & Construction, LLC** for an amount not to exceed $99,770.88.

   c) **Resolution No. 21-54 –** Authorizing the Executive Director to execute an Air Carrier Operating Agreement with **WestJet**, an Alberta Partnership, for commercial air service at the Airport.

   d) **Resolution No. 21-55 –** Approving a new one-year Air Carrier Operating Agreement with **Allegiant Air, LLC**.

   e) **Resolution No. 21-56 –** Authorizing Amendment 2 to the Land Lease with **Pegasus Mesa Owner, LLC** to add 5,840 square feet to the Premises located at the corner of Sossaman Road ad Velocity Way.

   f) **Resolution No. 21-57 –** Authorizing the Adjustment Amendment to the Master Lease with **Mesa SkyBridge, LLC** to remove 5,840 square feet from the northwest corner of the Property.

g) **Resolution No. 21-58 –** Authorizing the elimination of the maximum daily charge for the **Hourly Parking Lot** effective December 22, 2021.

Consideration and Possible Approval of:

8. **Resolution No. 21-59 –** Authorizing a Memorandum of Understanding with **The Boyer Company**, L.C. to acknowledge the Boyer Company, L.C. as the preferred proposer and establish an exclusive negotiation period and the terms under which PMGAA staff will work to establish a Master Development Agreement with the Boyer Company, L.C.

9. **Resolution No. 21-60 –** Authorizing the Executive Director/CEO and/or delegate to negotiate and execute a final contract for the Airport's Parking Access Revenue Control System (PARCS) Replacement, CIP 998, with **Scheidt & Bachman USA, Inc. (S&B)** for equipment installation and support and maintenance in an amount not to exceed $650,000.

10. **Resolution No. 21-61 –** Authorizing the Executive Director/CEO and/or delegate to negotiate and execute a final contract for the Airport's Parking Access Revenue Control System (PARCS) Replacement, CIP 998, with **SDB, Inc.** for system infrastructure in an amount not to exceed $375,000.

11. **Board Member Comments/Announcements**

12. **Next Meeting: Tuesday, January 18, 2022 at 9:00 a.m.**

13. **Adjournment**

Persons with a disability may request a reasonable accommodation, such as a sign language interpreter, by contacting Misty Johnson at 480-988-7607 or mrjohnson@gatewayairport.com. Requests should be made as early as possible to allow time to arrange the accommodation.

Phoenix-Mesa Gateway Airport

- **Eleven new nonstop destinations added in November**
- **Thanksgiving Holiday travel sets records**
- **New Cell Phone Lot now open**
- **Three hangars being constructed in Gateway Executive Airpark**

Executive Director's Report

December 2021

Financial Snapshot

OPERATING INCOME	October		Month Variance	FYTD Comparison		FYTD Variance
	FY21	FY22		FY21	FY22	
Revenues	$2,309,276	$1,972,579	($336,697)	$7,779,528	$7,747,678	($31,850)
Less Expenses	$1,726,375	$1,710,510	($15,865)	$6,213,081	$7,001,070	$787,989
Operating Income *(before depreciation)*	**$582,901**	**$262,069**	**($320,832)**	**$1,566,447**	**$746,608**	**($819,839)**

Investment Fund Balances: As of October, the Local Governmental Investment Pool (LGIP) 700 = $19,009,199; Wells Fargo; Collateralized Money Market = $329,219 and Collateralized CD's = $42,312,022; Total $61,650,440. The month-over-month decrease was attributable to investment market adjustments of ($101,163). The decrease in market value affected both the LGIP and Collateralized CD's.

Finance and Accounting

Phoenix-Mesa Gateway Airport Authority (PMGAA, Authority) reported a net operating income of $262,069 for October 2021. During the past several years, PMGAA has been focused on the diversification of both aeronautical and non-aeronautical revenue streams. Non-airline revenues – food/beverage/retail concessions, vehicle parking, and rental cars – improved by 55%, reflective of the ongoing improvement in passenger activity. Aviation fuel sales were down during October due to inactivity of the US Forest Service.

Fiscal-year-to-date 2022 (FYTD22), the Authority has accumulated a net operating income of $746,608, compared to $1,566,447 during the same time period last fiscal year. Commercial passenger terminal staffing shortages, limited car rental inventory, reduced aviation fuel sales, and ongoing supply chain issues have all contributed to the reduction in net income.

October 2021 expenditures were less than last year, mainly driven by the management of personnel overtime.

The Authority's federal grant application for American Rescue Plan Act (ARPA) funding has been completed, submitted, and acknowledged as received by the Federal Aviation Administration (FAA). PMGAA's ARPA allocation is $8,222,781.

PMGAA Solicitations

Active/Pending Solicitations

TYPE OF SOLICITATION	Number	Title	Anticipated Contract Award
Request for Proposals	2022-003-RFP	Parking Access Revenue Control System	December 2021
Request for Proposals	2022-001-RFP	Master Developer for Gateway***East***	December 2021

Future Solicitations

TYPE OF SOLICITATION	Number	Title	Scheduled for Release
Request for Qualifications	2022-005-RFQ	Fabrication & Installation of Signs	December 2021
Request for Qualifications	2022-013-RFQ	On-Call Environmental Services	December 2021
Invitation for Bid	2022-004-IFB	Taxiway W Rehabilitation	January 2022

Airport Operations

PMGAA Planning Triennial Full-Scale Emergency Preparedness Exercise

Phoenix-Mesa Gateway Airport (Airport, Gateway Airport), with the support from a number of local, state, and federal partners, is planning a full-scale emergency preparedness exercise for Tuesday, February 22, 2022. This live demonstration requires a simulated emergency designed to evaluate and improve personnel readiness, efficient and effective coordination, and increased communication among all first responders, mutual aid agencies, emergency vehicles, and area hospitals.

Live Drill Participants Receiving Triage

This full-scale exercise, required by the FAA every three years, is a comprehensive test of the regional emergency system, Gateway Airport, and its many partners.

PMGAA would like to thank all of the agencies and organizations participating in next February's live training exercise. We appreciate your support!

2021 Thanksgiving Holiday Sets New Passenger Activity Records

Lots of Activity in the Commercial Passenger Terminal

Gateway Airport has set passenger activity records in three of the last five months. The busy 2021 Thanksgiving Holiday travel period also produced new records. Wednesday, November 24th was the busiest day in the history of the Airport, with 28 departures and more than 4,600 air travelers passing through its doors…until Monday, November 27th when that short-held record was broken again with 31 departures and more than 5,300 passengers.

Gateway Airport is going to be a very busy place this winter!

Operations Statistics

PASSENGER COUNTS		October		% Change	FYTD		% Change
		FY21	FY22		FY21	FY22	
Passengers	**TOTAL**	**104,768**	**131,479**	**25%**	**336,320**	**494,402**	**47%**
	Deplaned	55,081	68,782	25%	172,798	253,097	46%
	Enplaned	49,687	62,697	26%	163,522	241,305	48%
Allegiant	Scheduled	104,557	130,402	25%	335,945	487,077	45%
WestJet	Scheduled	0	0	0%	0	0	0%
Swoop	Scheduled	146	995	582%	146	1,236	747%
Avelo	Scheduled	0	0	0%	0	4,873	100%
Elite/Swift	Charter	65	82	26%	229	1,216	431%

OPERATIONS	October		% Change	FYTD		% Change
	FY21	FY22		FY21	FY22	
Air Carrier	951	1,071	13%	3,509	4,098	17%
Military	348	316	-9%	1,007	1,099	9%
General Aviation	25,182	21,208	-16%	85,900	73,038	-15%
TOTAL	**26,481**	**22,595**	**-15%**	**90,416**	**78,235**	**-13%**

PMGAA Team Member Spotlight

Employee Name: **Brenda Thorek**

Employee Title: **Badging Specialist**

PMGAA Department: **Security, Operations, and Maintenance**

Years with PMGAA: **1**

What are your job responsibilities for PMGAA? I am a Trusted Agent that performs various clerical, administrative, and customer service functions associated with all aspects of badging and credentialing - gathering applicant data, adjudicating, training, appointment scheduling, and issuing badges. I handle all records and updates for the FAA required PMGAA Fuel Handing, Storage, and Dispensing permits. I maintain and update multiple databases and respond to requests for information of both airport and TSA policies.

What is your most memorable Gateway Airport moment? I've been at the Airport just under a year and the people here are just amazing. I've met a variety of folks, Airport staff, TSA, PD & Fire, tenants, and students and they have all been very friendly, encouraging, and welcoming. I have never experienced upper management coming into the office just to say 'Hi!" and get to know me. I really appreciate that, and I love coming to work and I'm very happy to be part of the PMGAA family.

What is something people may not know about you? I worked in the medical field for 15 yrs. I was a R.A.D. (Rape Aggressive Defense) instructor and State Rep for 3 yrs. I taught women to defend/protect themselves. Over 1800 women took the class within my time with the program and I am very proud of that. Outside of work, I like to Scuba dive and sing, not at the same time of course, lol. And I also dabble in resin crafting and painting.

Gateway Aviation Services

During the month of October 2021, Gateway Aviation Services (GAS), the PMGAA owned and operated Fixed Base Operator (FBO), pumped almost 1.5 million gallons of aviation fuel, a 21% decrease compared to last October.

FUEL (Gallons)	October			FYTD		
	FY21	FY22	% Change	FY20	FY21	% Change
AvGas	66,659	44,950	-33%	230,166	153,059	-34%
Retail Jet A	53,233	51,502	-3%	169,083	168,414	0%
Contract	608,677	225,414	-63%	1,917,727	1,058,684	-45%
Commercial	1,142,301	1,158,289	1%	4,008,044	4,343,123	8%
TOTAL	1,870,870	1,480,155	-21%	6,325,020	5,723,280	-10%

Engineering and Planning

Rental Car Facilities to Receive a Much-Needed Upgrade

Layout of new Rental Car Return Lot

Conceptual Design of Rental Car Care Facility

PMGAA is currently underway with two very important infrastructure improvement projects that will immensely improve the rental car operations at Gateway Airport for Enterprise, Alamo, National, and Hertz. The first project is a redesign of the Airport's Rental Car Return Lot. This project will add capacity, improve efficiency, and heighten the customer experience with shade structures and improved signage.

The second project is the renovation of the Rental Car Care Facility. This project will provide new facilities for cleaning rental cars including new covered wash bays and separate vacuum bays. It will also provide upgraded facilities for the scheduled maintenance – lube, oil, and filter changes and tire rotation - of their fleet of vehicles at Gateway Airport.

Both projects will be funded through the Airport's Customer Facility Charge (CFC) account.

Gateway Airport's New Cell Phone Lot is Now Open

Have you ever gone to an airport to pick someone up and driven around and around the airport roadway system waiting for your family member or friend to land, disembark the aircraft, retrieve checked baggage, and make their way to the terminal curb? Airports are not racetracks and vehicles circling them cause unnecessary congestion that is harmful to the environment.

Vehicles Awaiting Passenger Pick Up

Cell Phone Lots are parking lots, typically located in the vicinity of a commercial airport, where people can wait before picking up arriving passengers. These lots reduce roadway congestion and vehicle pollutants by providing a safe and convenient place for people to wait until their party is outside at the terminal curb.

Gateway Airport recently opened a convenient new Cell Phone Lot at the corner of Sossaman and Ray Roads. This location is much more strategic and visible than the old Cell Phone Lot that was located south of the terminal on Sossaman Road. The new lot opened just in time for the busy holiday travel season.

Community Noise Report

During the month of October 2021, PMGAA received aircraft noise calls from a total of 18 area residents, compared to 13 callers during October of last year. The nice weather is here and area residents are opening their window and spending more time outside.

CALLERS	October		FYTD	
	FY21	FY22	FY21	FY22
Total	**13**	**18**	**39**	**48**

AIRCRAFT TYPE	October		FYTD	
	FY21	FY22	FY21	FY22
	Callers	Callers	Callers	Callers
Commercial	5	9	16	33
GA Total	3	1	15	3
Helicopter	0	5	0	5
Military	5	3	8	7
Total	**13**	**18**	**39**	**48**

LOCATION	October		FYTD	
	FY21	FY22	FY21	FY22
Mesa	6	4	13	13
Gilbert	4	12	9	29
Gold Canyon	1	0	7	0
Queen Creek	0	1	5	3
Queen Valley	2	1	4	2
San Tan Valley	0	0	0	0
Apache Junction	0	0	0	1
Chandler	0	0	1	0
TOTAL	**13**	**18**	**39**	**48**

Business Development

Three Hangars Under Construction in the Gateway Executive Airpark

First of Three Hangars Under Construction

Residential growth and corporate relocations to the rapidly expanding Phoenix East Valley has served as a catalyst for increased private investment in the construction of large hangars at Gateway Airport.

One impressive project currently under construction is the Gateway Executive Airpark, a new 185,000 sq. ft. state-of-the-art, full-service hangar complex located at the north end of Gateway Airport's airfield between Textron Aviation's Mesa Service Center and Embraer's Executive Jet Service Center. This exciting private development project includes both multi-tenant and single tenant hangars sized to accommodate larger jets, multiple smaller aircraft, and helicopters.

The first two hangars, totaling approximately 70,000 sq. ft., will be available for lease by the end of the second quarter 2022, the third, totaling 115,.000 sq. ft., is scheduled to be completed in the summer of 2022.

Marketing and Community Relations

New Air Traffic Control Tower Receiving High Marks from Elected Officials

Great strides are being made on Gateway Airport's new air traffic control tower (ATCT, Tower) and local elected officials are getting the opportunity to experience the impressive structure first-hand. PMGAA Engineering & Facilities Director Bob Draper has been leading tours of the new ATCT so the Airport's ownership group – Mesa, Phoenix, Gilbert, Queen Creek, Apache Junction, and the Gila River Indian Community – can check on the important project's progress. Installation of insulated metal exterior panels, HVAC systems, and tempered glass windows in the Tower cab is quickly transforming the second tallest structure in the City of Mesa. The new Tower is scheduled to be completed and commissioned for service in the summer of 2022.

Dueling Silhouettes in the Sunrise

Mesa Officials Tour New Air Traffic Control Tower

Recent Air Service Enhancements at Gateway Airport

- **Amarillo, TX twice weekly**
- **Flint, MI twice weekly**
- **Springfield, IL twice weekly**
- **Tulsa, OK twice weekly**
- **Orange County, CA twice weekly**
- **Spokane, WA twice weekly**
- **Minneapolis, MN twice weekly**
- **Toledo, OH twice weekly**

- **Edmonton, Alberta, Canada twice weekly**
- **Winnipeg, Manitoba, Canada twice weekly**
- **Toronto, Ontario, Canada four times weekly**

- **Calgary, Alberta, Canada twice weekly**

- **Toronto, Ontario, Canada twice weekly**
- **Vancouver, British Columbia, Canada twice weekly**
- **Calgary, Alberta, Canada twice weekly**
- **Edmonton, Alberta, Canada three times weekly**

- **Minneapolis, MN four times weekly**

MINUTES OF PUBLIC MEETING OF THE
PHOENIX-MESA GATEWAY AIRPORT AUTHORITY
BOARD OF DIRECTORS | November 16, 2021

A public meeting of the Phoenix-Mesa Gateway Airport Authority (PMGAA) was convened on Tuesday, November 16, 2021, beginning at 9:00 a.m. in the Board Room (Saguaro A&B) of the Gateway Administration Building, 5835 S Sossaman Road, Mesa, Arizona.

Members Present

Mayor John Giles, Mesa*
Councilmember Jim Waring, Phoenix (*via videoconference*)
Mayor Brigette Peterson, Gilbert
Mayor Chip Wilson, Apache Junction
Lt. Governor Monica Antone, Gila River Indian Community Junction (*via videoconference*)
Mayor Gail Barney, Queen Creek (*via videoconference*)

** Neither present nor represented*

Airport Staff Present

J. Brian O'Neill, Executive Director/CEO
Scott Brownlee, Deputy Director/COO
Chuck Odom, CFO
Misty Johnson, Clerk of the Board
Jill Casson Owen, Attorney

1. **Call to Order** at 9:03 a.m. (Vice Mayor Waring)

2. **Roll Call**

3. **Pledge of Allegiance**

4. **Call to the Public**
   There were no public comments.

5. **Executive Director's Report** J. Brian O'Neill, A.A.E., Executive Director/CEO

   Executive Director O'Neill provided a briefing on PMGAA financial performance, passenger activity, the community noise report, and various Airport projects.
   - Fiscal Year-to-Date (FYTD) Net Operating Income is $484,540.
   - Commercial passenger activity at Phoenix-Mesa Gateway Airport (Airport, Gateway Airport) experienced a 44% increase in passengers over last September. June, July, and September were all record-setting months for passenger activity as leisure travelers return to the skies.
   - On November 9th, Gulfstream Aerospace Corporation (Gulfstream) announced it will be constructing a new West Coast Service Facility at Gateway Airport bringing hundreds of high-wage jobs to the Phoenix East Valley. Phase I is a 225,000 SF facility with an investment of over $70MM. This facility is anticipated to be operational in the latter half of 2023. Beginning in January 2022, Gulfstream will be leasing a large hangar facility on the airport and starting the recruitment process for hiring.
   - In anticipation of the numerous flights being added by Allegiant this winter combined with the return of Flair, WestJet, Swoop, and the new entrance of Sun Country, the Airport has improved the baggage claim facilities, improved the baggage handling facilities, and expanded the security screening check point.

DRAFT

- Three of the past five months have set commercial passenger activity records with 2021 numbers mirroring those set in 2019. With the additional flights being added this winter, the 2021 numbers will likely eclipse 2019 numbers.
- The most recent concession to open in the Airport's passenger terminal is the new Tripadvisor retail/news and gift shop located between gates four and five. Tripadvisor offers expanded snacks and drinks, technology devices, and local Arizona products.
- Gateway***East*** is a 400-acre mixed use non-aeronautical master development opportunity located on the east side of the Airport. The Gateway***East*** Master Developer solicitation continues. The RFQ process had 12 highly qualified submissions. The top four submissions were invited to participate in an RFP process. The interview process was held in September with two finalists selected. The two finalists were asked to present their best and final proposal. Phoenix-Mesa Gateway Airport Authority (PMGAA, Authority) has received those and is in discussion with the preferred developer. A Memorandum of Understanding (MOU) will be presented at the December 21st meeting for the Board's consideration.
- Part 139 airports across the country are required to conduct a full-scale emergency preparedness exercise every three years. On February 22, 2022, Gateway Airport will host the Triennial Full-Scale Emergency Response Exercise.
- The Authority has accelerated the design of a new five-gate terminal addition that will connect to the to the main terminal creating one unified commercial passenger terminal consisting of 11 gates. PMGAA is hoping to secure a grant from the Bipartisan Infrastructure Bill to construct this important project.
- The Air Traffic Control Tower is on-track to be commissioned in the summer of 2022. Tours of the tower are being coordinated with member community Town and City Councils.
- PMGAA is expanding aircraft parking opportunities at the south end of the airfield. Alpha Apron Phase III is under construction with completion anticipated in February 2022. Phase IV is in design and will be ready for construction once Phase III is complete.
- The new Cell Phone Lot at the intersection of Ray and Sossaman Roads is complete. The signs are up directing traffic to the new location.
- The previous Cell Phone Lot is being repurposed into a new parking lot for terminal tenant employees. This important project will free up revenue spaces currently being used by 150 terminal tenant employees in the Daily Parking Lot.
- The Center Runway Reconstruction Design project is going out to bid in May 2022 for the reconstruction of 3,500 SF of concrete on RW 12C-30C. PMGAA is hopeful of securing a grant from the FAA for this important infrastructure project.

6. **Car Rental Return Lot and Car Care Facility Presentation** – Bob Draper, Engineering and Facilities Director
   - Customer Facility Charge (CFC) funds are fees assessed to passengers renting cars at the Airport. The CFC amount is $2.50 per rental day. These funds go into a dedicated account and can only be used to improve the infrastructure and facilities for rental car operations. PMGAA is embarking on two important projects to improve car rental infrastructure at Gateway Airport. The first undertaking is to update and reconfigure the Rental Car Return Lot to improve traffic flow. The second is to improve the Car Care Facility at the south end of the Airport. This facility is where vehicles are maintained, fueled, washed, and vacuumed in preparation for new customers.

7. **Consent Agenda**

   a) **Minutes** of the Board Meeting held on **October 19, 2021.**

   b) **Resolution No. 21-49 –** Authorizing annual changes to the **Airport Rules and Regulations**.

   c) **Resolution No. 21-50 –** Authorizing the purchase of two (2) skid mounted Preconditioned Air Units (PCAir) from **ITW GSE, Inc**. in an amount not to exceed $190,159.44 under CIP 1214.

   d) **Resolution No. 21-51 –** Authorizing the procurement of server equipment from **Dell Marketing, L.P. (Dell)** in an amount not to exceed $72,862.47 in the southeast corner of the Airport, in an amount not to exceed $171,597 under CIP 1237.

Mayor Chip Wilson moved to approve the Consent Agenda.
Mayor Brigette Peterson seconded the motion.
The motion was carried unanimously.

Consideration and Possible Approval of:

8. **Resolution No. 21-52 –** Approving a Professional Services Agreement with **TranSystems Corporation** for Design Services for the Rental Car Care Facility Improvements, in an amount not to exceed $390,532 under CIP 1222 and to approve an increase to the FY22 Capital Budget by this same amount funded through Customer Facility Charges (CFC).

Mayor Brigette Peterson moved to approve Resolution No. 21-52.
Mayor Chip Wilson seconded the motion.
The motion was carried unanimously.

9. **Board Member Comments/Announcements.**

   There were no comments or announcements.

10. **Next Meeting: Tuesday, December 21, 2021** at 9:00 a.m. in the Board Room (Saguaro A&B) of the Gateway Administration Building, 5835 S Sossaman Road, Mesa, Arizona. Members of the Phoenix-Mesa Gateway Airport Authority may attend either in person or by telephone/videoconference.

11. **Adjournment.**
    The meeting adjourned at 9:32 a.m.

Dated this _____ day of _____ 2021.

_____
Misty Johnson, Clerk of the Board

Phoenix-Mesa Gateway Airport Authority
5835 S Sossaman Road
Mesa, Arizona 85212-6014
www.gatewayairport.com

Board Action Item

Re: Resolution 21-53

To:	**Board of Directors**
From:	**Margi EvanSon, Operations & Maintenance Director**
Through:	**Scott Brownlee, Deputy Director/COO**
	J. Brian O'Neill, A.A.E., Executive Director/CEO
Subject:	**CIP#1213 - Sunland Asphalt & Construction, LLC**
Date:	**December 21, 2021**

Proposed Motion
To authorize the purchase of airfield asphalt services with Sunland Asphalt & Construction, LLC for an amount not to exceed $99,770.88.

Narrative
Asphalt age and continuous use have caused deterioration of Taxiway Alpha shoulders. Due to the deteriorating condition of the asphalt on the airfield, which requires periodic maintenance, Taxiway Alpha shoulders require crack-fill, seal, and restriping.

Authorization of the purchase for airfield asphalt services is necessary to reduce FOD, repair deterioration and extend life cycles. The recommended course of action includes crack-fill, seal, and restriping.

Phoenix-Mesa Gateway Airport Authority (PMGAA) is a participant of the Mohave Educational Services Cooperative (MESC) Purchasing Group. Under MESC, Sunland Asphalt & Construction, LLC was awarded Contract #19P-ACE-0318 for asphalt products and services, and it is through this competitive selection that PMGAA will utilize Sunland Asphalt & Construction, LLC for asphalt services. This contract is available upon request.

A quote was obtained utilizing the MESC pricing as noted below:

Taxiway Alpha shoulders	$99,770.88
Total:	$99,770.88

Fiscal Impact
The maintenance expenses were included in the FY22 Capital budget under CIP#1213.

Attachment(s)
Scope of Work, Maps, and Quote

RESOLUTION NO. 21-53

WHEREAS, the Phoenix-Mesa Gateway Airport Authority ("Authority"), a joint powers airport authority formed pursuant to Arizona Revised Statute §28-8521 *et seq.* owns and operates the Phoenix-Mesa Gateway Airport ("Airport"); and

WHEREAS the Authority desires to authorize the purchase of airfield asphalt services with Sunland Asphalt & Construction, LLC for an amount not to exceed $99,770.88.

NOW, THEREFORE, BE IT RESOLVED by the Board of Directors of the Authority as follows:

> **The Board of Directors of the Authority hereby authorizes the purchase of airfield asphalt services with Sunland Asphalt & Construction, LLC for an amount not to exceed $99,770.88. This resolution also authorizes the Chair or Executive Director/CEO to make such additions, deletions, and changes as may be approved by the Chair or Executive Director/CEO, necessary to carry out the purposes and intent of this Resolution.**
>
> Passed and adopted by the Authority this 21st day of December, 2021.

John Giles, Chair

ATTEST:

Misty Johnson, Clerk of the Board

APPROVED AS TO FORM:

Jill Casson Owen, Attorney

PMGAA Tway A Shoulder Pavement Maintenance
Contact: Greg Babin
Meet Point 6283 S Taxiway Circle, Mesa
Scope: Crack fill / Seal (including between conc and asphalt),
2 Coats Spray Seal PMM Sealer with
SUNLAND
ASPHALT

3030 S. 7TH STREET, PHOENIX, AZ 85040
PHONE: 602.323.2800 | WWW.SUNLANDASPHALT.COM

To:	Phoenix Mesa Gateway	**Contact:**	Greg Batin
Address:	5835 S Sossaman Rd	**Phone:**	480-988-7600
	Mesa, AZ 85212 US	**Fax:**	
Project Name:	Phoenix Mesa Gateway	**Bid Number:**	PH010526
Project Location:	6263 S Taxiway Cir, Mesa, AZ	**Bid Date:**	11/3/2021

MOHAVE EDUCATIONAL SERVICE CO-OP BID
CONTRACT NUMBER: 19P-ACE-0318
SPECIAL NOTE:
The terms and conditions of Mohave Educational Services Co-Op Bid, Contract Number 19P-ACE-0318 will prevail over any and all terms and conditions stated in the proposal.

Prices are valid until December 31st, 2021.

Item Description	Estimated Quantity	Unit	Unit Price	Total Price
Crack Seal Provide Traffic Control And Barricades During Our Scope Of Work. Power Clean With High Volume Air As Needed And Seal All Cracks 1/4 Inch And Larger With Crafco PolyFlex III Crack Sealant. (Alligatored Areas Not Included.) This Proposal Is Based On Performing The Work In 7 Phase/Mobilization.	1.00	LS	$37,249.97	$37,249.97
Apply PMM Sealer Provide Traffic Control And Barricades During Our Scope Of Work. Power Sweep/clean Asphalt Surface. Furnish And Apply Two (2) Coats Of PMM Sealer By Spray Application On Approximately 368,548 Square Feet. SealMaster PMM Has 3-5 Lbs. Of Aggregate Per Gallon Blended With 2 Percent Polymer Modified Latex. (Adhesion Or Bonding Of Seal Coat Materials Is Not Warranted In Areas Exposed To Automotive Fluids And/or Other Spills.) This Proposal Is Based On Performing The Work In 4 Phase/Mobilization	1.00	LS	$46,958.24	$46,958.24
Pavement Markings Re-Stripe To Existing 1 Coat Paint With Type 1 Glass Beads. 10,125 LF Of 12 Inch Yellow Transverse Stripes. 4 Mobilizations.	1.00	LS	$10,455.56	$10,455.56

Bid Price Subtotal:	**$94,663.77**
Total City Of Mesa 5.395%:	**$5,107.11**
Total Bid Price:	**$99,770.88**

Notes:

- **Estimated material taxes are included in total price. In order to hold pricing, this proposal must be signed and returned within 30 days from the bid date specified above.**
- **Material pricing is good through 12-31-2021.**
- Pricing excludes night/weekend work, permits, fees, bonds, notifications, QC testing, utility adjustment hardware, gate loops, painting bumper blocks, permanent signage, herbicide, water source, or survey/staking in price unless noted above. Any pre-existing ADA compliance issues are excluded from contract unless specifically stated in proposal.
- Additional (downtime/mobilization) charges may result from delays beyond the control of Sunland Asphalt (or its subcontractors) which prohibit the above mentioned work from being completed as scheduled. (i.e., unmoved vehicles, disregard for Sunland traffic control, sanitation/delivery services, sprinkler runoff, etc.)

ACCEPTED:	CONFIRMED:
The above prices, specifications and conditions are satisfactory and are hereby accepted.	**Sunland Asphalt & Construction, LLC.**
Buyer: _____	
Signature: _____	**Authorized Signature:** _____
Date of Acceptance: _____	**Project Consultant:** Tad Peters

- **Sunland Asphalt Addendum Terms and Conditions:**
  Contractor and Owner hereby accept the terms of the attached Proposal subject to = the terms and conditions set forth in this Addendum. The Proposal and Addendum shall be collectively referred to as the "Contract." This Addendum is attached hereto and incorporated herein by reference. If any of the terms of the Proposal are inconsistent with the terms of this Addendum, then this Addendum shall be controlling and the parties shall be bound by the terms and conditions of this Addendum.
- 1. WORK
  Contractor will furnish all necessary labor, materials, and equipment to complete the work specified in the Contract (the "Work"). All surfaces to which material is to be applied shall be in a condition similar to the condition at the time the project was bid. Owner shall specify one representative to represent the Owner who has authority to accept the Work and authorize changes to the Work. Owner shall provide reasonable access to a water supply source. Owner grants Contractor permission to utilize photos and videos of the Work and the project site in the promotion of Contractor's business services.
- 2. PAYMENT
  Contractor shall be paid a monthly progress payment within 15 days after receipt of the payment by the Owner for the value of work performed. Final payment, including all retention, shall be due 15 days after the work described in the Proposal is substantially completed. No provision of this agreement shall serve to void the Contractor's entitlement to payment for properly performed work.
- 3. INTEREST AND EXPENSES
  All sums not paid when due shall bear an interest rate of 1 1/2% per month or the maximum legal rate permitted by law, whichever is less, and all costs of collection, including a reasonable attorneys' fee, shall be paid by Owner.
- 4. ATTORNEYS' FEES
  In the event of litigation regarding the Contract or collection efforts by Contractor, the prevailing party shall be awarded its reasonable attorneys' fees and costs, which shall include all costs that would normally be passed through to the client, specifically but not limited to research charges, travel costs, expert witness costs, copying costs, mailing costs, facsimile costs, had-delivery costs, Federal Express or Express Mail costs, taxable costs and disbursements.
- 5. CONTINUED PERFORMANCE
  Nothing in this Contract shall require the Contractor to continue performance if timely payments are not made to Contractor for suitably performed work.
- 6. BACK CHARGES
  No back charges or claim of the Owner for services shall be valid except by an agreement in writing by the Contractor before the work is executed, except in the case of the Contractor's failure to meet any requirement of the Contract. In such event, the Owner shall notify the Contractor of such default, in writing, and allow the Contractor reasonable time to correct any deficiency before incurring any cost chargeable to the Contractor.
- 7. WORK AREAS
  Owner is to prepare all work areas so as to be acceptable for Contractor to perform its work under the Contract. Owner shall notify Contractor in advance when the site will be ready for Contractor to perform its work and shall provide Contractor with free and unobstructed access so tehat the work can be commenced promptly and completed without delay. Contractor will not be called upon to start work until sufficient areas are ready to insure continued work.
- 8. TIME FOR PERFORMANCE
  Contractor shall be given a reasonable time in which to commence and complete the performance of the Contract. Contractor provides no assurances as to a complete date since the Work is subject to weather conditions, prior commitments, mechanical failures, and other cause beyond Contractor's control. Contractor shall not be responsible for delays or default where occasioned by any causes of any kind and extent beyond its control, including but not limited to: delay caused by Owner, architect and/or engineers, delays in transportation, shortages of raw materials, civil disorders, labor difficulties, vendor allocations, fires, floods, accident hazardous waste or controlled substances and acts of God. Contractor shall be entitled to equitable adjustment in the contract price for additional costs due to unanticipated project delays or accelerations. Contractor shall not be obligated to provide any labor or materials outside the scope of work unless Owner shall first agree in writing to equitably adjust the contract price to be paid Contractor.
- 9. WORKMANSHIP
  All workmanship and materials are guaranteed against defects for a period of one (1) year from the date of substantial completion of installation. This warranty is in lieu of all other warranties, express or implied, including any warranties of merchantability or fitness for a particular purpose. The exclusive remedy shall be that Contractor will replace or repair any part of its work which is found to be defective. Contractor shall not be responsible for special, incidental or consequential damages. Contractor shall not be responsible for damage to its work by other parties or for improper use of equipment by other industry standard practices and will override strict compliance and strict performance. Contractor makes no warranty regarding drainage where the slope provided or allowable is less than two percent (2%). Contractor's warranty does not extent to or cover settlement or cracking of asphalt or pavement due to expansive soils, improperly compacted utility trenches, or for failures caused by the inadequate compaction of the subgrade. Contractor shall not be liable for damage to underground utilities which were improperly installed and/or backfilled.
- 10. WORK HOURS
  Work called for herein is to be performed during Contractor's regular working hours as agreed to by the Owner and the Contractor.
- 11. NOTICE
  Any notice or written claim required by the Contract to be submitted to the Owner, on account of charges, extras, delays, acceleration, or otherwise, shall be furnished within a time period, and in a manner to permit the Owner to satisfy the requirements of the Contract, notwithstanding any shorter time period otherwise provided.
- 12. LIEN RIGHTS
  Nothing in this Contract shall serve to void Contractor's right to file a lien or claim on its behalf in the event that any payment to Contractor is not timely made.
- 13. LABOR
  Contractor shall not be bound by any of Owner's labor agreements (in whole or in part).
- 14. LIQUIDATED DAMAGES
  The Owner shall make no demand for liquidated damages for delays in any sum in excess of such amounts as may be specifically named in this Contract and no liquidated damages may be assessed against Contractor for more than the amount paid by the Owner for unexcused delays to the event actually caused by the Contractor.

- 15. SCHEDULE
  Contractor shall submit a schedule to Owner, Owner will review and notify Contractor of any schedule conflict. If Contractor finds it necessary to change his schedule, Owner will give his best effort to meet this change in schedule. Contractor shall not be penalized for non-performance and will be paid for work performed.
  .
- 16. INSURANCE RESTRICTION
  Notwithstanding any provision to the contrary, Contractor shall maintain the types and limitations on insurance as shown on the attached certificate of insurance. Contractor is not required to waive any claims or rights of subrogation against the Owner or any others for losses and claims covered or paid by Owner's workers compensation or general liability insurance. Acceptance of the Certificate of Insurance constitutes acceptance of the insurance of Contractor, including any additional insured requirements. In addition, Contractor shall not provide completed operations under an additional insured requirement.
- 17. INDEMNITY, HOLD HARMLESS
  To the fullest extent permitted by law, Contractor agrees to protect, defend, indemnify, and hold harmless Owner from and against all liability, loss, claims, demands, damages, suits, costs, fees, fines, penalties, expenses, and causes of action to the extent caused by Contractor or any of Contractor's employees, agents, representatives, subcontractors, or suppliers. Any indemnification or hold harmless obligation of the Contractor shall extend only to claims resulting to bodily injury and property damage and then only to that part or proportion of any claim damage, loss or defect that results from the negligence or intentional act of Contractor or someone for whom it is responsible. Nothing in this agreement shall require the Contractor to indemnify any other party from any damages including expenses and attorneys' fees to persons or property for any amount exceeding the degree Contractor directly caused such damages. Contractor shall not be responsible for fines or assessments made against Owner and Contractor. Contractor retains all rights of subrogation. Contractor will not indemnify anybody for any actions except for Contractor's own negligence and only in the proportional amount of its negligence.
- 18. RIGHT TO RELY
  Contractor shall rely on plans, drawings, specifications and other information provided by Owner, Owner, Architect or representatives of each. Contractor assumes no risk for unknown or unforeseen conditions not evident from the plans, drawings, specifications or other information provided to Contractor.
- 19. HAZARDOUS WASTE
  Contractor shall have no obligation to handle (that is, to remove, treat or transport) any substance which is considered hazardous waste or substance under state or federal law ("hazardous waste"). Handling hazardous waste shall be outside the scope of work of this Contract. Title to all hazardous waste shall remain with others and shall not be property of Contractor.
  .
- 20. SOILS
  Contractor shall have no liability to Owner or any third-party relating to underlying soil conditions. Contractor will not sacrifice the quality or integrity by placing asphalt pavement on base course or subgrade that is unstable or subgrade containing frost, including top lifts or overlays when temperatures do not meet material specifications. Contractor's warranty shall be waived and have no effect should Owner direct or authorize Contractor to pave on unstable subgrade or subgrade containing frost and Owner shall be responsible for any and all resulting damage or required repairs. If Owner requests that the top lift of asphalt be placed at a later date, the cost for all clean up and remobilization is the Owner's responsibility.
- 21. ENGINEERING SERVICES
  If Contractor provides subcontracted construction stakes and/or subcontracted engineering services, Owner agrees to indemnify and defend Contractor from and against any and all claims, demands, damages, costs or expenses, including attorneys' fees, resulting from or related to these services, including drainage of water as to direction and amount, both during and after performance of the Work. If a soil sterilizer or herbicide is applied by Contractor, it is applied at the request of Owner in an effort to retard weed growth and Contractor makes no representation or guarantee that its use will have the intended effect. Owner shall indemnify, hold harmless, and defend Contractor from and against any and all damages, claims, costs or expenses, including attorneys' fees and costs, resulting from these services. Owner is advised to retain an independent licensed soils engineer for a study of the existing soils in order to recommend a specific pavement design. Contractor may modify the Proposal to include such recommendations.
- 22. AMERICANS WITH DISABILITIES AC
  Owner is solely responsible for maintaining the subject property in full compliance with the ADA and agrees to indemnify and hold Contractor harmless from and against any and all liability, claims, damages or expenses, including attorneys' fees, relating in any way to ADA requirements or issues. Contractor recommends that Owner obtain the services of a certified ADA consultant for site evaluations and recommendations as required by Federal and State law. If directed by the Owner to obtain compliance, Owner may make recommendations for such work and additional charges may apply.
- 23. DISPUTE RESOLUTION
  Final determination of contract compliance and all dispute resolutions shall be handled in the jurisdiction and venue of Maricopa County, Arizona, and be governed by the laws of Arizona.

Twy A Asphalt Shoulder Crack fill, Seal Coat & Stripe
from Twy B3 to Twy N

Phoenix-Mesa Gateway Airport

10/2021

Rev. 2 11/03/2021

Phoenix-Mesa Gateway Airport Authority
5835 S Sossaman Road
Mesa, Arizona 85212-6014
www.gatewayairport.com

Board Action Item

Re: Resolution 21-54

To:	**Board of Directors**
From:	**Shea Joachim, CEcD, Business Development Director**
Through:	**J. Brian O'Neill, A.A.E., Executive Director/CEO**
Subject:	**WestJet Air Carrier Operating Agreement**
Date:	**December 21, 2021**

Proposed Motion
Authorizing the Executive Director to execute an Air Carrier Operating Agreement with WestJet, an Alberta Partnership, for commercial air service at the Airport.

Narrative
WestJet has been operating at Phoenix-Mesa Gateway Airport since 2017 providing service to the Canadian city of Calgary.

The Air Carrier Operating Agreement between the Authority and WestJet outlines the requirements of WestJet for offering commercial passenger service at the Airport, identifies the applicable charges for facilities and services at the Airport, and contractually obligates WestJet to adhere to the Airport's Rules and Regulations and Minimum Standards.

Fiscal Impact
Variable revenues are more difficult to forecast because they are based on passenger activity. However, the Airport anticipates increases in concessionaire revenue, rental car fees, Customer Facility Charges (CFC's), parking fees, Passenger Facility Charges (PFC's) and fuel service charges.

Attachment(s)
Air Carrier Operating Agreement

RESOLUTION NO. 21-54

WHEREAS, the Phoenix-Mesa Gateway Airport Authority ("Authority"), a joint powers airport authority formed pursuant to Arizona Revised Statute §28-8521 *et seq.* owns and operates the Phoenix-Mesa Gateway Airport ("Airport"); and

WHEREAS the Authority desires to authorize the Executive Director to execute an Air Carrier Operating Agreement with WestJet, an Alberta Partnership, for commercial air service at the Airport.

NOW, THEREFORE, BE IT RESOLVED by the Board of Directors of the Authority as follows:

> **The Board of Directors of the Authority hereby authorizes the Executive Director to execute an Air Carrier Operating Agreement with WestJet, an Alberta Partnership, for commercial air service at the Airport. This resolution also authorizes the Chair or Executive Director/CEO to make such additions, deletions, and changes as may be approved by the Chair or Executive Director/CEO, necessary to carry out the purposes and intent of this Resolution.**
>
> Passed and adopted by the Authority this 21st day of December, 2021.

John Giles, Chair

ATTEST:

Misty Johnson, Clerk of the Board

APPROVED AS TO FORM:

Jill Casson Owen, Attorney

Phoenix-Mesa Gateway Airport Authority

Air Carrier Operating Agreement

with

WestJet, an Alberta Partnership

Effective Date: January 1, 2022

TABLE OF CONTENTS

1. PERMITTED ACTIVITIES AND CONDITIONS OF AIRPORT USE. 2
2. TERM. 3
3. EXCLUSIVE & NONEXCLUSIVE RIGHTS. 3
4. RENTALS, FEES AND CHARGES 4
5. REPORTING REQUIREMENTS 5
6. INSURANCE 6
7. DISABLED OR ABANDONED AIRCRAFT. 7
8. ENVIRONMENTAL COMPLIANCE. 8
9. TAXES AND RELATED IMPOSITIONS. 8
10. RULES, REGULATIONS AND MINIMUM STANDARDS. 8
11. DEFAULT: TERMINATION BY PMGAA 9
12. GOVERNING LAW; ATTORNEY'S FEES 10
13. NONWAIVER 10
14. ASSIGNMENT 10
15. OTHER RESTRICTIONS 10
16. AIRPORT SECURITY. 10
17. AIRPORT SECURITY BADGE 10
18. NOTICE. 11
19. PRIOR AGREEMENTS AND PERMITS. 11
20. CORPORATE AUTHORIZATION 11
21. MISCELLANEOUS. 11
22. INCORPORATION OF RECITALS. 13

EXHIBIT A 14
EXHIBIT B 15
EXHIBIT C 16
EXHIBIT D 17

Phoenix-Mesa Gateway Airport Authority
AIR CARRIER OPERATING AGREEMENT

This Air Carrier Operating Agreement (the "Agreement") is executed to be effective the 1st day of January 2022 (the "Effective Date") between the **PHOENIX-MESA GATEWAY AIRPORT AUTHORITY ("PMGAA")**, a joint powers airport authority authorized under the laws of the State of Arizona ("PMGAA"), and **WestJet, an Alberta Partnership.** ("CARRIER"). PMGAA and CARRIER may be referred to collectively as "Parties," and each separately may be referred to as a "Party."

RECITALS:

A. PMGAA is the owner and operator of the Phoenix-Mesa Gateway Airport generally located at the intersection of Ray Road and Sossaman Road, City of Mesa, Maricopa County, Arizona (the "Airport"); and

B., PMGAA has the right to enter into Agreement, license and grant the use of property and facilities on the Airport and has full power and authority to enter into this Agreement in respect thereof; and

C. CARRIER provides commercial airline services, charters, flight crews, aircraft and desires to use the Airport facilities for commercial operations; and

D. CARRIER desires to obtain certain non-exclusive rights to use the common use areas of the passenger terminal, services and privileges in connection with the use of the Airport and its facilities, and PMGAA is willing to grant the same to CARRIER upon the terms and conditions hereinafter stated; and

E. the Parties agree to enter into this Agreement, specifying the rights and obligations of the Parties with respect to the operation of the Airport by PMGAA and the use and/or occupancy of the Airport by CARRIER;

NOW, THEREFORE, for good and valuable consideration, the mutual covenants and conditions herein set forth and the sufficiency of which is agreed to by the Parties, the Parties hereby agree as follows:

1. PERMITTED ACTIVITIES AND CONDITIONS OF AIRPORT USE.

1.1 CARRIER shall have the right to use, in common with others, the passenger terminal, taxiways, runways and air navigational aids of the Airport for the purpose of conducting its FAR Part 129 scheduled international operations, public charter, private charter and the landing and taking off of aircraft incidental thereto, and provided, however, such activities and services are performed in strict accordance with applicable PMGAA Minimum Standards, upon terms and conditions as herein provided.

1.2 RESERVED.

1.3 CARRIER shall not engage in any other commercial or revenue producing activity at the Airport (excluding charter activities by CARRIER, and charter activities requested by PMGAA) without first applying for and receiving written approval for such activity from PMGAA. In the event any other commercial or revenue producing activity is engaged in by CARRIER prior to obtaining such approval, without waiver or limitation of any other remedies available to PMGAA at law or equity, CARRIER hereby agrees to remit to PMGAA the sum equal to TEN PERCENT (10%) of gross billings for such unauthorized activity, plus any expenses incurred by PMGAA in the course of any audit conducted for all of CARRIER's activities.

1.4 CARRIER shall at all times comply with all Federal, State and local laws, ordinances, rules and regulations which are applicable to its operations or the Premises itself (including but not limited to the Americans with Disabilities Act), including all laws, ordinances, rules and regulations adopted after the Effective Date. Carrier shall at all times comply with the Phoenix-Mesa Gateway Airport Authority Rules and Regulations, as the same may be amended from time to time in the Authority's sole and absolute discretion.

2. TERM.

2.1 Subject to earlier termination as provided herein, the term of this Agreement shall be one (1) year, commencing on the Effective Date (the "Term").

2.2 Renewal Term. Provided CARRIER is not then in default of this Agreement, the Term may be extended for one (1) year, without action by the Parties, unless otherwise terminated as provided herein.

2.3 Either Party may terminate this Agreement by providing the notified Party ninety (90) calendar days advance written notice of the terminating Party's intent to do so.

3. EXCLUSIVE & NONEXCLUSIVE RIGHTS.

CARRIER shall have the non-exclusive rights, as applicable, to occupy and use the designated areas of the Airport while in compliance with the terms and conditions of this Agreement. All rights granted to CARRIER under this Agreement are nonexclusive, except as otherwise expressly stated in this Agreement. PMGAA may, in its sole discretion and at any time, permit third parties to conduct any and all business activities at the Airport that PMGAA deems appropriate, or conduct such activities itself, provided that such activities do not require or materially interfere with CARRIER's use of the Airport.

3.1 CARRIER shall not schedule or advertise flight schedules originating from or destined for Phoenix-Mesa Gateway Airport without prior coordination with PMGAA and confirmation from PMGAA of terminal availability.

3.2 Pursuant to PMGAA's Common Use Facilities Operating Procedures (attached as **EXHIBIT C**), CARRIER shall submit a copy of CARRIER's proposed schedule to PMGAA no less than 60 days prior to the schedule effective date. Along with the schedule submission, CARRIER shall include the name and contact information of the individual responsible for setting CARRIER's schedule at the Airport.

3.3 PMGAA shall provide CARRIER with common use of one (1) boarding gate and four (4) ticketing positions. In addition, CARRIER shall have common use access to additional ticket counters, gate hold rooms, and the baggage claim area for scheduled flight operations, the scheduling of such use is subject to the guidelines outlined in PMGAA's Common Use Facilities Operating Procedures. Common use requirements shall be scheduled with PMGAA's Operations & Maintenance department prior to any planned use.

3.4 PMGAA has implemented Common Use Facilities Operating Procedures. PMGAA reserves the right to modify said procedures from time-to-time, as it deems necessary in its sole and absolute discretion and authority to accomplish its purposes. CARRIER shall at all times comply with these operating procedures.

3.5 PMGAA has implemented an Airport Security Program in a form acceptable to the Transportation Security Administration (TSA). PMGAA reserves the right to modify said program from time-to-time, as it deems necessary to accomplish its purposes. CARRIER shall at all times comply with the Airport Security Program and indemnify, defend, hold and save PMGAA, its board members, member governments, officers, officials, employees, and agents free and harmless for, from, and against any violations of said Security Program caused, or alleged to be caused, by the acts, errors or omissions of CARRIER, its employees, agents, invitees or contractors.

3.6 PMGAA shall provide CARRIER with exclusive use of the terminal office space more specifically defined in **EXHIBIT D**.

4. RENTALS, FEES AND CHARGES

4.1 General. Rent for use of any exclusive use space due and payable at the beginning of each month. All other fees are assessed at the time of each use, flight, or service, as applicable, and are due and payable no later than the twentieth (20th) day of the following month in which the use or activity occurred ("Fee Due Date"). CARRIER shall self- report its flight activity monthly to PMGAA pursuant to Section 5. Delinquent rents and fees shall be assessed a finance charge in accordance with Section 4.11.2. Any ground handling services requested of PMGAA or other authorized service provider by Carrier shall be governed by a separate agreement. In any event, CARRIER shall be the responsible party for the purposes of this Air Carrier Operating Agreement, and therefore CARRIER shall pay, or cause to be paid, to PMGAA, the fees and charges as outlined below:

4.2 Landing Fees. CARRIER shall pay a landing fee at a rate equal to the amount reflected on the most current Airport Rates & Charges Schedule at the time of the aircraft operation, for each flight operated by or in conjunction with CARRIER that is subject to a landing fee (as of April 1, 2021 $1.98/1000 lbs. MGLW). The weight used to determine the landing fee for any particular aircraft shall be its maximum certificated gross landing weight (MGLW), as certified by the Federal Aviation Administration.

4.3 Terminal Use Fees. Terminal Use includes ticket counter(s) and lobby area, secure hold room and boarding area podium, aircraft parking position, baggage claim area, and common use computer equipment per flight. CARRIER shall pay PMGAA a Terminal Use Fee in the amount reflected on the most current Airport Rates & Charges Schedule.

4.4 Common Use Set-up and Operating Fees. CARRIER shall pay PMGAA for common use terminal equipment, internet connection, and dark fiber per the most current Airport Rates & Charges Schedule.

4.5 Aircraft Parking Fees. CARRIER shall pay PMGAA a fee per the most recent Airport Rates & Charges Schedule for any aircraft occupying an aircraft parking position, including terminal gates and remote parking positions, for more than three hours; and for any portion of each 24-hour parking period. This fee shall be waived if the aircraft performed a revenue service operation the day prior or will perform a revenue service operation the day after being parked for more than three hours.

4.6 Passenger Facility Charges. CARRIER shall pay monthly to PMGAA, on or before the Twentieth (20th) day of each month (the "PFC Due Date"), a PFC in the amount of Four and 50/100 Dollars ($4.50) for each Enplaned Passenger departing the Airport on an CARRIER Revenue Flight during the previous calendar month. The collection of said fees by CARRIER shall be subject to the terms, conditions and methods of collection set forth in the Aviation Safety and Capacity Expansion Act of 1990, Section 9110, at it now exists or is modified hereafter (the "PFC Act").

4.7 Monthly Tie Down Fees. CARRIER shall pay Monthly Tie Down Fees per Rates and Charges.

4.8 Fueling Fees. CARRIER shall execute a Fueling Service Agreement with PMGAA co-terminous with this Agreement.

4.9 Aircraft Ramp Space and Services. CARRIER shall pay PMGAA monthly for any aircraft line services, out-of-station Aircraft Rescue and Firefighting (ARFF) services, operations safety officers, ground service equipment use, fuel spill response teams and any other space or service requirements as specified in the Airport Rates & Charges Schedule or, if not so specified in that Schedule, as determined by PMGAA (collectively, "Additional Services").

4.10 Other Fees. Unless specified otherwise herein, CARRIER shall pay PMGAA for its usage or rental

of PMGAA equipment and the performance of services by PMGAA within TEN (10) business days of CARRIER's receipt of an invoice (the "Invoice Due Date") for same from PMGAA. The amount of such fees shall be as provided by separate agreement between CARRIER and PMGAA, or, in the absence of such agreement, as specified in the most current Airport Rates and Charges Schedule or Airport Fees, Services & Rental Rates in effect when the charge or fee was incurred. Failure to remit payment by the Invoice Due Date may result in the suspension of further equipment rentals or services until payment is made to PMGAA in full.

4.11 Requirements. With regard to the fees and charges specified in this SECTION 4, the following conditions and considerations shall apply:

4.11.1 Airport Rates & Charges Schedule. The Airport Rates & Charges Schedule and Airport Fees, Services and Rental Rates referred to in this Agreement may be revised from time to time. CARRIER shall pay the most current fee(s) at the time of the event or service, as applicable, unless specifically outlined in this Agreement. The current Airport Rates & Charges Schedule and the Airport Fees, Services and Rental Rates are attached as **EXHIBIT A** and is subject to change without prior notice or approval of CARRIER.

4.11.2 Finance Charges and Late Fees. If CARRIER fails to pay any charge due and owing to PMGAA in full on or before Fee Due Date, Invoice Due Date, PFC Due Date, as applicable, CARRIER shall be responsible for interest on the unpaid fee or charge at the rate of EIGHTEEN PERCENT (18%) per annum from the due date until payment in full is made. In addition, in the event any payment is received more than TEN (10) days after the applicable due date, a late penalty of TEN PERCENT (10%) of the amount of such delinquent amount shall be due and payable in addition thereto.

4.11.3 Books and Records. CARRIER shall maintain permanent books, records and ledgers accurately reflecting the total passengers, and total number of monthly aircraft landings for all aircraft subject to a landing fee indicating the make, type (including model designation), registration number, maximum certificated gross landing weight, and arrival and departure time of each aircraft involved. These records shall be made available to PMGAA upon request. PMGAA may audit the books, records and ledgers maintained by CARRIER in accordance with this SECTION 4. In the event an audit reveals a deficiency of TWO PERCENT (2%) or greater in the amount of payment made pursuant to this SECTION 4, CARRIER shall not only pay such deficiency but also the cost of any audit performed by PMGAA.

5. REPORTING REQUIREMENTS

5.1 CARRIER shall file with PMGAA written reports for the items specified below no later than the TENTH (10th) day of the calendar month following the month in which the specified activities occurred . Such reports shall cover all of CARRIER's Airport activities during said month, and include activity handled by CARRIER for other Air Transportation Companies not having an agreement with PMGAA providing for its own submission of activity data to PMGAA.

5.1.1 A complete listing of all of CARRIERS's actual aircraft landings at the Airport, including aircraft type and MGLW; and a listing, by destinations, of the number of flights that qualify under applicable waiver agreements for any landing fee waivers;

5.1.2 A complete listing of CARRIER's Enplaned Passengers and Deplaned Passengers, specified by and including the type of aircraft;

5.1.3 A complete listing, by date and flight number, of CARRIER's commercial cargo loaded and off loaded.

5.2 PMGAA shall have the right to rely on said activity reports in determining rentals and other charges due hereunder; provided, however, CARRIER shall have full responsibility for the accuracy of said reports. Payment deficiencies due to incomplete or inaccurate activity reports

shall be subject to interest charges as set forth in SECTION 4.11.2 herein.

5.3 CARRIER shall at all times maintain and keep books, ledgers, accounts or other records wherein are accurately kept all entries reflecting the activity statistics to be reported pursuant to SECTION 5. Such records shall be retained by CARRIER for a period of THREE (3) years subsequent to the activities reported therein, or such other retention period as set forth in 14 CFR Part 249.7, and made available at Mesa, Arizona for audit and/or examination by PMGAA or its duly authorized representative during all normal business hours. CARRIER shall produce such books and records at Mesa, Arizona within THIRTY (30) calendar days of PMGAA's notice to do so or pay all reasonable expenses, including but not limited to, transportation, food, lodging and other related expenses, necessary for an auditor selected by PMGAA to audit said books and records.

5.4 The cost of audit, with the exception of the aforementioned expenses, shall be borne by PMGAA; provided, however, the total cost of said audit shall be borne by CARRIER if either or both of the following conditions exist:

5.4.1 The audit reveals an underpayment of more than TWO PERCENT (2%) of rentals, fees and charges due hereunder, as determined by said audit; and/or

5.4.2 CARRIER has failed to maintain true and complete books, records, accounts and supportive source documents in accordance with SECTION 5.

5.5 All payments due and payable hereunder shall be paid in lawful money of the United States of America, without set off, by check made payable to the Phoenix-Mesa Gateway Airport Authority and delivered to:

Phoenix-Mesa Gateway Airport Authority
Attn.: Accounts Receivable
5835 S. Sossaman Road
Mesa, Arizona 85212-0614

6. INSURANCE

6.1 General. Carrier shall procure and maintain the following types and amounts of insurance for its operations at the Airport throughout the Term of this Agreement and any extension thereto:

Aircraft Liability insurance covering third party bodily injury and property damage, and passenger and contractual liabilities which shall protect and indemnify PMGAA from any and all claims arising in connection with aircraft movement on the Airport in amounts as are customarily carried by a carrier of like kind and size, but in no event less than $250,000,000.00 per occurrence. Such insurance shall also insure against third party liabilities arising from War Risk perils.

Airport Premises Liability insurance third party bodily injury and property damage, including coverage for "premises/operations," "products and completed operations," "host liquor" and "blanket contractual" liabilities in an amount not less than $250,000,000.00 per occurrence.

Comprehensive Automobile Liability insurance for all owned, non-owned and hired vehicles operated airside on the Airport that are assigned to or used in the performance of commercial activities in the amount of $25,000,000.00 per occurrence or combined single limit. If any hazardous materials are transported in conjunction with Carrier's business operations at or on the Airport, an MSC 90 endorsement shall be required in addition thereto.

Workers' Compensation insurance, as required by law, and *Employer's Liability* insurance in the amount of $1,000,000.

6.2 Additional Insurance. At any time during the Term of this Agreement, including any extension thereto, PMGAA may, in its reasonable determination decide that the insurance coverage required by this SECTION 6 is no longer adequate, require CARRIER to increase its coverage to commercially reasonable amounts.

6.3 Blanket Insurance. CARRIER's insurance obligations under this Agreement may be satisfied by means of the general corporate "blanket" policies carried by it and evidenced by the insurance carrier's standard certificates thereof.

6.3.1 Use of Proceeds. Proceeds of any liability and property damage insurance required under this SECTION 6 shall be applied toward extinguishing, satisfying or remedying the liability, loss or damage with respect to which such proceeds may be paid.

6.4 Indemnity. To the fullest extent permitted by law CARRIER (as "indemnitor") shall indemnify, defend, hold and save PMGAA, its board members, and its member governments, officers, officials, employees, and agents (as "indemnitee") free and harmless of, for, from and against any and all Losses caused in whole or in part by (a) any act or omission of CARRIER (including indemnitor's officers, officials, agents, employees, contractors or invitees), (b) CARRIER's operations at the Airport, (c) CARRIER's violations of said Security Program caused, or alleged to be caused, by the acts, errors or omissions of CARRIER, its employees, agents, invitees or contractors, or (d) any default by CARRIER hereunder. This indemnification shall exclude responsibility for any consequential damages and for claims to the extent arising by reason of the negligent or wrongful act of PMGAA or its employees, contractors or agents. For purposes hereof "Losses" shall mean any and all losses, liabilities, judgments, suits, claims, damages, fines, penalties, costs and expenses (including reasonable attorneys and consultant fees, investigation costs, monitoring costs, remediation costs, and court costs), of any kind or nature." In carrying out the defense of any claim subject to its indemnification obligations hereunder, CARRIER shall use counsel reasonably acceptable to PMGAA.

6.6 Insurance Form. Each insurance policy obtained pursuant to this SECTION 6, except for Workers' Compensation and Employer Liability policies, shall: (i) name PMGAA as a certificate holder or an additional insured to the extent of Operator's contractual indemnity obligations; (ii) contain a provision that written notice of cancellation or modification thereof shall be given to PMGAA not less than THIRTY (30) calendar days before such cancellation or modification takes effect (TEN (10) days in the case of nonpayment of premium); and (iii) contain a waiver of subrogation in favor of PMGAA. Operator shall not permit any insurance policy to be canceled or modified without PMGAA's written consent unless equivalent replacement policies are issued with no lapse in coverage. All policies shall be obtained from insurance companies licensed to do business in the State of Arizona and possessing a rating of at least A - VII or higher from the A.M. Best Company, or an equivalent rating approved by PMGAA.

7. DISABLED OR ABANDONED AIRCRAFT.

7.1 Removal of Disabled Aircraft. Should any aircraft owned or operated by CARRIER, through accident or for any other reason, become disabled or be abandoned in any area which could interfere with the continuous, normal operations of any of the runways, taxiways and airfield facilities at the Airport, CARRIER shall, at CARRIER'S sole cost and expense:

7.1.1 Immediately remove said aircraft to such location as may be designated by PMGAA, unless such aircraft is required to remain in place pending investigation by the appropriate regulatory agency or agencies of the federal government; and

7.1.2 In the event of any accident where federal investigation in place is required, immediately upon receiving clearance to do so from the appropriate federal agency, remove said aircraft and any wreckage or debris resulting therefrom to the area(s) designated by said federal agency authorizing such removal; otherwise, such aircraft wreckage and debris shall be immediately removed from the Airport or stored at a location approved by PMGAA.

7.2 Failure to Remove Disabled Aircraft. Should CARRIER fail to proceed immediately to remove disabled aircraft, or should aircraft owned or operated by CARRIER be abandoned on the Airport, PMGAA shall have the right to remove such aircraft by any means PMGAA deems necessary under the circumstances, and CARRIER shall, to the fullest extent permitted by law, indemnify, defend, keep and hold PMGAA, its members, board of directors, officers, agents, officials, servants,

employees and contractors harmless from and against any and all claims, costs, loss, liability, actions, suits, proceedings, damage or expense (including costs of suit and attorneys' fees and expenses) incurred by PMGAA or claimed by anyone by reason of removal of said aircraft, injury to persons or property or damages to such aircraft caused by such removal, as well as storage costs therefor. CARRIER shall reimburse PMGAA for any costs incurred by PMGAA in removing and storing any aircraft, at PMGAA's sole discretion, and as provided herein in performing authorized maintenance on its aircraft on the Airport.

7.3 Sound and Noise Suppression. CARRIER shall comply fully with Airport Rules & Regulations and Minimum Standards when performing high-speed engine test operations at the Airport, if any, and SECTION 10.3 to mitigate excessive ambient sound and/or noise that may be generated incident thereto and that have or may have an adverse effect on other Airport tenant operations and the surrounding community. CARRIER acknowledges and agrees that the Airport Rules & Regulation for such test operations may change from time to time at PMGAA's sole and absolute discretion. CARRIER also agrees that any costs associated with compliance with Airport Rules & Regulations for sound or noise suppression or mitigation shall be borne solely by CARRIER.

8. ENVIRONMENTAL COMPLIANCE.

CARRIER shall at all times during the existence of this Agreement promptly observe and comply with applicable Federal, State, and local laws, regulations, rules and standards concerning the environment (collectively, the "Environmental Laws"). CARRIER shall be responsible for collecting, storing, recycling and/or disposing of its hazardous or toxic waste, if any, in compliance with the Environmental Laws governing the storage and disposal of hazardous or toxic waste. CARRIER shall ensure its employees and agents are aware that domestic drains, storm drains, or industrial waste drains shall not be used to dispose of gasoline, hydraulic fluid, solvents, concentrated cleaning agents or any other hazardous or toxic materials. Where so required, PMGAA may act on behalf of CARRIER, as and if appropriate, to dispose of CARRIER's waste, sign manifests on behalf of CARRIER and assign such disposal to CARRIER's EPA identification (ID) number. CARRIER shall repay PMGAA the costs and fees for doing so within TEN (10) days of demand therefor. CARRIER shall, to the fullest extent permitted by law, indemnify, defend and hold PMGAA, its members, board of directors, officers, agents, officials, employees, and contractors harmless from and against any and all claims, costs, loss, liability, actions, suits, proceedings, damage or expense including, but not limited to, the costs of suit and reasonable attorneys' fees and expenses of any nature whatsoever arising out of or related to CARRIER's failure to comply with the Environmental Laws.

9. TAXES AND RELATED IMPOSITIONS.

In the event any governmental authority shall impose a tax or imposition based upon this Agreement, upon CARRIER or its aircraft, or upon payments to be made hereunder, CARRIER shall pay such amounts either to PMGAA or the appropriate governmental authority on or before any delinquency date. Specifically, CARRIER shall be responsible for any transaction privilege, sales, excise or other similar tax except income taxes as a result of this Agreement. CARRIER shall also pay all licensing or permitting fees necessary or required by law for the conduct of its aeronautical operations hereunder, or any other matters hereunder. CARRIER shall be responsible for any property interests created hereunder, which may constitute or be deemed to be a possessory interest for purposes of taxation.

10. RULES, REGULATIONS AND MINIMUM STANDARDS.

10.1 CARRIER shall at all times comply with all federal, State and local laws and ordinances, rules and regulations, which are applicable to its operations, or the operation, management, maintenance, or administration of the Airport, including but not limited to the Americans with Disabilities Act, and all laws, ordinances, rules and regulations adopted after the Effective Date. CARRIER shall at all times comply with all Airport Rules and Regulations, and Minimum Standards established by PMGAA regarding operation and maintenance of the Airport, copies of which are attached as **EXHIBIT B** and are incorporated herein. CARRIER will be responsible for controlling and preventing disruptive pedestrian and vehicle traffic, if any, associated with its activities on the Airport. CARRIER also shall display or provide copies to PMGAA of any permits,

licenses, or other evidence of compliance with laws upon request.

10.2 PMGAA shall operate the Airport in compliance with all applicable Federal state and local laws, ordinances, rules and regulations, and shall enforce the Airport Rules and Regulations established by it to ensure the effective and orderly operation of the Airport, and to prevent any disruption caused by CARRIER's operations at and on the Airport.

10.3 CARRIER acknowledges receipt of and agrees to abide by PMGAA's *Fly Friendly* noise abatement procedures and will provide such information to flight crews and/or students, post the information in CARRIER's flight planning area, and use the procedures to the extent possible when consistent with safety and air traffic control directives.

11. DEFAULT: TERMINATION BY PMGAA

11.1 General Grounds. PMGAA may terminate this Agreement upon the occurrence of any of the following events:

11.1.1 Failure of CARRIER to perform any of its obligations under this Agreement, or any other contract, license or agreement between the Parties, which failure shall not be cured within FIVE (5) business days after delivery by PMGAA **to** CARRIER of a written notice of such failure.

11.1.2 The filing of any lien against the Airport because of any act or omission of CARRIER which is not discharged within FIVE (5) business days of receipt of actual notice of such lien by CARRIER.

CARRIER may terminate this Agreement upon the occurrence of any of the following events:

11.1.3 Failure of PMGAA to perform any of its obligations under this Agreement, or any other contract, license or agreement between the Parties, which failure shall not be cured within FIVE (5) business days after delivery by CARRIER **to** PMGAA of a written notice of such failure.

11.1.4 The filing of any lien against the CARRIER because of any act or omission of PMGAA which is not discharged within FIVE (5) business days of receipt of actual notice of such lien by PMGAA.

11.2 Failure to Pay Fees. PMGAA may declare CARRIER in default of this Agreement by giving CARRIER FIVE (5) business day's written notice of CARRIER's failure to timely pay any fees or payments due pursuant to this Agreement. If CARRIER fails to cure such payment default within said FIVE (5) business day period, PMGAA may, in its sole discretion, elect to do any one or more than one of the following:

11.2.1 Institute action(s) to enforce this Agreement; or

11.2.2 Terminate this Agreement automatically without further notice to CARRIER; or

11.2.3 Exercise any other remedy allowed by law or equity.

11.3 Failure to Provide Insurance. In the event CARRIER at any time fails to maintain all insurance coverage required by this Agreement, PMGAA shall have the right, upon written notice to CARRIER, **to** immediately terminate this Agreement or secure the required insurance at CARRIER's expense.

11.4 No Waiver by PMGAA. No waiver by PMGAA of any default by CARRIER in the performance of its obligations under this Agreement shall be deemed to be a waiver of any subsequent default by CARRIER in the performance of any such obligations.

12. GOVERNING LAW; ATTORNEY'S FEES.

The laws of the State of Arizona shall govern this Agreement and the matters set forth therein, without regard to its conflict of law principles. Venue of any action brought under this Agreement shall, at the option of PMGAA, lie in Maricopa County, Arizona. In the event of any litigation or arbitration between PMGAA and CARRIER arising under this Agreement, the successful party shall be entitled to recover its attorney's fees, expert witness fees and other costs incurred in connection with such litigation or arbitration.

13. NONWAIVER.

PMGAA's right to revoke this Agreement shall be absolute. Any election by PMGAA to not enforce any provision of this Agreement, or any failure by PMGAA to exercise any of the remedies allowed PMGAA under this Agreement, shall not operate as a waiver by PMGAA of any of its right hereunder.

14. ASSIGNMENT.

CARRIER shall not assign or transfer any right or interest in this Agreement.

15. OTHER RESTRICTIONS.

CARRIER shall comply with all rules, laws, ordinances, and statues of any governmental authority having jurisdiction over the Airport or the matters provided in this Agreement.

16. AIRPORT SECURITY.

PMGAA maintains an approved Airport Security Plan (the "Security Plan") pursuant to 49 CFR Parts 1540 and 1542. CARRIER shall at all times comply with the Security Plan and the written and verbal directives issued by PMGAA supporting the Security Plan.

16.1 CARRIER shall immediately correct physical or procedural deficiencies which are contrary to the Security Plan, security directives, security bulletins, or verbal notifications existing now or in the future. CARRIER is responsible for maintaining security practices, facilities, and perimeter boundaries on their leasehold that meet the security standards of the Security Plan.

16.2 CARRIER shall, to the fullest extent permitted by law, indemnify, defend, and hold PMGAA harmless for, from, and against any violations of the Security Plan committed by any agents, employees, invitees, subcontractors, or independent contractors of CARRIER.

16.3 CARRIER shall conduct and document all self-audits and self-inspections as required by the Transportation Security Administration ("TSA") or PMGAA and make such audits available for inspection.

16.4 CARRIER shall designate a primary security coordinator to receive security -related briefings, bulletins, and sensitive security information ("SSI").

16.5 PMGAA reserves the right to modify the Security Plan from time-to-time, as necessary, or as directed by the TSA.

17. AIRPORT SECURITY BADGE

17.1 Carrier employees/contractors that require a badge shall be obligated to complete all training and comply with all security requirements and directives issued by PMGAA, TSA, or other entities having jurisdiction at PMGAA.

17.2 CARRIER and employees/contractors shall comply with all security-related audits, inspection, and screenings conducted by PMGAA.

17.3 CARRIER will immediately notify PMGAA and promptly return badges to the Airport Badging Office when badge holders terminate employment, the badge is no longer needed, or the employee/contractor is on extended leave.

17.4 Misuse of a badge or security procedures will bring about punitive action including suspension or revocation of one or all badges.

18. NOTICE.

18.1 All notices required or permitted under this Agreement shall not be deemed effective unless personally delivered or mailed by certified mail, return receipt requested, postage prepaid, or by reputable commercial overnight courier service, to the following addresses:

TO PMGAA:	Phoenix-Mesa Gateway Airport Authority Attn.: Business Development Department 5835 S. Sossaman Road Mesa, Arizona 85212-0614
TO CARRIER:	WestJet, an Alberta Partnership. Attn: Vice President, Airports 22 Aerial Place NE Calgary, Alberta T2E 3J1

18.2 Notices shall be deemed to have been received TWO (2) business days after the date of mailing, if given by certified mail, or upon actual receipt if personally delivered or if given by reputable commercial overnight courier service. Any Party may designate in writing a different address for notice purposes pursuant to this SECTION.

19. PRIOR AGREEMENTS AND PERMITS.

Upon execution hereof, this Agreement shall supersede and cancel any prior air carrier operating agreements between PMGAA and CARRIER with respect to the business activities governed hereby. CARRIER shall not construe PMGAA's execution of this Agreement as a waiver of any prior indebtedness or obligation to PMGAA under any prior agreement or license, nor does PMGAA waive any claim or cause of action arising therefrom.

20. CORPORATE AUTHORIZATION.

In executing this Agreement, CARRIER represents and warrants to PMGAA that if CARRIER is a corporation, CARRIER has obtained and been granted the full right, power and authority to enter into this Agreement.

21. MISCELLANEOUS.

21.1 Personal Liability. No member of or employee of either Party shall be charged personally or held contractually liable by or to the other Party under any term or provision of this Agreement because of any breach thereof or because of its execution or attempted execution.

21.2 No Waiver. No provision of this Agreement may be waived or modified except by a writing signed by the Party against whom such waiver or modification is sought.

21.3 Non-Waiver of Rights. No waiver or default by PMGAA of any of the terms, conditions, covenants or agreements hereof to be performed, kept or observed by CARRIER shall be construed or act as a waiver of any subsequent default of any of the terms, covenants, conditions or agreements herein contained to be performed, kept or observed by CARRIER, and PMGAA shall not be restricted from later enforcing any of the terms and conditions of this Agreement.

21.4 Amendment. Only a written instrument executed by the Parties may amend this Agreement.

21.5 Invalid Provisions. Should any provision of this Agreement or any application thereof be held invalid by a court of competent jurisdiction, the remainder of this Agreement shall not be affected thereby, unless one or both Parties would be substantially and materially prejudiced.

21.6 Headings. The headings contained herein are for convenience in reference only and are not intended to define or limit the scope of this Agreement or any term thereof.

21.7 Entire Agreement. This Agreement, including **EXHIBITS** attached hereto at the time of its execution, constitutes the entire agreement between the Parties hereto and supersedes all prior

negotiations, understandings and agreements between the Parties concerning such matters.

22. INCORPORATION OF RECITALS.

The recitals set forth above are acknowledged by the Parties to be true and correct and are incorporated herein by this reference.

IN WITNESS WHEREOF, the Parties have executed this Agreement to be effective on the Effective Date specified above.

FOR PMGAA:	FOR CARRIER:
_____	_____
By: J. Brian O'Neill, A.A.E	By:
Its: Executive Director/CEO	Its:
Date Signed: _____	Date Signed: _____

EXHIBIT A

Airport Rates & Charges Schedule

https://www.gatewayairport.com/Documents/DocumentLibrary/Airport%20Rates%20and%20Charges/Airport%20Rates%20and%20Charges%20effective%2010-1-21.pdf?Uniqueifier=xgiWiMKxRE

Airport Fees, Services & Rental Rates

https://www.gatewayairport.com/Documents/DocumentLibrary/ExecDirSect/Airport%20Fees,%20Services%20and%20Rental%20Rates%20Effective%209-1-2021.pdf?Uniqueifier=wdMkLlbmKt

EXHIBIT B

PMGAA Minimum Standards

https://www.gatewayairport.com/Documents/DocumentLibrary/Board%20Policies/Airport%20Minimum%20Standards.pdf?Uniqueifier=I1LiWMdx3u

PMGAA Rules & Regulations

https://www.gatewayairport.com/Documents/DocumentLibrary/Board%20Policies/Airport%20Rules%20and%20Regulations_21-49.pdf?Uniqueifier=luBKRX6J4r

EXHIBIT C

Common Use Facilities Operating Procedures:

https://www.gatewayairport.com/Documents/DocumentLibrary/Regulatory%20Documents/Record_PMGAA_CUSE%20Procedures%2021-01%2020211110.pdf?Uniqueifier=f6qvpcjmhk

EXHIBIT D

EXCLUSIVE USE AREAS AND FEES[1]

6033-1 S. Sossaman Road, Suite 203	116 sf @ $34.00/sf/yr.	$328.66/mo.

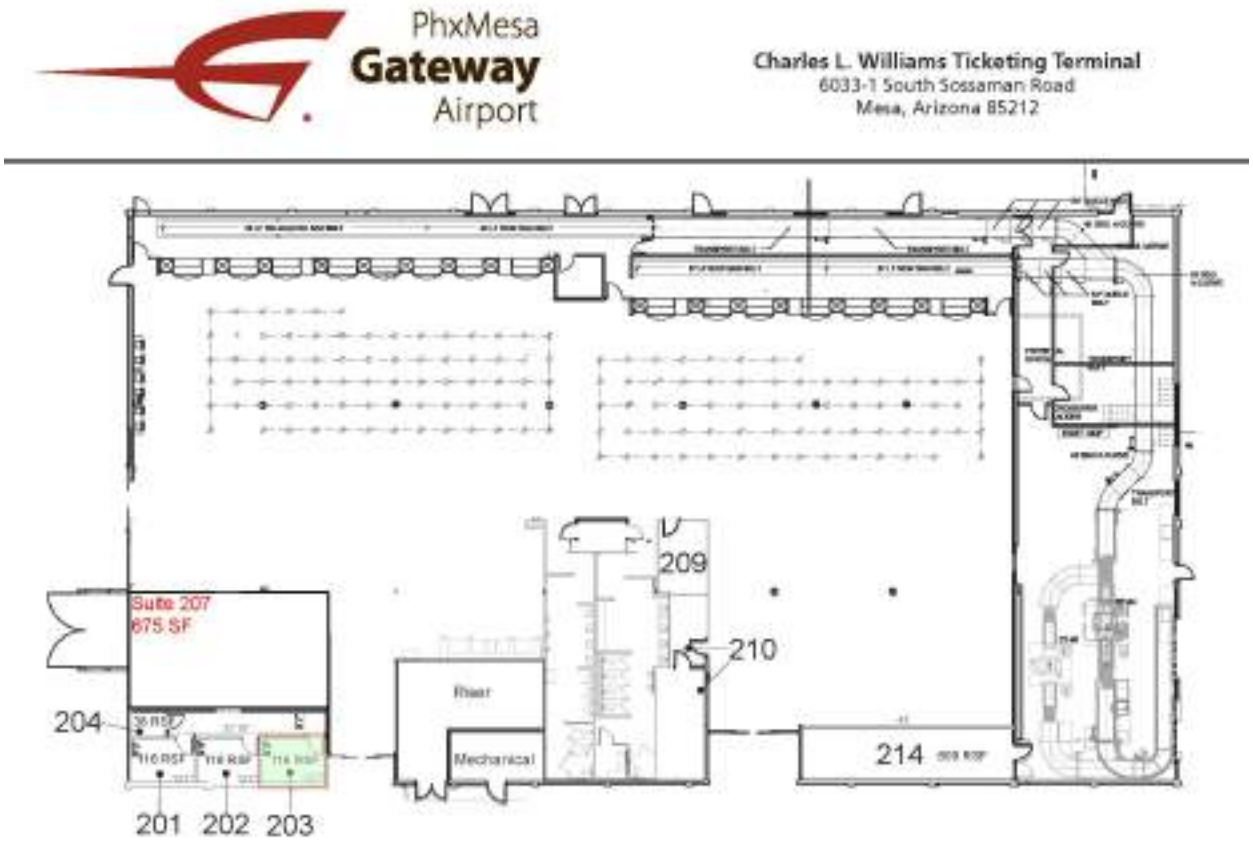

NOTES:

[1] Plus applicable taxes.

Phoenix-Mesa Gateway Airport Authority
5835 S Sossaman Road
Mesa, Arizona 85212-6014
www.gatewayairport.com

Board Action Item

Re: Resolution 21-55

To: Board of Directors
From: Shea Joachim, CEcD, Business Development Director
Through: J. Brian O'Neill, A.A.E., Executive Director/CEO
Subject: Allegiant Air Carrier Operating Agreement
Date: December 21, 2021

Proposed Motion

To approve a new one-year Air Carrier Operating Agreement with Allegiant Air, LLC

Narrative

Allegiant Air, LLC ("Allegiant"), a wholly-owned subsidiary of Allegiant Travel Company, currently provides commercial passenger transportation services to more than 40 domestic destinations at Phoenix-Mesa Gateway Airport ("Airport"). Allegiant's operation at the Airport is governed and guided by an Air Carrier Operating Agreement that specifies exclusive, preferential, and non-exclusive rights to facilities and infrastructure; as well as establishes associated operating costs.

This new one-year agreement accomplishes several important goals:

- Maintains and promotes a low-cost operating structure for Allegiant at the Airport
- Allocates additional facilities for Allegiant's preferential use.
- Encourages and rewards future growth at the Airport by Allegiant through a defined incentive and non-airline revenue sharing program
- Preserves and enhances an operating environment at the Airport that provides Allegiant unparalleled efficiency and convenience

Fiscal Impact

The Airport receives revenue from Allegiant through facility leases; aircraft landing and parking fees; terminal and terminal equipment use fees; and fuel storage/upload fees. The Airport also receives revenue from Allegiant's customers for vehicle parking and other ground transportation services; food/beverage/retail purchases; Passenger Facility Charges (PFC); Customer Facility Charges (CFC); and Federal Aviation Administration (FAA) Airport Improvement Program (AIP) Entitlement Grants.

Attachment(s)

Air Carrier Operating Agreement

RESOLUTION NO. 21-55

WHEREAS, the Phoenix-Mesa Gateway Airport Authority ("Authority"), a joint powers airport authority formed pursuant to Arizona Revised Statute §28-8521 *et seq.* owns and operates the Phoenix-Mesa Gateway Airport ("Airport"); and

WHEREAS the Authority desires to approve a new one-year Air Carrier Operating Agreement with Allegiant Air, LLC.

NOW, THEREFORE, BE IT RESOLVED by the Board of Directors of the Authority as follows:

> **The Board of Directors of the Authority hereby approves a new one-year Air Carrier Operating Agreement with Allegiant Air, LLC. This resolution also authorizes the Chair or Executive Director/CEO to make such additions, deletions, and changes as may be approved by the Chair or Executive Director/CEO, necessary to carry out the purposes and intent of this Resolution.**
>
> Passed and adopted by the Authority this 21st day of December, 2021.

John Giles, Chair

ATTEST:

Misty Johnson, Clerk of the Board

APPROVED AS TO FORM:

Jill Casson Owen, Attorney

Phoenix-Mesa Gateway Airport Authority

Air Carrier Operating Agreement

with

Allegiant Air, LLC

Effective Date: January 1, 2022

TABLE OF CONTENTS

1. PERMITTED ACTIVITIES AND CONDITIONS OF AIRPORT USE. 3
2. TERM. 4
3. EXCLUSIVE PREFERENTIAL, AND NONEXCLUSIVE RIGHTS. 4
4. RENTALS, FEES AND CHARGES 5
5. REPORTING REQUIREMENTS 6
6. INSURANCE 7
7. DISABLED OR ABANDONED AIRCRAFT. 8
8. ENVIRONMENTAL COMPLIANCE. 9
9. TAXES AND RELATED IMPOSITIONS. 9
10. RULES, REGULATIONS AND MINIMUM STANDARDS. 10
11. DEFAULT: TERMINATION BY PMGAA 10
12. GOVERNING LAW; ATTORNEY'S FEES 11
13. NONWAIVER 11
14. ASSIGNMENT 11
15. OTHER RESTRICTIONS 11
16. AIRPORT SECURITY. 11
17. AIRPORT SECURITY BADGE 12
18. NOTICE. 12
19. PRIOR AGREEMENTS AND PERMITS. 12
20. CORPORATE AUTHORIZATION 12
21. MISCELLANEOUS. 12
22. INCORPORATION OF RECITALS. 13

EXHIBIT A 14
EXHIBIT B 15
EXHIBIT C 16
EXHIBIT D 17
EXHIBIT E 18

PHOENIX-MESA GATEWAY AIRPORT AUTHORITY
AIR CARRIER OPERATING AGREEMENT

This Air Carrier Operating Agreement (the "Agreement") is executed to be effective the 1st day of January 2022 (the "Effective Date") between the **PHOENIX-MESA GATEWAY AIRPORT AUTHORITY** ("PMGAA"), a joint powers airport authority authorized under the laws of the State of Arizona ("PMGAA"), and **ALLEGIANT AIR, LLC** ("CARRIER"). PMGAA and CARRIER may be referred to collectively as "Parties," and each separately may be referred to as a "Party."

RECITALS:

A. PMGAA is the owner and operator of the Phoenix-Mesa Gateway Airport generally located at the intersection of Ray Road and Sossaman Road, City of Mesa, Maricopa County, Arizona (the "Airport"); and

B. PMGAA has the right to enter into Agreement, license and grant the use of property and facilities on the Airport and has full power and authority to enter into this Agreement in respect thereof; and

C. CARRIER provides commercial airline services, charters, flight crews, aircraft and desires to use the Airport facilities for commercial operations; and

D. CARRIER desires to obtain certain non-exclusive rights to use the common use areas of the passenger terminal, services and privileges in connection with the use of the Airport and its facilities, and PMGAA is willing to grant the same to CARRIER upon the terms and conditions hereinafter stated; and

E. The Parties agree to enter into this Agreement, specifying the rights and obligations of the Parties with respect to the operation of the Airport by PMGAA and the use and/or occupancy of the Airport by CARRIER;

NOW, THEREFORE, for good and valuable consideration, the mutual covenants and conditions herein set forth and the sufficiency of which is agreed to by the Parties, the Parties hereby agree as follows:

1. PERMITTED ACTIVITIES AND CONDITIONS OF AIRPORT USE.

1.1 CARRIER shall have the right to use, in common with others, the passenger terminal, taxiways, runways and air navigational aids of the Airport for the purpose of conducting its Federal Aviation Regulation (FAR) Part 121 scheduled domestic operations, public charter, private charter and the landing and taking off of aircraft incidental thereto, and provided, however, such activities and services are performed in strict accordance with applicable PMGAA Minimum Standards, upon terms and conditions as herein provided.

1.2 RESERVED.

1.3 CARRIER shall not engage in any other commercial or revenue producing activity at the Airport (excluding charter activities by CARRIER, and charter activities requested by PMGAA) without first applying for and receiving written approval for such activity from PMGAA. In the event any other commercial or revenue producing activity is engaged in by CARRIER prior to obtaining such approval, without waiver or limitation of any other remedies available to PMGAA at law or equity, CARRIER hereby agrees to remit to PMGAA the sum equal to TEN PERCENT (10%) of gross billings for such unauthorized activity, plus any expenses incurred by PMGAA in the course of any audit conducted for all of CARRIER's activities.

1.4 CARRIER shall at all times comply with all Federal, State and local laws, ordinances, rules and regulations which are applicable to its operations or the Premises itself (including but not limited to the Americans with Disabilities Act), including all laws, ordinances, rules and regulations adopted after the Effective Date. Carrier shall at all times comply with the PMGAA Rules and Regulations, as the same may be amended from time to time in the Authority's sole and absolute discretion.

2. TERM.

2.1 Subject to earlier termination as provided herein, the term of this Agreement shall be one (1) year, commencing on the Effective Date (the "Term").

2.2 Either Party may terminate this Agreement by providing the notified Party ninety (90) calendar days advance written notice of the terminating Party's intent to do so.

3. EXCLUSIVE, PREFERENTIAL, AND NONEXCLUSIVE RIGHTS.

CARRIER shall have the exclusive, preferential, and non-exclusive rights, as applicable, to occupy and use the designated areas of the Airport while in compliance with the terms and conditions of this Agreement. All rights granted to CARRIER under this Agreement are nonexclusive, except as otherwise expressly stated in this Agreement. PMGAA may, in its sole discretion and at any time, permit third parties to conduct any and all business activities at the Airport that PMGAA deems appropriate, or conduct such activities itself, provided that such activities do not require or materially interfere with CARRIER's use of the Airport.

3.1 CARRIER shall not schedule or advertise flight schedules originating from or destined for Phoenix-Mesa Gateway Airport without prior coordination with PMGAA and confirmation from PMGAA of terminal availability.

Pursuant to PMGAA's Common Use Facilities Operating Procedures (attached as **EXHIBIT C**), CARRIER shall submit a copy of CARRIER's proposed schedule to PMGAA no less than 60 days prior to the schedule effective date. Along with the schedule submission, CARRIER shall include the name and contact information of the individual responsible for setting CARRIER's schedule at the Airport.

3.2 PMGAA shall provide CARRIER with exclusive use of the Airport facilities identified in **EXHIBIT D**.

3.3 PMGAA shall provide CARRIER with preferential use of six (6) boarding gates and twelve (12) ticketing positions. In addition, CARRIER shall have common use access to additional ticket counters, gate hold rooms, and the baggage claim area for scheduled flight operations, the scheduling of such use is subject to the guidelines outlined in PMGAA's Common Use Facilities Operating Procedures. Common use requirements shall be scheduled with PMGAA's Operations & Maintenance department prior to any planned use.

3.4 PMGAA has implemented Common Use Facilities Operating Procedures. PMGAA reserves the right to modify said procedures from time-to-time, as it deems necessary in its sole and absolute discretion and authority to accomplish its purposes. CARRIER shall at all times comply with these operating procedures.

3.5 PMGAA has implemented an Airport Security Program in a form acceptable to the Transportation Security Administration (TSA). PMGAA reserves the right to modify said program from time-to-time, as it deems necessary to accomplish its purposes. CARRIER shall at all times comply with the Airport Security Program and indemnify, defend, hold and save PMGAA, its board members, member governments, officers, officials, employees, and agents free and harmless for, from, and against any violations of said Security Program caused, or alleged to be caused, by the acts, errors or omissions of CARRIER, its employees, agents, invitees or contractors.

4. RENTALS, FEES AND CHARGES

4.1 General. Rent for use of any exclusive use space is due and payable at the beginning of each month. All other fees are assessed at the time of each use, flight, or service, as applicable, and are due and payable no later than the twentieth (20th) day of the following month in which the use or activity occurred ("Fee Due Date"). CARRIER shall self-report its flight activity monthly to PMGAA pursuant to Section 5. Delinquent rents and fees shall be assessed a finance charge in accordance with Section 4.11.2. Any ground handling services requested of PMGAA or other authorized service provider by CARRIER shall be governed by a separate agreement. In any event, CARRIER shall be the responsible party for the purposes of this Air Carrier Operating Agreement, and therefore CARRIER shall pay, or cause to be paid, to PMGAA, the fees and charges as outlined below.

4.2 Landing Fees. CARRIER shall pay a landing fee at a rate equal to the amount reflected on the most current Airport Rates & Charges Schedule at the time of the aircraft operation, for each flight operated by or in conjunction with CARRIER that is subject to a landing fee. The weight used to determine the landing fee for any particular aircraft shall be its maximum certificated gross landing weight (MGLW), as certified by the Federal Aviation Administration (FAA).

4.3 Terminal Use Fees. Terminal Use includes ticket counter(s) and lobby area, secure hold room and boarding area podium, aircraft parking position, baggage claim area, and common use computer equipment per flight. CARRIER shall pay PMGAA a Terminal Use Fee in the amount reflected on the most current Airport Rates & Charges Schedule.

4.4 Common Use Set-up and Operating Fees. CARRIER shall pay PMGAA for common use terminal equipment, internet connection, and dark fiber per the most current Airport Rates & Charges Schedule.

4.5 Aircraft Parking Fees. CARRIER shall pay PMGAA a fee per the most recent Airport Rates & Charges Schedule for any aircraft occupying an aircraft parking position, including terminal gates and remote parking positions, for more than three hours. This fee shall be waived if the aircraft performed a revenue service operation the day prior or will perform a revenue service operation the day after being parked for more than three hours.

4.6 Passenger Facility Charges. CARRIER shall pay monthly to PMGAA, on or before the Twentieth (20th) day of each month (the "PFC Due Date"), a Passenger Facility Charges (PFC) in the amount of Four and 50/100 Dollars ($4.50) for each Enplaned Passenger departing the Airport on a CARRIER Revenue Flight during the previous calendar month. The collection of said fees by CARRIER shall be subject to the terms, conditions and methods of collection set forth in the Aviation Safety and Capacity Expansion Act of 1990, Section 9110, at it now exists or is modified hereafter (the "PFC Act") and 14 CFR 158.53.

4.7 Monthly Tie Down Fees. CARRIER shall pay Monthly Tie Down Fees per Airports Rates and Charges.

4.8 Fueling Fees. CARRIER shall execute a Fueling Service Agreement with PMGAA co-terminous with this Agreement.

4.9 Aircraft Ramp Space and Services. CARRIER shall pay PMGAA monthly for any aircraft line services, out-of-station Aircraft Rescue and Firefighting (ARFF) services, operations safety officers, ground service equipment use, fuel spill response teams and any other space or service requirements as specified in the Airport Rates & Charges Schedule or, if not so specified in that Schedule, as determined by PMGAA (collectively, "Additional Services").

4.10 Other Fees. Unless specified otherwise herein, CARRIER shall pay PMGAA for its usage or rental of PMGAA equipment and the performance of services by PMGAA within TEN (10) business days of CARRIER's receipt of an invoice (the "Invoice Due Date") for same from PMGAA. The

amount of such fees shall be as provided by separate agreement between CARRIER and PMGAA, or, in the absence of such agreement, as specified in the most current Airport Rates and Charges Schedule or Airport Fees, Services & Rental Rates in effect when the charge or fee was incurred. Failure to remit payment by the Invoice Due Date may result in the suspension of further equipment rentals or services until payment is made to PMGAA in full.

4.11 Requirements. With regard to the fees and charges specified in this SECTION 4, the following conditions and considerations shall apply:

4.11.1 Airport Rates & Charges Schedule. The Airport Rates & Charges Schedule and Airport Fees, Services and Rental Rates referred to in this Agreement may be revised from time to time. CARRIER shall pay the most current fee(s) at the time of the event or service, as applicable, unless specifically outlined in this Agreement. The current Airport Rates & Charges Schedule and the Airport Fees, Services and Rental Rates are attached as **EXHIBIT A** and is subject to change without prior notice or approval of CARRIER.

4.11.2 Finance Charges and Late Fees. If CARRIER fails to pay any charge due and owing to PMGAA in full on or before Fee Due Date, Invoice Due Date or PFC Due Date, as applicable, CARRIER shall be responsible for interest on the unpaid fee or charge at the rate of EIGHTEEN PERCENT (18%) per annum from the applicable due date until payment in full is made. In addition, in the event any payment is received more than TEN (10) days after the applicable due date, a late penalty of TEN PERCENT (10%) of the amount of such delinquent amount shall be due and payable in addition thereto.

4.11.3 Books and Records. CARRIER shall maintain permanent books, records and ledgers accurately reflecting the total passengers, and total number of monthly aircraft landings for all aircraft subject to a landing fee indicating the make, type (including model designation), registration number, maximum certificated gross landing weight, and arrival and departure time of each aircraft involved. These records shall be made available to PMGAA upon request. PMGAA may audit the books, records and ledgers maintained by CARRIER in accordance with this SECTION 4. In the event an audit reveals a deficiency of TWO PERCENT (2%) or greater in the amount of payment made pursuant to this SECTION 4, CARRIER shall not only pay such deficiency but also the cost of any audit performed by PMGAA.

4.12 Airport Incentives. As an inducement for CARRIER to initiate additional airline services at the Airport, PMGAA is prepared to provide a comprehensive package of incentives that could include landing fee and terminal use fee waivers, specific route revenue guarantees, and non-airline revenue sharing for eligible new nonstop destinations, increased frequency to existing destinations identified as underserved by PMGAA, and total annual emplaned passenger activity. The PMGAA Air Service Incentive Program for CARRIER is attached as **EXHIBIT E**.

5. REPORTING REQUIREMENTS

5.1 CARRIER shall file with PMGAA written reports for the items specified below no later than the TENTH (10th) day of the calendar month following the month in which the specified activities occurred. Such reports shall cover all of CARRIER's Airport activities during said month, and include activity handled by CARRIER for other Air Transportation Companies not having an agreement with PMGAA providing for its own submission of activity data to PMGAA.

5.1.1 A complete listing of all of CARRIERS's actual aircraft landings at the Airport, including aircraft type and MGLW; and a listing, by destinations, of the number of flights that qualify under applicable waiver agreements for any landing fee waivers;

5.1.2 A complete listing of CARRIER's Enplaned Passengers and Deplaned Passengers, specified by and including the type of aircraft;

5.1.3 A complete listing, by date and flight number, of CARRIER's commercial cargo loaded and off loaded.

5.2 PMGAA shall have the right to rely on said activity reports in determining rentals and other charges due hereunder; provided, however, CARRIER shall have full responsibility for the accuracy of said reports. Payment deficiencies due to incomplete or inaccurate activity reports shall be subject to interest charges as set forth in SECTION 4.11.2 herein.

5.3 CARRIER shall at all times maintain and keep books, ledgers, accounts or other records wherein are accurately kept all entries reflecting the activity statistics to be reported pursuant to SECTION 5. Such records shall be retained by CARRIER for a period of THREE (3) years subsequent to the activities reported therein, or such other retention period as set forth in 14 CFR Part 249.7, and made available at Mesa, Arizona for audit and/or examination by PMGAA or its duly authorized representative during all normal business hours. CARRIER shall produce such books and records at Mesa, Arizona within THIRTY (30) calendar days of PMGAA's notice to do so or pay all reasonable expenses, including but not limited to, transportation, food, lodging and other related expenses, necessary for an auditor selected by PMGAA to audit said books and records.

5.4 The cost of audit, with the exception of the aforementioned expenses, shall be borne by PMGAA; provided, however, the total cost of said audit shall be borne by CARRIER if either or both of the following conditions exist:

5.4.1 The audit reveals an underpayment of more than TWO PERCENT (2%) of rentals, fees and charges due hereunder, as determined by said audit; and/or

5.4.2 CARRIER has failed to maintain true and complete books, records, accounts and supportive source documents in accordance with SECTION 5.

5.5 All payments due and payable hereunder shall be paid in lawful money of the United States of America, without set off, by check made payable to the Phoenix-Mesa Gateway Airport Authority and delivered to:

Phoenix-Mesa Gateway Airport Authority
Attn.: Accounts Receivable
5835 S. Sossaman Road
Mesa, Arizona 85212-0614

6. INSURANCE

6.1 General. Carrier shall procure and maintain the following types and amounts of insurance for its operations at the Airport throughout the Term of this Agreement and any extension thereto:

Aircraft Liability insurance covering third party bodily injury and property damage, and passenger and contractual liabilities which shall protect and indemnify PMGAA from any and all claims arising in connection with aircraft movement on the Airport in amounts as are customarily carried by a carrier of like kind and size, but in no event less than $250,000,000.00 per occurrence. Such insurance shall also insure against third party liabilities arising from War Risk perils.

Airport Premises Liability insurance third party bodily injury and property damage, including coverage for "premises/operations," "products and completed operations," "host liquor" and "blanket contractual" liabilities in an amount not less than $250,000,000.00 per occurrence.

Comprehensive Automobile Liability insurance for all owned, non-owned and hired vehicles operated airside on the Airport that are assigned to or used in the performance of commercial activities in the amount of $25,000,000.00 per occurrence or combined single limit. If any hazardous materials are transported in conjunction with Carrier's business operations at or on the Airport, an MSC 90 endorsement shall be required in addition thereto.

Workers' Compensation insurance, as required by law, and *Employer's Liability* insurance in the amount of $1,000,000.

6.2 Additional Insurance. At any time during the Term of this Agreement, including any extension thereto, PMGAA may, in its reasonable determination decide that the insurance coverage required by this SECTION 6 is no longer adequate, require CARRIER to increase its coverage to commercially reasonable amounts.

6.3 Blanket Insurance. CARRIER's insurance obligations under this Agreement may be satisfied by means of the general corporate "blanket" policies carried by it and evidenced by the insurance carrier's standard certificates thereof.

6.3.1 Use of Proceeds. Proceeds of any liability and property damage insurance required under this SECTION 6 shall be applied toward extinguishing, satisfying or remedying the liability, loss or damage with respect to which such proceeds may be paid.

6.4 Indemnity. To the fullest extent permitted by law CARRIER (as "indemnitor") shall indemnify, defend, hold and save PMGAA, its board members, and its member governments, officers, officials, employees, and agents (as "indemnitee") free and harmless of, for, from and against any and all Losses caused in whole or in part by (a) any act or omission of CARRIER (including indemnitor's officers, officials, agents, employees, contractors or invitees), (b) CARRIER's operations at the Airport, (c) CARRIER's violations of said Security Program caused, or alleged to be caused, by the acts, errors or omissions of CARRIER, its employees, agents, invitees or contractors, or (d) any default by CARRIER hereunder. This indemnification shall exclude responsibility for any consequential damages and for claims to the extent arising by reason of the negligent or wrongful act of PMGAA or its employees, contractors or agents. For purposes hereof "Losses" shall mean any and all losses, liabilities, judgments, suits, claims, damages, fines, penalties, costs and expenses (including reasonable attorneys and consultant fees, investigation costs, monitoring costs, remediation costs, and court costs), of any kind or nature." In carrying out the defense of any claim subject to its indemnification obligations hereunder, CARRIER shall use counsel reasonably acceptable to PMGAA.

6.5 Insurance Form. Each insurance policy obtained pursuant to this SECTION 6, except for Workers' Compensation and Employer Liability policies, shall: (i) name PMGAA as a certificate holder or an additional insured to the extent of Operator's contractual indemnity obligations; (ii) contain a provision that written notice of cancellation or modification thereof shall be given to PMGAA not less than THIRTY (30) calendar days before such cancellation or modification takes effect (TEN (10) days in the case of nonpayment of premium); and (iii) contain a waiver of subrogation in favor of PMGAA. Operator shall not permit any insurance policy to be canceled or modified without PMGAA's written consent unless equivalent replacement policies are issued with no lapse in coverage. All policies shall be obtained from insurance companies licensed to do business in the State of Arizona and possessing a rating of at least A - VII or higher from the A.M. Best Company, or an equivalent rating approved by PMGAA.

7. DISABLED OR ABANDONED AIRCRAFT.

7.1 Removal of Disabled Aircraft. Should any aircraft owned or operated by CARRIER, through accident or for any other reason, become disabled or be abandoned in any area which could interfere with the continuous, normal operations of any of the runways, taxiways and airfield facilities at the Airport, CARRIER shall, at CARRIER'S sole cost and expense:

7.1.1 Immediately remove said aircraft to such location as may be designated by PMGAA, unless such aircraft is required to remain in place pending investigation by the appropriate regulatory agency or agencies of the federal government; and

7.1.2 In the event of any accident where federal investigation in place is required, immediately upon receiving clearance to do so from the appropriate federal agency, remove said aircraft and any wreckage or debris resulting therefrom to the area(s) designated by said federal agency authorizing such removal; otherwise, such aircraft wreckage and debris shall be immediately removed from the Airport or stored at a location approved by PMGAA.

7.2 Failure to Remove Disabled Aircraft. Should CARRIER fail to proceed immediately to remove disabled aircraft, or should aircraft owned or operated by CARRIER be abandoned on the Airport, PMGAA shall have the right to remove such aircraft by any means PMGAA deems necessary under the circumstances, and CARRIER shall, to the fullest extent permitted by law, indemnify, defend, keep and hold PMGAA, its members, board of directors, officers, agents, officials, servants, employees and contractors harmless from and against any and all claims, costs, loss, liability, actions, suits, proceedings, damage or expense (including costs of suit and attorneys' fees and expenses) incurred by PMGAA or claimed by anyone by reason of removal of said aircraft, injury to persons or property or damages to such aircraft caused by such removal, as well as storage costs therefor. CARRIER shall reimburse PMGAA for any costs incurred by PMGAA in removing and storing any aircraft, at PMGAA's sole discretion, and as provided herein in performing authorized maintenance on its aircraft on the Airport.

7.3 Sound and Noise Suppression. CARRIER shall comply fully with Airport Rules & Regulations and Minimum Standards when performing high-speed engine test operations at the Airport, if any, and SECTION 10.3 to mitigate excessive ambient sound and/or noise that may be generated incident thereto and that have or may have an adverse effect on other Airport tenant operations and the surrounding community. CARRIER acknowledges and agrees that the Airport Rules & Regulation for such test operations may change from time to time at PMGAA's sole and absolute discretion. CARRIER also agrees that any costs associated with compliance with Airport Rules & Regulations for sound or noise suppression or mitigation shall be borne solely by CARRIER.

8. ENVIRONMENTAL COMPLIANCE.

CARRIER shall at all times during the existence of this Agreement promptly observe and comply with applicable Federal, State, and local laws, regulations, rules and standards concerning the environment (collectively, the "Environmental Laws"). CARRIER shall be responsible for collecting, storing, recycling and/or disposing of its hazardous or toxic waste, if any, in compliance with the Environmental Laws governing the storage and disposal of hazardous or toxic waste. CARRIER shall ensure its employees and agents are aware that domestic drains, storm drains, or industrial waste drains shall not be used to dispose of gasoline, hydraulic fluid, solvents, concentrated cleaning agents or any other hazardous or toxic materials. Where so required, PMGAA may act on behalf of CARRIER, as and if appropriate, to dispose of CARRIER's waste, sign manifests on behalf of CARRIER and assign such disposal to CARRIER's EPA identification (ID) number. CARRIER shall repay PMGAA the costs and fees for doing so within TEN (10) days of demand therefor. CARRIER shall, to the fullest extent permitted by law, indemnify, defend and hold PMGAA, its members, board of directors, officers, agents, officials, employees, and contractors harmless from and against any and all claims, costs, loss, liability, actions, suits, proceedings, damage or expense including, but not limited to, the costs of suit and reasonable attorneys' fees and expenses of any nature whatsoever arising out of or related to CARRIER's failure to comply with the Environmental Laws.

9. TAXES AND RELATED IMPOSITIONS.

In the event any governmental authority shall impose a tax or imposition based upon this Agreement, upon CARRIER or its aircraft, or upon payments to be made hereunder, CARRIER shall pay such amounts either to PMGAA or the appropriate governmental authority on or before any delinquency date. Specifically, CARRIER shall be responsible for any transaction privilege, sales, excise or other similar tax except income taxes as a

result of this Agreement. CARRIER shall also pay all licensing or permitting fees necessary or required by law for the conduct of its aeronautical operations hereunder, or any other matters hereunder. CARRIER shall be responsible for any property interests created hereunder, which may constitute or be deemed to be a possessory interest for purposes of taxation.

10. RULES, REGULATIONS AND MINIMUM STANDARDS.

10.1 CARRIER shall at all times comply with all federal, State and local laws and ordinances, rules and regulations, which are applicable to its operations, or the operation, management, maintenance, or administration of the Airport, including but not limited to the Americans with Disabilities Act, and all laws, ordinances, rules and regulations adopted after the Effective Date. CARRIER shall at all times comply with all Airport Rules and Regulations, and Minimum Standards established by PMGAA regarding operation and maintenance of the Airport, copies of which are attached as **EXHIBIT B** and are incorporated herein. CARRIER will be responsible for controlling and preventing disruptive pedestrian and vehicle traffic, if any, associated with its activities on the Airport. CARRIER also shall display or provide copies to PMGAA of any permits, licenses, or other evidence of compliance with laws upon request.

10.2 PMGAA shall operate the Airport in compliance with all applicable Federal state and local laws, ordinances, rules and regulations, and shall enforce the Airport Rules and Regulations established by it to ensure the effective and orderly operation of the Airport, and to prevent any disruption caused by CARRIER's operations at and on the Airport.

10.3 CARRIER acknowledges receipt of and agrees to abide by PMGAA's *Fly Friendly* noise abatement procedures and will provide such information to flight crews and/or students, post the information in CARRIER's flight planning area, and use the procedures to the extent possible when consistent with safety and air traffic control directives.

11. DEFAULT: TERMINATION BY PMGAA

11.1 General Grounds. PMGAA may terminate this Agreement upon the occurrence of any of the following events:

11.1.1 Failure of CARRIER to perform any of its obligations under this Agreement, or any other contract, license or agreement between the Parties, which failure shall not be cured within FIVE (5) business days after delivery by PMGAA **to** CARRIER of a written notice of such failure.

11.1.2 The filing of any lien against the Airport because of any act or omission of CARRIER which is not discharged within FIVE (5) business days of receipt of actual notice of such lien by CARRIER.

CARRIER may terminate this Agreement upon the occurrence of any of the following events:

11.1.3 Failure of PMGAA to perform any of its obligations under this Agreement, or any other contract, license or agreement between the Parties, which failure shall not be cured within FIVE (5) business days after delivery by CARRIER **to** PMGAA of a written notice of such failure.

11.1.4 The filing of any lien against CARRIER because of any act or omission of PMGAA which is not discharged within FIVE (5) business days of receipt of actual notice of such lien by PMGAA.

11.2 Failure to Pay Fees. PMGAA may declare CARRIER in default of this Agreement by giving CARRIER FIVE (5) business day's written notice of CARRIER's failure to timely pay any fees or payments due pursuant to this Agreement. If CARRIER fails to cure such payment

default within said FIVE (5) business day period, PMGAA may, in its sole discretion, elect to do any one or more than one of the following:

11.2.1 Institute action(s) to enforce this Agreement; or

11.2.2 Terminate this Agreement automatically without further notice to CARRIER; or

11.2.3 Exercise any other remedy allowed by law or equity.

11.3 Failure to Provide Insurance. In the event CARRIER at any time fails to maintain all insurance coverage required by this Agreement, PMGAA shall have the right, upon written notice to CARRIER, **to** immediately terminate this Agreement or secure the required insurance at CARRIER's expense.

11.4 No Waiver by PMGAA. No waiver by PMGAA of any default by CARRIER in the performance of its obligations under this Agreement shall be deemed to be a waiver of any subsequent default by CARRIER in the performance of any such obligations.

12. GOVERNING LAW; ATTORNEY'S FEES.

The laws of the State of Arizona shall govern this Agreement and the matters set forth therein, without regard to its conflict of law principles. Venue of any action brought under this Agreement shall, at the option of PMGAA, lie in Maricopa County, Arizona. In the event of any litigation or arbitration between PMGAA and CARRIER arising under this Agreement, the successful party shall be entitled to recover its attorney's fees, expert witness fees and other costs incurred in connection with such litigation or arbitration.

13. NONWAIVER.

PMGAA's right to revoke this Agreement shall be absolute. Any election by PMGAA to not enforce any provision of this Agreement, or any failure by PMGAA to exercise any of the remedies allowed PMGAA under this Agreement, shall not operate as a waiver by PMGAA of any of its right hereunder.

14. ASSIGNMENT.

CARRIER shall not assign or transfer any right or interest in this Agreement.

15. OTHER RESTRICTIONS.

CARRIER shall comply with all rules, laws, ordinances, and statues of any governmental authority having jurisdiction over the Airport or the matters provided in this Agreement.

16. AIRPORT SECURITY.

PMGAA maintains an approved Airport Security Plan (the "Security Plan") pursuant to 49 CFR Parts 1540 and 1542. CARRIER shall at all times comply with the Security Plan and the written and verbal directives issued by PMGAA supporting the Security Plan.

16.1 CARRIER shall immediately correct physical or procedural deficiencies which are contrary to the Security Plan, security directives, security bulletins, or verbal notifications existing now or in the future. CARRIER is responsible for maintaining security practices, facilities, and perimeter boundaries on their leasehold that meet the security standards of the Security Plan.

16.2 CARRIER shall, to the fullest extent permitted by law, indemnify, defend, and hold PMGAA harmless for, from, and against any violations of the Security Plan committed by any agents, employees, invitees, subcontractors, or independent contractors of CARRIER.

16.3 CARRIER shall conduct and document all self-audits and self-inspections as required by the TSA or PMGAA and make such audits available for inspection.

16.4 CARRIER shall designate a primary security coordinator to receive security -related briefings, bulletins, and sensitive security information ("SSI").

16.5 PMGAA reserves the right to modify the Security Plan from time-to-time, as necessary, or as directed by the TSA.

17. AIRPORT SECURITY BADGE

17.1 Carrier employees/contractors that require a badge shall be obligated to complete all training and comply with all security requirements and directives issued by PMGAA, TSA, or other entities having jurisdiction at PMGAA.

17.2 CARRIER and employees/contractors shall comply with all security-related audits, inspection, and screenings conducted by PMGAA.

17.3 CARRIER will immediately notify PMGAA and promptly return badges to the Airport Badging Office when badge holders terminate employment, the badge is no longer needed, or the employee/contractor is on extended leave.

17.4 Misuse of a badge or security procedures will bring about punitive action including suspension or revocation of one or all badges.

18. NOTICE.

18.1 All notices required or permitted under this Agreement shall not be deemed effective unless personally delivered or mailed by certified mail, return receipt requested, postage prepaid, or by reputable commercial overnight courier service, to the following addresses:

TO PMGAA:	Phoenix-Mesa Gateway Airport Authority Attn.: Business Development Department 5835 S. Sossaman Road Mesa, Arizona 85212-0614
TO CARRIER:	Allegiant Air, LLC Attn: Director of Airports 1201 N. Town Center Drive Las Vegas, NV 89144

18.2 Notices shall be deemed to have been received TWO (2) business days after the date of mailing, if given by certified mail, or upon actual receipt if personally delivered or if given by reputable commercial overnight courier service. Any Party may designate in writing a different address for notice purposes pursuant to this SECTION.

19. PRIOR AGREEMENTS AND PERMITS.

Upon execution hereof, this Agreement shall supersede and cancel any prior air carrier operating agreements between PMGAA and CARRIER with respect to the business activities governed hereby. CARRIER shall not construe PMGAA's execution of this Agreement as a waiver of any prior indebtedness or obligation to PMGAA under any prior agreement or license, nor does PMGAA waive any claim or cause of action arising therefrom.

20. CORPORATE AUTHORIZATION.

In executing this Agreement, CARRIER represents and warrants to PMGAA that if CARRIER is a corporation, CARRIER has obtained and been granted the full right, power and authority to enter into this Agreement.

21. MISCELLANEOUS.

21.1 Personal Liability. No member of or employee of either Party shall be charged personally or held contractually liable by or to the other Party under any term or provision of this Agreement because of any breach thereof or because of its execution or attempted execution.

21.2 No Waiver. No provision of this Agreement may be waived or modified except by a writing signed by the Party against whom such waiver or modification is sought.

21.3 Non-Waiver of Rights. No waiver or default by PMGAA of any of the terms, conditions, covenants or agreements hereof to be performed, kept or observed by CARRIER shall be construed or act as a waiver of any subsequent default of any of the terms, covenants, conditions or agreements herein contained to be performed, kept or observed by CARRIER, and PMGAA shall not be restricted from later enforcing any of the terms and conditions of this Agreement.

21.4 Amendment. Only a written instrument executed by the Parties may amend this Agreement.

21.5 Invalid Provisions. Should any provision of this Agreement or any application thereof be held invalid by a court of competent jurisdiction, the remainder of this Agreement shall not be affected thereby, unless one or both Parties would be substantially and materially prejudiced.

21.6 Headings. The headings contained herein are for convenience in reference only and are not intended to define or limit the scope of this Agreement or any term thereof.

21.7 Entire Agreement. This Agreement, including **EXHIBITS** attached hereto at the time of its execution, constitutes the entire agreement between the Parties hereto and supersedes all prior negotiations, understandings and agreements between the Parties concerning such matters.

22. INCORPORATION OF RECITALS.

The recitals set forth above are acknowledged by the Parties to be true and correct and are incorporated herein by this reference.

IN WITNESS WHEREOF, the Parties have executed this Agreement to be effective on the Effective Date specified above.

CARRIER:	**PMGAA:**
ALLEGIANT AIR, LLC	**PHOENIX-MESA GATEWAY AIRPORT AUTHORITY,** a joint powers airport authority authorized by the State of Arizona
By: _____	By: _____
Name: Thayne Klinger	Name: J. Brian O'Neill, A.A.E.
Title: Director of Airports	Title: Executive Director/CEO
Date: _____	Date: _____

EXHIBIT A

Airport Rates & Charges Schedule

https://www.gatewayairport.com/Documents/DocumentLibrary/Airport%20Rates%20and%20Charges/Airport%20Rates%20and%20Charges%20effective%2010-1-21.pdf?Uniqueifier=i7BnHmQryk

Airport Fees, Services & Rental Rates

https://www.gatewayairport.com/Documents/DocumentLibrary/ExecDirSect/Airport%20Fees,%20Services%20and%20Rental%20Rates%20Effective%209-1-2021.pdf?Uniqueifier=ZsmeV8Pnt5

EXHIBIT B

PMGAA Minimum Standards

https://www.gatewayairport.com/Documents/DocumentLibrary/Board%20Policies/Airport%20Minimum%20Standards.pdf?Uniqueifier=ouIVauG2kL

PMGAA Rules & Regulations

https://www.gatewayairport.com/Documents/DocumentLibrary/Board%20Policies/Airport%20Rules%20and%20Regulations_21-49.pdf?Uniqueifier=I5FDU4WQYn

EXHIBIT C

Common Use Facilities Operating Procedures:

https://www.gatewayairport.com/Documents/DocumentLibrary/Regulatory%20Documents/Record_PMGAA_CUSE%20Procedures%2021-01%2020211110.pdf?Uniqueifier=tyidGS7ons

EXHIBIT D

Airport Facilities Designated for Exclusive Use*:

Space	Amount of SF	Rent per SF
Ticketing Terminal – Suite 207	675 SF	$34.00 / SF / Year**
Line Shack (building 1355)	678 SF	$18.00 / SF / Year **

* PMGAA has all of the building maintenance & utility (water, electricity, etc.) responsibilities for space designated for CARRIER's exclusive use.

** The rent per SF does not include any applicable taxes. The applicable taxes will be charged in addition to the rent.

EXHIBIT E

Incentives to Increase Air Service:

1) PMGAA's approved Air Service Incentive Program (Effective January 1, 2017) is provided below:

https://www.gatewayairport.com/Documents/DocumentLibrary/Board%20Policies/Air%20Service%20Incentive%20Program_16-58.pdf?Uniqueifier=byRBuEnjFo

2) During the Term of this Agreement, if CARRIER maintains its Signatory Carrier status and pursuant to Part D of the Air Service Incentive Program, PMGAA agrees to share non-Airline revenue (parking fees, rental car fees, food and beverage concessions, and retail concessions) with CARRIER as outlined below:

Fiscal Year EPAX Thresholds	**Increase in Fiscal Year EPAX Above 800,000 Threshold**	**Percentage of Incremental Non-Airline Revenue Shared for Incremental Increase in EPAX Above Threshold**
0 – 800,000	Not Applicable	0.0%
800,001 – 850,000	50,000 (800,001 – 850,000)	15.0%
850,001 – 900,000	50,000 (800,001 – 850,000) 50,000 (850,001 – 900,000)	15.0% 17.5%
900,001 – 950,000	50,000 (800,001 – 850,000) 50,000 (850,001 – 900,000) 50,000 (900,001 – 950,000)	15.0% 17.5% 20.0%
950,001, - 1,000,000	50,000 (800,001 – 850,000) 50,000 (850,001 – 900,000) 50,000 (900,001 – 950,000) 50,000 (950,001 – 1,000,000)	15.0% 17.5% 20.0% 22.5%
1,000,001 – 1,050,000	50,000 (800,001 – 850,000) 50,000 (850,001 – 900,000) 50,000 (900,001 – 950,000) 50,000 (950,001 – 1,000,000) 50,000 (1,000,001 – 1,050,000)	15.0% 17.5% 20.0% 22.5% 25.0%

Phoenix-Mesa Gateway Airport Authority
5835 S Sossaman Road
Mesa, Arizona 85212-6014
www.gatewayairport.com

Board Action Item

Re: Resolution 21-56

To:	**Board of Directors**
From:	**Shea Joachim, CEcD, Business Development Director**
Through:	**J. Brian O'Neill, A.A.E., Executive Director/CEO**
Subject:	**Amendment 2 – Pegasus Mesa Owner, LLC**
Date:	**December 21, 2021**

Proposed Motion
To authorize Amendment 2 to the Land Lease with Pegasus Mesa Owner, LLC to add 5,840 square feet to the Premises located at the corner of Sossaman Road and Velocity Way.

Narrative
The Phoenix-Mesa Gateway Airport Authority ("Lessor") and Pegasus Mesa Owner, LLC ("Lessee") are Parties to the Land Lease dated and effective August 1st, 2006 for the approximately 182,776 square feet located at the corner of Sossaman Road and Velocity Way ("Premises").

The original Lessee constructed drive aisle improvements on the east end of the Premises that extended over the property line to serve future development. The Master Plan for SkyBridge Arizona does not utilize these drive aisle improvements for access to the site. To ensure there are appropriate maintenance responsibilities and payment for these improvements, staff proposes Amendment 2 to the Land Lease to add an additional 5,840 square feet to the Premises. The Notice section is also amended to reflect the current ownership of the Improvements.

There are no further changes to the Land Lease.

Attachment(s)
Land Lease Amendment 2

RESOLUTION NO. 21-56

WHEREAS, the Phoenix-Mesa Gateway Airport Authority ("Authority"), a joint powers airport authority formed pursuant to Arizona Revised Statute §28-8521 *et seq.* owns and operates the Phoenix-Mesa Gateway Airport ("Airport"); and

WHEREAS the Authority desires to authorize Amendment 2 to the Land Lease with Pegasus Mesa Owner, LLC to add 5,840 square feet to the Premises located at the corner of Sossaman Road and Velocity Way.

NOW, THEREFORE, BE IT RESOLVED by the Board of Directors of the Authority as follows:

> **The Board of Directors of the Authority hereby authorizes Amendment 2 to the Land Lease with Pegasus Mesa Owner, LLC to add 5,840 square feet to the Premises located at the corner of Sossaman Road and Velocity Way. This resolution also authorizes the Chair or Executive Director/CEO to make such additions, deletions, and changes as may be approved by the Chair or Executive Director/CEO, necessary to carry out the purposes and intent of this Resolution.**
>
> Passed and adopted by the Authority this 21st day of December, 2021.

John Giles, Chair

ATTEST:

Misty Johnson, Clerk of the Board

APPROVED AS TO FORM:

Jill Casson Owen, Attorney

Phoenix-Mesa Gateway Airport Authority

SECOND AMENDMENT TO LEASE

This SECOND AMENDMENT TO LEASE ("Amendment 2") is executed to be effective as of the FIRST (1st) day of JANUARY 2022 ("Amendment 2 Effective Date") by and between the **PHOENIX-MESA GATEWAY AIRPORT AUTHORITY**, a joint powers airport authority authorized and existing under the laws of the State of Arizona ("Lessor"), and **PEGASUS MESA OWNER, LLC,** a Delaware limited liability company ("Lessee").

RECITALS:

A. Lessor and Lessee are parties to that certain Lease Agreement dated and effective the FIRST (1st) day of AUGUST 2006, as amended by the First Amendment to Lease dated MARCH 1, 2010 , and assigned pursuant to the Assignment and Assumption of Ground Lease dated DECEMBER 17, 2012, and assigned by Assignment and Assumption of Ground Lease dated NOVEMBER 30, 2019, and assigned to Lessee by Assignment and Assumption of Ground Lease dated OCTOBER 20, 2021 (collectively, the "Lease") , with respect to that certain real property at the Airport located at 7665 E. Velocity Way, Mesa, AZ 85212, and commonly described as LOT 104 and Lot 105, which real property is more particularly described in the Lease as the "Premises".

B. The Parties desire to enter into this AMENDMENT 2 in order to increase the size of the Premises to include the drive aisle serving the Premises on the east end of Lot 105 consisting of approximately 5,840 square feet, resulting in a total of 188,616 square feet (4.33 acres) of land in the Premises.

NOW, THEREFORE, in consideration of the mutual covenants and agreements contained in this AMENDMENT 2 and other good and valuable consideration, the receipt and sufficiency of which are hereby acknowledged, the Parties agree as follows:

1. The above recitals are hereby confirmed as true and correct and are reaffirmed herein.

2. Each capitalized term used in this Amendment 2 and not defined herein shall be deemed to have the same meaning ascribed to it in the Lease.

3. The contents of **EXHIBIT "A"** are hereby deleted in their entirety and replaced with the attached **Exhibit "A"**.

4. Commencing with the Amendment 2 Effective Date, the Base Rent shall be ONE HUNDRED AND TWENTY-ONE THOUSAND, TWO HUNDRED AND SEVENTY-TWO AND 54/100 DOLLARS ($121,272.54), payable in monthly installments of TEN THOUSAND, ONE HUNDRED AND SIX 05/100 DOLLARS ($10,106.05). The CPI increases and the market adjustments to Base Rent as provided in Sections 4.2 and 4.3 of the Lease shall continue to apply in accordance with the terms of the Lease, as amended by this Amendment 2.

5. The addressees specified within SECTION 19, NOTICE, are hereby deleted in their entirety and replaced with the following:

TO LESSOR:

Phoenix-Mesa Gateway Airport Authority
Attn: Business Development Department
5835 S. Sossaman Road
Mesa, Arizona 85212-0614

TO LESSEE:

Pegasus Mesa Owner, LLC
c/o Equus Capital Partners, Ltd.
3843 West Chester Pike
Newtown Square, PA 19073
Attn: Christopher J. Locatell
Email: clocatell@equuspartners.com

WITH A COPY TO:

Equus Capital Partners, Ltd.
3843 West Chester Pike
Newtown Square, PA 19073
Attn: General Counsel
Email: ikelly@equuspartners.com

6. Lessee warrants and represents to Lessor that: (i) all necessary actions have been taken to authorize the execution of this AMENDMENT 2 by Lessee; (ii) the persons who have executed this AMENDMENT 2 on behalf of Lessee are duly authorized to do so; and (iii) this AMENDMENT 2 constitutes a legal, valid and binding obligation of Lessee, enforceable against Lessee in accordance with its terms and the terms of the Agreement.

7. In all other respects the Lease shall remain unchanged and in full force and effect. The Lease, as amended by this AMENDMENT 2 shall continue to be binding upon Lessor and Lessee and their permitted successors and assigns.

8. All of the Recitals set forth above are incorporated into this AMENDMENT 2 by this reference.

Executed as of the Amendment 2 Effective Date.

FOR LESSOR:

PHOENIX-MESA GATEWAY AIRPORT AUTHORITY, an Arizona joint powers Authority.

By:_____

Name: J. Brian O'Neill, A.A.E.
Executive Director/CEO

FOR LESSEE:

PEGASUS MESA OWNER, LLC,
a Delaware limited liability company.

By: _____

Name: Arthur P. Pasquarella
Executive Vice President

EXHIBIT A

Description of the Premises

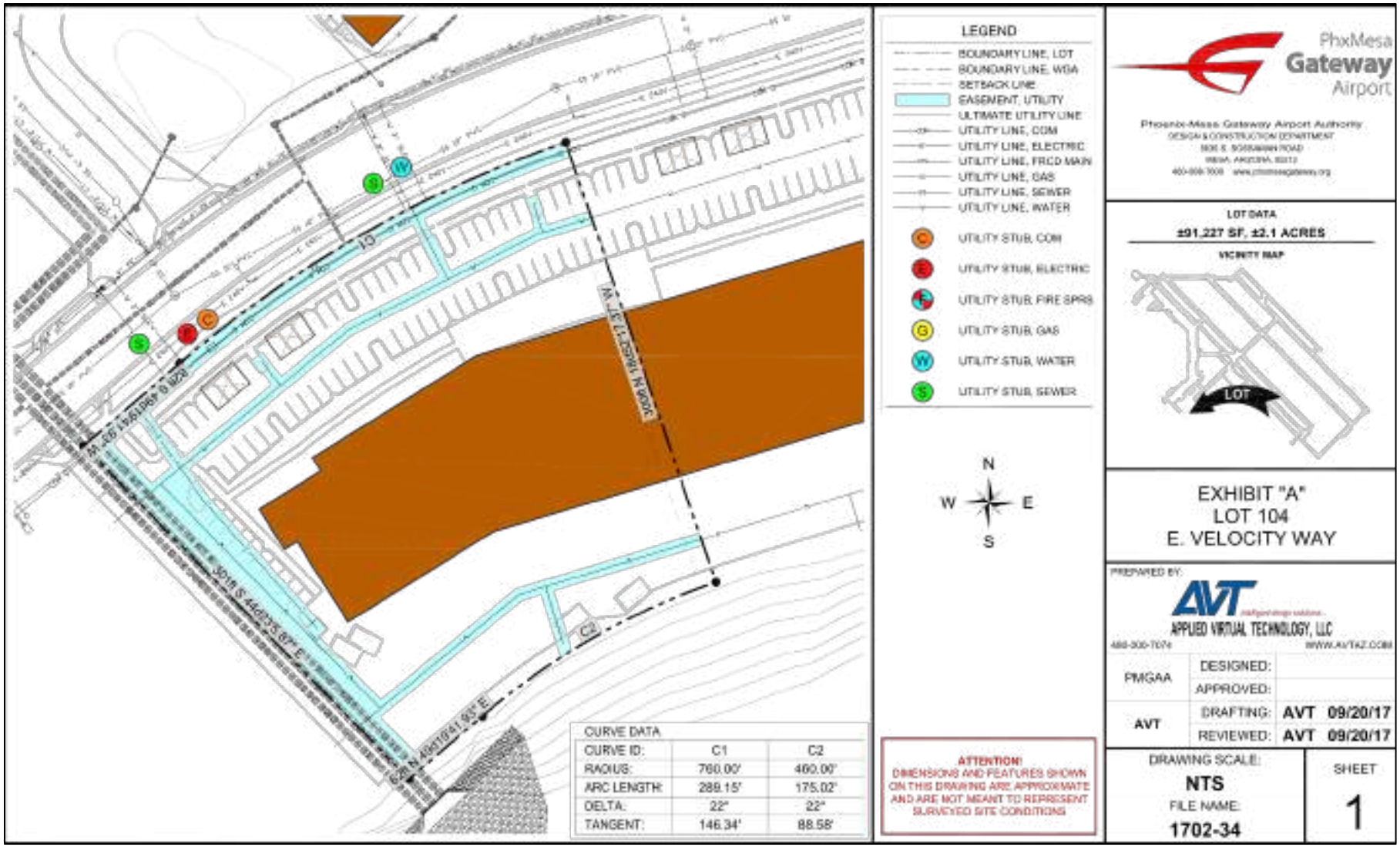

Exhibit A

Description of the Premises (Continued)

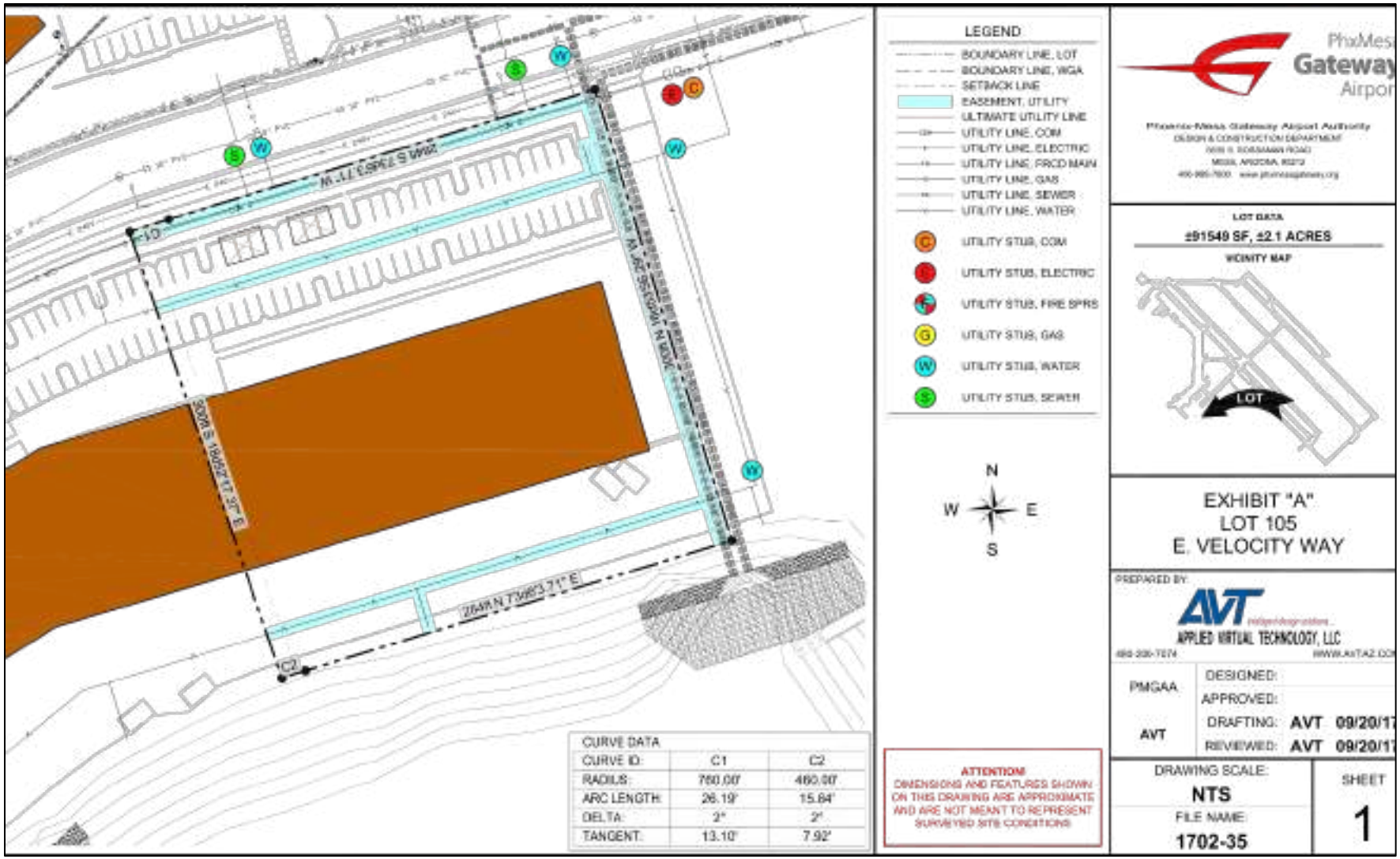

Exhibit A

Description of the Premises (Continued)

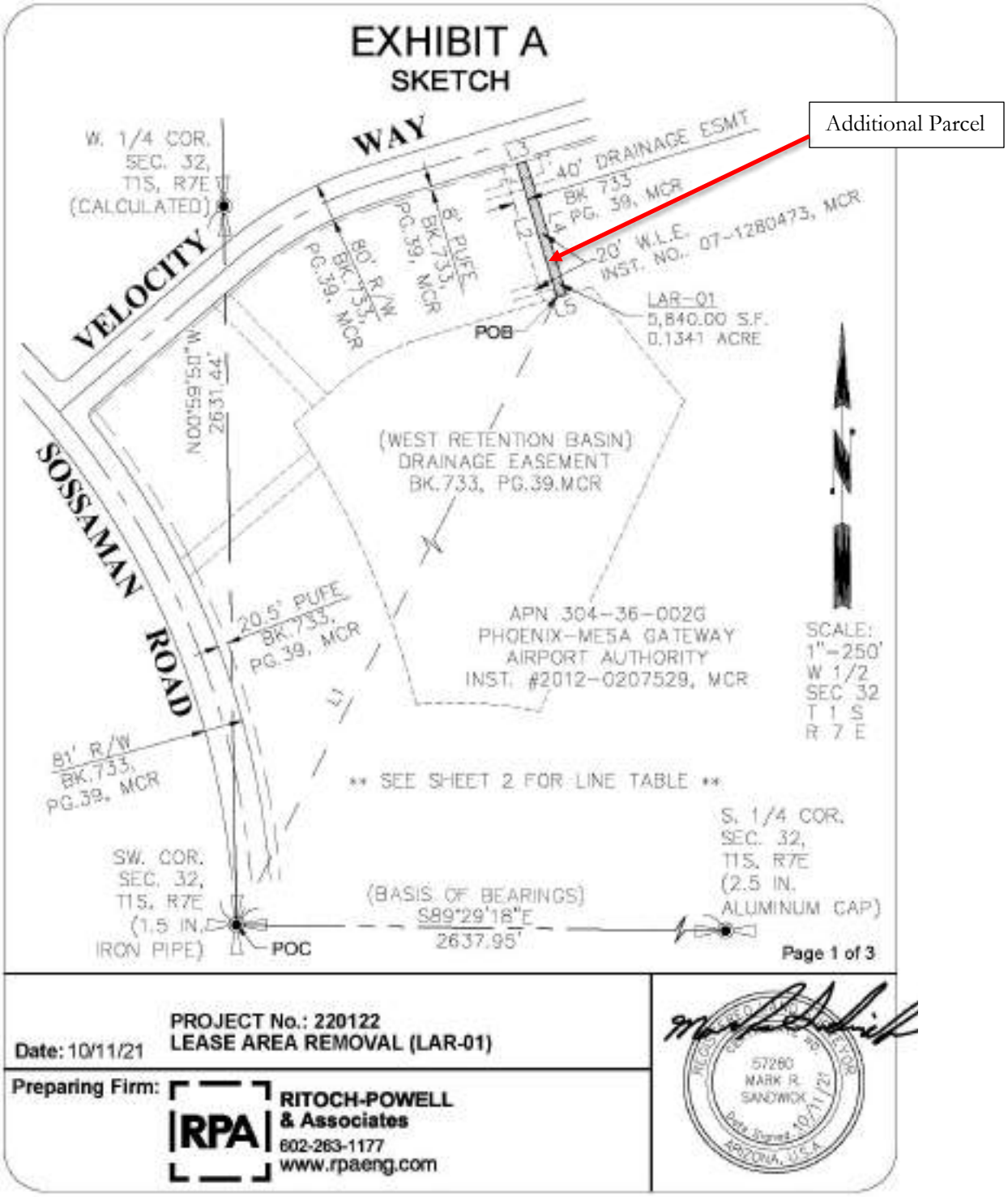

Exhibit A

Description of the Premises (Continued)

Additional Parcel – (Continued)

EXHIBIT A
LINE TABLE

LINE TABLE

LINE	BEARING	LENGTH
[illegible]	[illegible]	[illegible]
[illegible]	[illegible]	[illegible]
[illegible]	[illegible]	[illegible]
[illegible]	[illegible]	[illegible]
[illegible]	[illegible]	[illegible]

Page 2 of 3

SKYBRIDGE
PROJECT No.: 220122
LEASE AREA REMOVAL (LAR-01)
Date: 10/11/21

Preparing Firm: RPA RITOCH-POWELL & Associates 602-263-1177 www.rpaeng.com

EXHIBIT A
LEGAL DESCRIPTION

A PARCEL OF LAND BEING A PORTION OF THAT TRACT AS CONVEYED TO PHOENIX-MESA GATEWAY AIRPORT AUTHORITY BY DEED OF RECORD IN INSTRUMENT NUMBER 2012-0207529, MARICOPA COUNTY RECORDS (MCR) AND LOCATED IN THE WEST HALF OF SECTION 32, TOWNSHIP 1 SOUTH, RANGE 7 EAST OF THE GILA & SALT RIVER MERIDIAN, CITY OF MESA, MARICOPA COUNTY, ARIZONA, MORE PARTICULARLY DESCRIBED AS FOLLOWS:

COMMENCING AT THE SOUTHWEST CORNER OF SAID SECTION 32 (1.5 IN. IRON PIPE) FROM WHICH POINT THE SOUTH QUARTER CORNER THEREOF (2.5 IN ALUMINUM CAP) BEARS S 89°29'18" E A DISTANCE OF 2637.95 FEET;

THENCE ACROSS SAID AIRPORT TRACT THE REMAINING COURSES AND DISTANCES:

THENCE N15°40'16"E A DISTANCE OF 2430.44 FEET TO A NORTHEAST CORNER OF THAT DRAINAGE EASEMENT (WEST RETENTION BASIN) SHOWN ON THE MAP OF DEDICATION OF VELOCITY WAY, SOUTH TAXIWAY CIRCLE AND SOUTH CARGO WAY RECORDED IN BOOK 733, PAGE 39, MCR, THE POINT OF BEGINNING;

THENCE N16°55'01"W, ALONG THE EAST LINE OF THAT 40.00 FOOT WIDE DRAINAGE EASEMENT, A DISTANCE OF 292.00 FEET TO A POINT ON THE SOUTH LINE OF AN 8.00 FOOT WIDE PUBLIC UTILITY AND FACILITIES EASEMENT AS SHOWN ON SAID MAP OF DEDICATION;

THENCE N73°06'25"E, ALONG SAID SOUTH LINE A DISTANCE OF 20.00 FEET;

THENCE S16°55'01"E, ACROSS AND ALONG AN EAST LINE OF THAT WATERLINE EASEMENT RECORDED IN INSTRUMENT NUMBER 2007-1280473, MCR, A DISTANCE OF 292.00 FEET TO A POINT ON AFOREMENTIONED NORTH LINE OF SAID EASEMENT;

THENCE S73°06'25"W, ALONG SAID NORTH LINE, A DISTANCE OF 20.00 FEET TO THE POINT OF BEGINNING.

THE ABOVE DESCRIBED PARCEL OF LAND CONTAINS 5,840.00 SQUARE FEET (0.1341 ACRE) OF LAND, MORE OR LESS, INCLUDING ANY EASEMENTS OF RECORD.

THE BASIS OF BEARING FOR THE ABOVE DESCRIPTION IS S 89°29'18" E FOR THE SOUTH LINE OF THE SOUTHWEST QUARTER OF SECTION 32, TOWNSHIP 1 SOUTH, RANGE 7 EAST OF THE GILA & SALT RIVER MERIDIAN, CITY OF MESA, MARICOPA COUNTY, ARIZONA, AS SHOWN ON THE PLSS SUBDIVISION RECORD OF SURVEY-MARICOPA COUNTY GEODETIC DENSIFICATION AND CADASTRAL SURVEY RECORDED IN BOOK 609, PAGE 29, MARICOPA COUNTY RECORDS.

Page 3 of 3

SKYBRIDGE
PROJECT No.: 220122
LEASE AREA REMOVAL (LAR-01)
Date: 10/11/21

Preparing Firm: RPA RITOCH-POWELL & Associates 602-263-1177 www.rpaeng.com

BIZZINI MARK R. SANDNER 10/11/21 ARIZONA

Phoenix-Mesa Gateway Airport Authority
5835 S Sossaman Road
Mesa, Arizona 85212-6014
www.gatewayairport.com

Board Action Item

Re: Resolution 21-57

To:	**Board of Directors**
From:	**Shea Joachim, CEcD, Business Development Director**
Through:	**J. Brian O'Neill, A.A.E., Executive Director/CEO**
Subject:	**Mesa SkyBridge, LLC – Master Lease Adjustment Amendment**
Date:	**December 21, 2021**

Proposed Motion
To authorize the Adjustment Amendment to the Master Lease with Mesa SkyBridge, LLC to remove 5,840 square feet from the northwest corner of the Property.

Narrative
The Phoenix-Mesa Gateway Airport Authority ("PMGAA") and Mesa SkyBridge, LLC ("SkyBridge") entered into a Master Lease Agreement on April 1st, 2018 for the approximately 360-acres located at the southeast corner of Sossaman Road and Velocity Way ("Property").

Approximately 5,840 square feet of the Property incorporates drive aisle improvements that serve a different property. These improvements were developed over property boundaries in preparation for future development access. The SkyBridge Master Plan does not utilize these improvements for access to the Property. Staff recommends approving the Adjustment Amendment to the Master Lease to remove the 5,840 square feet from the Property listed in the Master Lease.

There are no other changes to the Master Lease.

Attachment(s)
Master Lease Adjustment Amendment

RESOLUTION NO. 21-57

WHEREAS, the Phoenix-Mesa Gateway Airport Authority ("Authority"), a joint powers airport authority formed pursuant to Arizona Revised Statute §28-8521 *et seq.* owns and operates the Phoenix-Mesa Gateway Airport ("Airport"); and

WHEREAS the Authority desires to authorize the Adjustment Amendment to the Master Lease with Mesa SkyBridge, LLC to remove 5,840 square feet from the northwest corner of the Property.

NOW, THEREFORE, BE IT RESOLVED by the Board of Directors of the Authority as follows:

> **The Board of Directors of the Authority hereby authorizes the Adjustment Amendment to the Master Lease with Mesa SkyBridge, LLC to remove 5,840 square feet from the northwest corner of the Property. This resolution also authorizes the Chair or Executive Director/CEO to make such additions, deletions, and changes as may be approved by the Chair or Executive Director/CEO, necessary to carry out the purposes and intent of this Resolution.**
>
> Passed and adopted by the Authority this 21st day of December, 2021.

John Giles, Chair

ATTEST:

Misty Johnson, Clerk of the Board

APPROVED AS TO FORM:

Jill Casson Owen, Attorney

ADJUSTMENT AMENDMENT TO MASTER LEASE

Remove Northwestern Linear Parcel

THIS ADJUSTMENT AMENDMENT TO MASTER LEASE ("**Amendment**") is made as of the 1st day of January, 2022, by and between **PHOENIX-MESA GATEWAY AIRPORT AUTHORITY**, a joint powers airport authority authorized and existing under the laws of the State of Arizona ("**Lessor**"), and **MESA SKYBRIDGE LLC**, an Arizona limited liability company ("**Lessee**"). Lessor and Lessee may be referred to jointly as "Parties," and each separately may be referred to as a "Party."

RECITALS

A. Lessor and Lessee are parties to that certain Master Lease dated April 1, 2018, as amended by that certain First Amendment to Master Lease dated August 1, 2018, and that certain Second Amendment to Master Lease dated August 1, 2019, and that certain Adjustment Amendment to Master Lease dated November 1, 2019, that certain Adjustment Amendment to Master Lease dated December 1, 2019, and that certain Adjustment Amendment to Master Lease dated May 1, 2020, and that certain Adjustment Amendment to Master Lease dated April 1, 2021, and that certain Adjustment Amendment to Master Lease dated May 1, 2021 (collectively, the "**Lease**") covering certain property commonly known as Gateway Aerospace Park at the Phoenix-Mesa Gateway Airport, which property is more particularly described in the Lease, and referred to in the Lease and in this Amendment as "**Property**."

B. A portion of the Property includes the "Northwestern Linear Parcel" as depicted and described on Exhibit A attached hereto, comprising approximately of 5,840 SF.

C. The Parties desire to modify the Lease to remove the Northwestern Linear Parcel from the Property.

NOW, THEREFORE, in exchange for the mutual covenants and promises contained herein and for other valuable consideration, the receipt and sufficiency of which are hereby acknowledged, Lessor and Lessee agree as follows:

1. Recitals. The above recitals are hereby confirmed as true and correct and are reaffirmed herein.

2. Property Adjustment. The Northwestern Linear Parcel, as described in Exhibit A attached hereto, is hereby removed from the Lease and the Rentable Premises. As of the date of this Amendment, after removing the Northwestern Linear Parcel from the Lease, the Rentable Premises is 14,406,843 SF.

3. Amendment to Declaration. Lessee shall amend the Declaration of Covenants, Conditions and Restrictions for Skybridge Arizona ("**Declaration**") to remove the Northwestern Linear Parcel from the property encumbered by the Declaration by recording a Declaration of De-Annexation in accordance with Section 6.2 of the Declaration ("**Declaration De-Annexation**"). The Parties agree that the Declaration De-Annexation shall solely consist of modifying the legal description set forth in Exhibit A of the Declaration, to remove the Northwestern Linear Parcel from the Project (as such term is defined in the Declaration). Prior to recording, Lessee shall obtain Lessor's approval of the Declaration De-Annexation. Lessee shall record the Declaration De-Annexation on or before March 31, 2022.

4. Miscellaneous.

(a) Capitalized Terms/Definitions. Each capitalized term used in this Amendment and not defined herein shall be deemed to have the same meaning ascribed to it in the Lease.

(b) Continuing Effect. Except as specifically provided in this Amendment, the provisions of the Lease shall remain unchanged and in full force and effect. In the event of a conflict between the Lease and this Amendment, this Amendment shall control.

(c) Authority. Each person executing this Amendment on behalf of a Party represents and warrants that it has the full power, authority, and legal right to execute and deliver this Amendment on behalf of such Party and that this Amendment constitutes the legal, valid, and binding obligations of such Party, its heirs, representatives, successors, and assigns, enforceable against such Party or Parties in accordance with its terms.

(d) Counterparts. To facilitate execution of this Amendment, this Amendment may be executed in one or more counterparts as may be convenient or required, and an executed copy of this Amendment delivered electronically by e-mail shall have the effect of an original, executed instrument. All counterparts of this Amendment shall collectively constitute a single instrument; but, in making proof of this Amendment it shall not be necessary to produce or account for more than one such counterpart executed by each Party hereto. It shall not be necessary for the signature of, or on behalf of, each Party hereto, or that the signature of all persons required to bind any such Party appear on each counterpart of this Amendment.

IN WITNESS WHEREOF, the Parties have executed this Amendment as of the day and year first above written.

LESSOR:

PHOENIX-MESA GATEWAY AIRPORT AUTHORITY, an Arizona joint powers airport authority

By:_____

J. Brian O'Neill, A.A.E.

Executive Director/CEO

LESSEE:

MESA SKYBRIDGE LLC, an Arizona limited liability company

By:_____

Felipe Monroy Torres

Chief Executive Officer

Exhibit A

Northwestern Linear Parcel

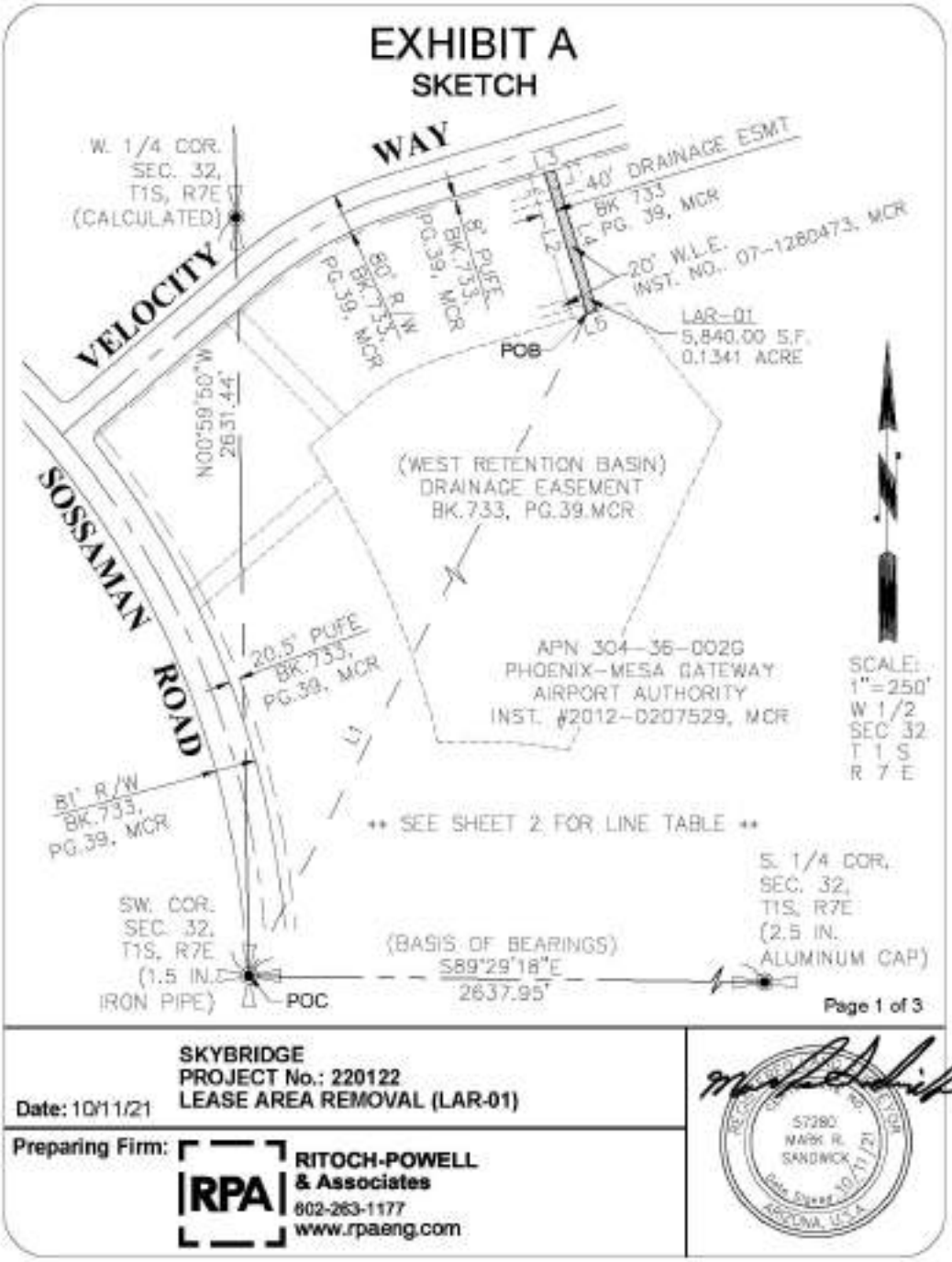

SKYBRIDGE
PROJECT No.: 220122
LEASE AREA REMOVAL (LAR-01)

Date: 10/11/21

Preparing Firm: RPA **RITOCH-POWELL & Associates**
602-263-1177
www.rpaeng.com

57280
MARK R.
SANDWICK
Date Signed 10/11/21
ARIZONA, U.S.A.

EXHIBIT A
LINE TABLE

LINE TABLE		
LINE	BEARING	LENGTH
L1	N15°40'16"E	2430.44'
L2	N16°55'01"W	292.00'
L3	N73°06'25"E	20.00'
L4	S16°55'01"E	292.00'
L5	S73°06'23"W	20.00'

SKYBRIDGE
PROJECT No.: 220122
LEASE AREA REMOVAL (LAR-01)

Date: 10/11/21

Preparing Firm:

RITOCH-POWELL & Associates
602-263-1177
www.rpaeng.com

REGISTERED LAND SURVEYOR
CERTIFICATE NO.
57280
MARK R.
SANDWICK
Date Signed 10/11/21
ARIZONA, U.S.A.

EXHIBIT A

LEGAL DESCRIPTION

A PARCEL OF LAND BEING A PORTION OF THAT TRACT AS CONVEYED TO PHOENIX-MESA GATEWAY AIRPORT AUTHORITY BY DEED OF RECORD IN INSTRUMENT NUMBER 2012-0207529, MARICOPA COUNTY RECORDS (MCR) AND LOCATED IN THE WEST HALF OF SECTION 32, TOWNSHIP 1 SOUTH, RANGE 7 EAST OF THE GILA & SALT RIVER MERIDIAN, CITY OF MESA, MARICOPA COUNTY, ARIZONA, MORE PARTICULARLY DESCRIBED AS FOLLOWS:

COMMENCING AT THE SOUTHWEST CORNER OF SAID SECTION 32 (1.5 IN. IRON PIPE) FROM WHICH POINT THE SOUTH QUARTER CORNER THEREOF (2.5 IN ALUMINUM CAP) BEARS S 89°29'18" E A DISTANCE OF 2637.95 FEET;

THENCE ACROSS SAID AIRPORT TRACT THE REMAINING COURSES AND DISTANCES:

THENCE N15°40'16"E A DISTANCE OF 2430.44 FEET TO A NORTHEAST CORNER OF THAT DRAINAGE EASEMENT (WEST RETENTION BASIN) SHOWN ON THE MAP OF DEDICATION OF VELOCITY WAY, SOUTH TAXIWAY CIRCLE AND SOUTH CARGO WAY RECORDED IN BOOK 733, PAGE 39, MCR, THE POINT OF BEGINNING;

THENCE N16°55'01"W, ALONG THE EAST LINE OF THAT 40.00 FOOT WIDE DRAINAGE EASEMENT, A DISTANCE OF 292.00 FEET TO A POINT ON THE SOUTH LINE OF AN 8.00 FOOT WIDE PUBLIC UTILITY AND FACILITIES EASEMENT AS SHOWN ON SAID MAP OF DEDICATION;

THENCE N73°06'25"E, ALONG SAID SOUTH LINE A DISTANCE OF 20.00 FEET;

THENCE S16°55'01"E, ACROSS AND ALONG AN EAST LINE OF THAT WATERLINE EASEMENT RECORDED IN INSTRUMENT NUMBER 2007-1280473, MCR, A DISTANCE OF 292.00 FEET TO A POINT ON AFOREMENTIONED NORTH LINE OF SAID EASEMENT;

THENCE S73°06'23"W, ALONG SAID NORTH LINE, A DISTANCE OF 20.00 FEET TO THE POINT OF BEGINNING.

THE ABOVE DESCRIBED PARCEL OF LAND CONTAINS 5,840.00 SQUARE FEET (0.1341 ACRE) OF LAND, MORE OR LESS, INCLUDING ANY EASEMENTS OF RECORD.

THE BASIS OF BEARING FOR THE ABOVE DESCRIPTION IS S 89°29'18" E FOR THE SOUTH LINE OF THE SOUTHWEST QUARTER OF SECTION 32, TOWNSHIP 1 SOUTH, RANGE 7 EAST OF THE GILA & SALT RIVER MERIDIAN, CITY OF MESA, MARICOPA COUNTY, ARIZONA, AS SHOWN ON THE PLSS SUBDIVISION RECORD OF SURVEY-MARICOPA COUNTY GEODETIC DENSIFICATION AND CADASTRAL SURVEY RECORDED IN BOOK 609, PAGE 29, MARICOPA COUNTY RECORDS.

SKYBRIDGE
PROJECT No.: 220122
LEASE AREA REMOVAL (LAR-01)

Date: 10/11/21

Preparing Firm: RPA RITOCH-POWELL & Associates
602-263-1177
www.rpaeng.com

REGISTERED LAND SURVEYOR
CERTIFICATE NO.
57280
MARK R.
SANDWICK
Date Signed 10/11/21
ARIZONA, U.S.A.

Phoenix-Mesa Gateway Airport Authority
5835 S Sossaman Road
Mesa, Arizona 85212-6014
www.gatewayairport.com

Board Action Item

Re: Resolution 21-58

To: Board of Directors
From: Chuck Odom, Chief Financial Officer
Through: J. Brian O'Neill, A.A.E., Executive Director/CEO
Subject: Airport Rates and Charges- Recommended Hourly Parking Lot Rate Revision Effective December 22, 2021
Date: December 21, 2021

Proposed Motion
To eliminate the maximum daily charge for the Hourly Parking Lot effective December 22, 2021.

Narrative
As recovery continues from the COVID-19 pandemic, Gateway Airport is experiencing a significant increase in commercial passenger activity. During the Thanksgiving Holiday travel period, both the Airport's Daily Parking Lot and Hourly Parking Lot filled to capacity and closed on the Wednesday morning before Thanksgiving. The Hourly Parking Lot filled with vehicles and closed because air travelers are willing to pay the $18.00 maximum daily charge instead of using available capacity in the Ray Road Economy Parking Lot.

The Hourly Parking Lot is critical to the successful, efficient operation of the Airport because it provides for the drop off and pick up of passengers in need of someone else's assistance to travel – elderly, underage, physical or mental limitations. Closure of the Hourly Parking Lot creates significant challenges and hardships for the traveling public. PMGAA staff believes that eliminating the maximum daily parking rate ($18.00) will make overnight parking in the Hourly Parking Lot much less attractive and will increase parking availability for those air travelers in need of assistance.

We propose the Airport Rates & Charges be modified to reflect the change below.

Parking Rates	Fee by Location	Rate	Daily Maximum Charge
*Grace Period first 10 minutes	Hourly Parking Lot	$1.00/30 minutes*	~~$18.00~~ $48.00
	Daily Parking Lot	$1.00/30 minutes*	$11.00
	Ray Rd Economy Parking Lot Uncovered	$1.00/30 minutes*	$ 7.00
	Ray Rd Economy Parking Lot Covered	$1.00/30 minutes*	$11.00

Fiscal Impact
To mitigate and discourage overnight parking, it is proposed that the daily rate be eliminated for the Hourly Parking Lot. Customers would be charged the current $1.00 per half hour rate until they exit the facility.

Attachment(s)
Proposed changes to Airport Rates & Charges

RESOLUTION NO. 21-58

WHEREAS, the Phoenix-Mesa Gateway Airport Authority ("Authority"), a joint powers airport authority formed pursuant to Arizona Revised Statute §28-8521 *et seq.* owns and operates the Phoenix-Mesa Gateway Airport ("Airport"); and

WHEREAS the Authority desires to eliminate the maximum daily charge for the Hourly Parking Lot effective December 22, 2021.

NOW, THEREFORE, BE IT RESOLVED by the Board of Directors of the Authority as follows:

> **The Board of Directors of the Authority hereby eliminates the maximum daily charge for the Hourly Parking Lot effective December 22, 2021. This resolution also authorizes the Chair or Executive Director/CEO to make such additions, deletions, and changes as may be approved by the Chair or Executive Director/CEO, necessary to carry out the purposes and intent of this Resolution.**
>
> Passed and adopted by the Authority this 21st day of December, 2021.

John Giles, Chair

ATTEST:

Misty Johnson, Clerk of the Board

APPROVED AS TO FORM:

Jill Casson Owen, Attorney

Airport Rates and Charges*

Effective ~~October 1~~December 22, 2021

This schedule of Airport Rates and Charges is subject to updates. For the latest schedule, please visit the Phoenix-Mesa Gateway Airport website at:
http://www.gatewayairport.com/PoliciesDocumentsandForms#BoardPolicies

Signatory Commercial Carriers	Scheduled, FAR Part 121 and 129 operators, with a 90-day rolling average of 90 or more departures per month.		
Non-Signatory Commercial Carriers	Scheduled, FAR Part 121 and 129 operators, with a 90-day rolling average of less than 90 departures per month.		
Aircraft Landing Fee	Signatory Commercial Carriers, $1.32 per 1,000 lbs. maximum gross landing weight (MGLW). Non-Signatory Commercial Carriers, General Aviation and other eligible aircraft $1.98 per 1,000 lbs. MGLW. *Exemptions:* 1. U.S. Government owned aircraft 2. Non-revenue and flight training aircraft up to 12,500 MGLW 3. All based flight training school aircraft		
Aircraft Terminal Use Fee	Signatory Commercial Carriers - $50 per Turn Non-Signatory Commercial Carriers - $75 per Turn		
	Commercial Carriers with no operating agreement, see page 2 Non-Operating Agreement Passenger Terminal – Common Use Areas and Equipment		
Aircraft Parking Fee	**Aircraft Passenger Capacity**	**Signatory**	**Non-Signatory**
	1-69	$ 35	$ 53
	70-250	$ 70	$105
	251 or greater	$100	$150
	Will be assessed for the occupancy of an aircraft parking position for more than 3 hours, including terminal gates and remote parking positions, and for each additional 24 hour period.		
Airport Car Rental Customer Facility Charge (CFC)	$2.50 per vehicle rental day		
Aviation Fuel Flowage Fees	Fuel Flowage Fees are paid to PMGAA by any entity or person dispensing or receiving fuel on the Airport in accordance with PMGAA Aviation Fuel Storage, Dispensing & Handling Guidelines.		
	Signatory Commercial Carriers by agreement		
	Non-Signatory Commercial Carriers - $.05 per gallon		
	All Others - $0.12 per gallon		
Fire Suppression Services	$.50 per year per square foot of floor space + $250.00 set-up charge, billed in monthly installments. 15% of annual fees required as security deposit. South ramp connection fee = $209,746.00		
Parking Rates *Grace Period first 10 minutes	**Fee by Location**	**Rate**	**Daily Maximum Charge**
	Hourly Parking Lot	$1.00 / 30 minutes*	~~$18.00~~$48.00
	Daily Parking Lot	$1.00 / 30 minutes*	$11.00
	Ray Rd Economy Parking Lot Uncovered	$1.00 / 30 minutes*	$ 7.00
	Ray Rd Economy Parking Lot Covered	$1.00 / 30 minutes*	$11.00

All Airport Rates and Charges may vary due to terms defined in specific agreements.
Late payments are subject to a 1.5% finance charge. Payment terms are net 30 days unless otherwise specified.

	Lost Token Fee with itinerary = Days of Stay x Parking Lot Rate + $20 Lost Token & Admin Fee Lost Token Fee without itinerary (may be adjusted later with proof of itinerary)		$250.00
Passenger Facility Charge (PFC)	$4.50 per enplaned commercial passenger, Per FAA Approved PFC Application; reference Federal Register: (Vol. 79, Number 3)		
Airport Licenses & Permits	Fuel Dispensing Permit	$100.00 per organization, permit valid for 2 years	
	Fuel Handling Permit (includes exam)	$15.50 per individual, permit valid for 2 years	
	Fuel Storage & Service Equipment Permit	$38.00 per filtration vessel, permit valid for 2 years	
Common Use Terminal Equipment	Signatory Commercial Carriers	$1,250 per month	
	Non-Signatory Commercial Carriers	$ 500 per month	

Common Use Area - Operational Surcharges

Item	Description	Area	Operation	Surcharge
Operational Surcharges	Charges for exceeding allocated time slots on common use areas	Ticket counter or gate	Occupying a gate after the scheduled allocation time, resulting in aircraft holding or gate change	$200 per hour
		Use of ticket counter or gate without prior permission.		$200 plus regular fees
		Failure to use allocated time slot without 48-hour cancellation notice	Negatively impacting another scheduled carrier or causing Airport to shift resources to accommodate.	$200 plus regular fees

Transient Air Carrier Passenger Terminal – Common Use Areas and Equipment Rates

Item	Description	Aircraft Passenger Capacity	Resources Included	Rate
Full Service	Includes ticket counter(s) and lobby area, secure hold room and boarding area podium, aircraft parking position (2 hours), baggage claim area, and common use computer equipment per flight, as scheduled by Airport Operations. 1 ticket counter = 2 positions	1-69	1 ticket counter, 1 gate podium, 1 shared use hold room, 1 baggage belt, 1 aircraft parking spot	$ 260 per flight
		70-250	2 ticket counters, 1 gate podium, 1 shared use hold room, 1 baggage belt, 1 aircraft parking spot	$ 495 per flight
		251 or greater	3 ticket counters, 2 gate podiums, 2 shared use hold rooms, 1 baggage belt, 1 aircraft parking spot	$ 915 per flight
Ticket Counter and Lobby	Use of 1 ticket counter and shared use of the lobby area for up to 2.5 hours. Includes common use equipment.	1-69	1 ticket counter and lobby	$ 75 per flight
		70-250	2 ticket counters and lobby	$150 per flight
		251 or greater	3 ticket counters and lobby	$ 225 per flight
Boarding Gates – Secured Hold Room	Shared use of secured boarding gate area for up to 2 hours and one aircraft parking position. Includes use of gate podium, common use equipment, and one passenger boarding ramp.	1-69	1 gate podium and 1 hold room	$110 per flight
		70-250	1 gate podium and 1 hold room	$220 per flight

All Airport Rates and Charges may vary due to terms defined in specific agreements.
Late payments are subject to a 1.5% finance charge. Payment terms are net 30 days unless otherwise specified.

		251 or greater	2 gate podiums and 2 hold rooms	$ 440 per flight
Baggage Claim	Use of baggage claim area and baggage delivery belt/slide. Includes aircraft parking position*. * if associated with a live departure within 3 hours of arrival. Otherwise standard aircraft parking fee applies.	1-69	1 belt, oversize slide, aircraft parking*	$ 75 per flight
		70-250	1 belt, oversize slide, aircraft parking*	$125 per flight
		251 or greater	2 belts, oversize slide, aircraft parking*	$ 250 per flight

U.S. Customs and Border Protection

U.S. Customs and Border Protection (CBP) Service User Fees	**Category (based on MGLW)**	**Inspection Fee (per aircraft arrival)**
	<5,000	$80.00
	5,001 – 12,500	$250.00
	12,501 – 35,000	$350.00
	35,001 – 100,000	$480.00
	100,001 – 255,000	$670.00
	> 255,000	$830.00
	Regular service hours are Monday – Friday, 1100 – 1900 hrs. (MST). After-hours by appointment only. For after-hours appointments, there will be a minimum two-hour fee of $415.00 per inspector in addition to the standard user fee shown above. Two hours after the aircraft's scheduled arrival time, each additional 30 minutes required of the U.S. Customs Inspector will incur a $61.00 fee above the $415.00 minimum each.	

Gateway Aviation Services (Fixed Based Operator) Rates and Charges

		Category (based on MGLW)	Monthly Tie-Down Fee (2-month minimum)
Aircraft Open Ramp Tie-Down Fees (Space subject to availability)		<5,000 lbs.	$44.00
		5,001 – 12,500 lbs.	$98.00
		12,501 – 35,000 lbs.	$201.00
		35,001 – 100,000 lbs.	$316.00
		100,001 – 255,000 lbs.	$672.00
		> 255,000 lbs.	$1,321.00
Daily Ramp Fee	Max Gross Landing Weight	Rate	A purchase of the following fuel gallon minimums will waive the first Daily Ramp Fee per visit. A purchase of a meal from the restaurant located in the Gateway Aviation Center will equate to a $20.00 credit applicable to the first Daily Ramp Fee per visit.
	<5000	$20.00	10
	5,001-12,500	$30.00	75
	12,501-35,000	$90.00	150
	35,001-100,000	$200.00	200
	100,001-255,000	$300.00	500
	>255,001	$500.00	1,000

Phoenix-Mesa Gateway Airport Authority
5835 S Sossaman Road
Mesa, Arizona 85212-6014
www.gatewayairport.com

Board Action Item

Re: Resolution 21-59

To: Board of Directors
From: Shea Joachim, CEcD, Business Development Director
Through: J. Brian O'Neill, A.A.E., Executive Director/CEO
Subject: Preferred Respondent for Master Developer for GatewayEast
Date: December 21, 2021

Proposed Motion

To authorize a Memorandum of Understanding with The Boyer Company, L.C to acknowledge the Boyer Company, L.C. as the preferred proposer and establish an exclusive negotiation period and the terms under which PMGAA staff will work to establish a Master Development Agreement with the Boyer Company, L.C.

Narrative

On January 14, 2021 Phoenix-Mesa Gateway Airport Authority (PMGAA) hosted a virtual promotional event to highlight a roughly 400-acre, non-aeronautical development opportunity on the eastside of the Airport referred to as "GatewayEast.". The event was designed to showcase the Phoenix-Mesa Gateway Airport (Airport) to local, regional and international investors and real estate developers. The goal of the event was to generate interest from real estate development firms, or teams of firms, in PMGAA's competitive solicitation to play the role of Master Developer for GatewayEast.

PMGAA staff released a Request for Qualifications (RFQ) to solicit qualified firms to serve as Master Developer for GatewayEast on January 21, 2021. PMGAA established an evaluation team comprised of PMGAA staff members, a representative from a member government, and a real estate development expert from the private sector. PMGAA short-listed the respondents based on qualifications and issued a Request for Proposals (RFP) on May 13, 2021 directly to the four (4) most qualified firms. All of the four finalist firms submitted a competitive proposal for PMGAA's consideration, and all four finalists participated in an intensive interview process. The evaluation team reviewed the four proposals, along with the interview results, and invited the top two finalists to submit a "best and final" proposal.

The evaluation team recommends The Boyer Company, L.C. as the preferred respondent. As such, PMGAA staff recommends the Board authorize the attached Memorandum of Understanding (MOU) to acknowledge The Boyer Company, L.C. as the preferred proposer and establish an exclusive negotiation period in which PMGAA staff will work to establish a Master Development Agreement with The Boyer Company, L.C.

Fiscal Impact

The Memorandum of Understanding is a precursor to a Master Development Agreement and, as such, does not create any revenue or direct financial obligation.

Attachment(s)
Memorandum of Understanding

RESOLUTION NO. 21-59

WHEREAS, the Phoenix-Mesa Gateway Airport Authority ("Authority"), a joint powers airport authority formed pursuant to Arizona Revised Statute §28-8521 *et seq.* owns and operates the Phoenix-Mesa Gateway Airport ("Airport"); and

WHEREAS the Authority desires to authorize a Memorandum of Understanding with The Boyer Company, L.C. to acknowledge the Boyer Company, L.C. as the preferred proposer and establish an exclusive negotiation period and the terms under which PMGAA staff will work to establish a Master Development Agreement with the Boyer Company, L.C;

NOW, THEREFORE, BE IT RESOLVED by the Board of Directors of the Authority as follows:

> **The Board of Directors of the Authority hereby authorizes a Memorandum of Understanding with The Boyer Company, L.C to acknowledge the Boyer Company, L.C. as the preferred proposer and establish an exclusive negotiation period and the terms under which PMGAA staff will work to establish a Master Development Agreement with the Boyer Company, L.C. This resolution also authorizes the Chair or Executive Director/CEO to make such additions, deletions, and changes as may be approved by the Chair or Executive Director/CEO, necessary to carry out the purposes and intent of this Resolution.**

Passed and adopted by the Authority this 21st day of December, 2021.

John Giles, Chair

ATTEST:

Misty Johnson, Clerk of the Board

APPROVED AS TO FORM:

Jill Casson Owen, Attorney

MEMORANDUM OF UNDERSTANDING

BY AND BETWEEN

PHOENIX-MESA GATEWAY AIRPORT AUTHORITY,
a joint powers authority authorized by the State of Arizona

AND

The Boyer Company L.C.,
a Utah limited liability company

Dated as of December 21, 2021

MEMORANDUM OF UNDERSTANDING

THIS MEMORANDUM OF UNDERSTANDING ("**MOU**") is made as of December 21, 2021 (the "**Effective Date**"), by and between **PHOENIX-MESA GATEWAY AIRPORT AUTHORITY**, a joint powers authority authorized by the State of Arizona ("**PMGAA**"), and **THE BOYER COMPANY, L.C.**, a Utah limited liability company (the "**Developer**"). Individually, each of PMGAA and the Developer is a "**Party**" and collectively, they are the "**Parties**".

RECITALS

A. PMGAA operates the Phoenix-Mesa Gateway Airport (the "**Airport**"), which acts through its board of directors comprised of elected officials from the communities surrounding the Airport, namely the City of Mesa, the Town of Gilbert, the Town of Queen Creek, the Gila River Indian Community, the City of Phoenix, and the City of Apache Junction (the "**Members**" and when referring to each Member specific community, "**Member Communities**").

B. In furtherance of its mission to develop, reuse, operate, and maintain the Airport and facilities at the Phoenix-Mesa Gateway Airport, PMGAA commenced a competitive solicitation process to select a master developer for the GatewayEast Business Park ("**GatewayEast**") at the Airport, a depiction of which is set forth on **Exhibit A** attached hereto (collectively, the "**Project**"). The Parties acknowledge and understand that PMGAA and the Airport are at all times subject to, and must abide by, the terms and conditions of that certain Amended and Restated Joint Powers Airport Authority Agreement, dated on or about July 19, 2013, rules and regulations promulgated by the Federal Aviation Administration ("**FAA**"), A.R.S. §28-8531 et seq. (as amended), and other federal, state and local statutes, rules and regulations and the PMGAA "Airport Minimum Standards," "Airport Rules and Regulations," and other Airport published rules and regulations, as amended from time to time (the "**Governing Provisions**").

C. Through the Project, PMGAA intends to achieve the following primary goals:

(i) to develop GatewayEast's real estate assets and increase the value of such assets;

(ii) to increase employment opportunities for the Member Communities;

(iii) to enhance the profitability of the Airport through increased lease revenues as well as the development of complementary commercial activities at the Airport;

(iv) to develop the Airport in a manner that is environmentally, economically, and socially sustainable; and

(v) to generate new tax and fee revenues to the Airport and the Member Communities.

D. The Developer was included in a shortlist as a qualifying team pursuant to PMGAA's Request for Qualifications #2021-016-RFQ (the "**RFQ**"), which sought to identify qualified firms or teams of firms to serve as master developer for GatewayEast.

E. As one of the qualifying teams identified on the shortlist of responders to the RFQ, the Developer submitted a response to PMGAA's Request for Proposals #2022-001-RFP (the "**RFP**"), pursuant to which the Developer presented to PMGAA its proposal to develop GatewayEast as a hub for retail, hospitality, manufacturing, office, and other non-aeronautical uses that leverage the competitive advantages of the Member Communities (collectively, the "**Project Proposal**").

F. After reviewing the responses to the RFP and considering the stated goals and objectives of the Project, PMGAA has determined that the Developer is the preferred proposer under the RFP and, accordingly, wishes to enter into exclusive negotiations with the Developer to negotiate the terms of a Master Development Agreement ("**MDA**") to be entered into by and between PMGAA, in its capacity as the owner of the Airport and GatewayEast, and the Developer, in its capacity as master developer of GatewayEast.

G. This MOU sets forth the principal terms and conditions pursuant to which PMGAA and the Developer propose to enter into exclusive negotiations in respect of the agreements giving effect to the Developer's appointment as master developer of GatewayEast pursuant to the Project Proposal, including, but not limited to, the MDA, a list of Project defined terms, construction agreements, architectural agreements, management agreements, lease and sublease agreements, facilities use agreements, parking agreements and other related agreements as necessary or appropriate (collectively, the "**Definitive Agreements**").

NOW, THEREFORE, in consideration of the foregoing premises and the mutual promises and agreements set forth herein, the Parties state, confirm, and agree (subject to Section 13 below) as follows:

AGREEMENT

SECTION 1. **Exclusivity**. Unless this MOU is terminated pursuant to Section 12, for a period of 90 days following the Effective Date; provided that such initial 90-day period may be extended for up to three (3) additional periods of 30 days each if the Parties mutually agree to extend prior the end of each applicable period (the "**Exclusivity Period**"). During the Exclusivity Period, the Parties agree as follows:

(a) The Parties shall, on an exclusive basis, continue to discuss the Project and negotiate the terms of the Definitive Agreements in good faith;

(b) for all purposes under the RFP, the Developer shall be designated as the "preferred proposer" and the Parties shall use their respective commercially reasonable efforts and devote such time and attention as may be reasonably required to draft, negotiate, and finalize the Definitive Agreements;

(c) neither Party shall take any action (or fail to take any action) that would have the effect of making the Project impossible to consummate or that would otherwise frustrate

the purpose of the Project or the appointment of the Developer (or its affiliate as approved by PMGAA) as the master developer of GatewayEast, all as set forth in the Project Proposal and, at all times, notwithstanding anything to the contrary in this MOU, subject to PMGAA's obligations under the Governing Provisions (and, for the avoidance of doubt, PMGAA's compliance with the Governing Provisions shall in no way be deemed to be a breach of this MOU (including this Section 1) or the Definitive Agreements);

(d) each Party shall notify the other in writing within ten (10) days of becoming aware of the occurrence of any event that would reasonably be likely to result in the failure to consummate the Project or would otherwise materially frustrate the purpose of the Project or the appointment of the Developer as the master developer of GatewayEast, all as set forth in the Project Proposal;

(e) each Party shall use their respective commercially reasonable efforts to assist the other (at the requesting Party's sole cost and expense) in obtaining such information, licenses, permits, or authorizations as may be necessary or advisable for the consummation of the Project, all as set forth in the Project Proposal; and

(f) PMGAA shall authorize the Developer or its designees, during reasonable business hours and without interruption to the business of the Airport, to enter upon the property of the Airport for the purpose of performing such reasonable inspections, assessments, and other forms of due diligence as the Developer may request from time to time.

SECTION 2. Project Overview.

(a) The Parties contemplate the Definitive Agreements would include a master development agreement governing the Project, a master lease covering property under development, and development leases covering individual lots/parcels as they are developed and moved from the master lease to a development lease.

(b) PMGAA would at all times own the real property on which the Project would be developed and receive consideration from the Developer in accordance with the Project Proposal and as more fully set forth in the Definitive Agreements.

(c) In accordance with the Project Proposal and as more fully set forth in the Definitive Agreements, the Developer would design, construct, develop, use, and maintain the Project as a high-quality business park with retail, hospitality, manufacturing, industrial and office development within GatewayEast, with the goal of attracting "Class A" tenants to GatewayEast.

(d) Development of GatewayEast would be completed in phases, as set forth in the Project Proposal and to be further defined in the Definitive Agreements. Each phase would involve the development of utilities and infrastructure related to such phase. The first phase of the Project will reflect the Developer's proposal for the Starting Point which is more clearly described in the Project Proposal and depicted in **Exhibit B**.

(e) The Developer would develop 100% of the horizontal infrastructure requirements. With regards to the buildings and other vertical infrastructure, the Developer intends to develop such infrastructure in accordance with Section 7(e) below. Finally, the Developer

would work closely with PMGAA to attract local and foreign partners to develop the vertical construction of the Project through "build to suit" or "spec building" plans. The Developer intends to grow the Project incrementally, as demand grows and at all times pursuant to minimum performance thresholds established in the Definitive Agreements.

(f) All permanent improvements to real property made to the Airport property leased by the Developer shall inure to the benefit of PMGAA as provided in the Definitive Agreements.

(g) GatewayEast would be developed according to construction plans and specifications to be set forth in, or approved pursuant to procedures set forth in, the Definitive Agreements.

(h) GatewayEast would be constructed, and continuously maintained and operated, in accordance with standards to be set forth in the Master Plan (as such term is defined below).

(i) Delegated Authority: PMGAA (or its duly authorized designee), as the entity vested by the Member Communities with authority over the Airport, would be the sole point of contact for the Developer on all matters related to the Definitive Agreements.

SECTION 3. Easements. Given the current stage of the Project, all necessary easements for the Project may not be identifiable at this time. The Parties would identify such easements in the Definitive Agreements or, if not available at such time, would agree to cooperate in good faith to grant to each other (and to assist one another in obtaining such third party easements as may be necessary) to allow for the efficient operation of the Project; provided, that nothing herein shall require any Party to grant any further easement if such further easement would materially interfere with the grantor's use or intended use of its own property.

SECTION 4. Closing. The closing of the Project would occur as provided in the Definitive Agreements in Mesa, Arizona, or at such place and time as the Parties may mutually agree.

SECTION 5. Lease. Pursuant to the terms of the Definitive Agreements, PMGAA would lease real property on which the Project would be developed, free and clear of encumbrances other than permitted encumbrances to be set forth in the Definitive Agreements, except as subordinate to, or limited by, FAA regulation or other applicable federal, state or local law. The general terms and conditions of the lease or leases shall be as follows:

(a) Standard Terms & Conditions: The terms and conditions of all land lease agreements included as part of the Definitive Agreements would generally match the PMGAA Template Ground Lease Agreement included as Exhibit D to the RFP, as further negotiated by the Parties during the Exclusivity Period. Additionally, the leases in favor of Developer or its affiliate will contain commercially reasonable terms in favor of the leasehold mortgagee to facilitate the financing of the development of the Project. The term of all land lease agreements will be up to 65 years in length.

(b) Consideration: In consideration for granting development rights to the Developer, the Developer would (i) undertake the obligations summarized in this MOU to be performed by Developer, including, without limitation, the Developer's improvements to the real property on which the Project will be built (including underlying infrastructure improvements), but in all events as more fully set forth in the Definitive Agreements, and (ii) pay PMGAA the amounts set forth in the Definitive Agreements. Consideration to PMGAA will be consistent with the Project Proposal and to be further defined in the Definitive Agreements.

(c) Operating Standards: The Definitive Agreements would set forth the operating standards, specifications, policies, procedures, and processes that would apply to the operation and maintenance of GatewayEast. Such operating standards will be consistent with and adhere to the Airports Minimum Standards, Airport Rules and Regulations, and any other published documents to which PMGAA and parties conducting business with PMGAA and/or on PMGAA property are required to comply.

(d) Revenues: The Developer would at all times during the term of the leases have the right, title, entitlement, and interest in and to all revenues generated from its real estate development activities.

(e) Reporting, Audits, Inspections, Records: The Developer would provide scheduled reports to PMGAA, as more specifically set forth in the Definitive Agreements, including in respect of lessees. PMGAA would also have the right to inspect the books and records of the Developer and conduct audits, all as more fully set forth in the Definitive Agreements.

(f) Assignment and Sub-leasing: The Definitive Agreements would require the prior written consent of PMGAA to any assignment of the lease by the Developer; provided, however, that (i) the Developer, in its capacity as master developer of GatewayEast, would have the right to enter into subleases with sub-lessees meeting the minimum standards for eligibility established by PMGAA and the Developer in the Definitive Agreements, and (ii) the Developer would have the right to assign and pledge its rights under the lease to obtain financing for the development of GatewayEast (i.e., a leasehold mortgage), all subject to terms and conditions to be agreed upon with PMGAA in the Definitive Agreements, and applicable FAA and other federal, state and local laws.

(g) Term; Termination: The MDA would have an initial term of forty (40) years subject to renewal pursuant to the terms of the Definitive Agreements (as well as applicable FAA regulations).Prior to the expiration of the MDA, either PMGAA or the Developer may terminate the MDA if (i) the other Party files for bankruptcy protection (or equivalent procedure under federal or state law, including the appointment of a trustee, receiver, or other custodian for management of its property), or (ii) the other Party materially breaches the terms of the Definitive Agreements (excluding non-performance as contemplated in Section 5(h) below).

(h) Failure to Meet Performance Thresholds: Should the Developer fail to meet the performance thresholds set forth in the Definitive Agreements, then, as a remedy, PMGAA would have the right to terminate the MDA pursuant to such procedures (including, without limitation, cure periods) as the Parties shall agree and set forth in the Definitive Agreements.

SECTION 6. **Conditions Precedent**. The Parties' obligations to close under the Definitive Agreements would be subject to the following conditions:

(a) Award of the Proposal. PMGAA shall have awarded the Project to the Developer and appointed the Developer as the master developer of GatewayEast.

(b) Authorizations. Any and all applicable authorizations, consents, permits or licenses (including, but not limited to, any FAA approval of the Definitive Agreements and the transactions contemplated thereby) under applicable law that are necessary or convenient to enter into the Definitive Agreements shall have been obtained; provided that the Parties hereby acknowledge that, given the current stage of the Project, other authorizations, consents, permits or licenses will have to be obtained in order to perform the transactions, rights and obligations documented in the Definitive Agreements.

(c) Legal Proceedings. No preliminary or permanent injunction or other order, decree, or ruling issued by a governmental entity, and no statute, rule, regulation, or executive order promulgated or enacted by a governmental entity, shall be in effect that restrains, enjoins, prohibits or otherwise makes illegal the consummation of the Project as contemplated in the Project Proposal. No proceedings by a governmental entity shall have been commenced or be threatened against PMGAA or the Developer seeking to prevent or to challenge the transactions contemplated by this MOU; and no proceeding before a court of competent jurisdiction shall have been commenced against PMGAA or the Developer seeking to prevent or challenge the Project or seeking material damages in connection therewith.

(d) Plans, Designs, Specifications. The Developer shall have submitted designs, plans, specifications and an executive program to carry out the Phase I of the Project, which plans, designs and specifications shall have been approved by PMGAA, which approval shall not be unreasonably withheld, conditioned or delayed.

(e) Change in Technical and Financial Conditions. The technical and financial conditions under which PMGAA awarded the Project to the Developer shall remain substantially the same or in a manner that would not reasonably be expected to have any material adverse effect on the Project or PMGAA.

SECTION 7. **Obligations of the Developer**. The Developer would have the following obligations under the Definitive Agreements:

(a) Development. The Developer would be the master developer of GatewayEast and be responsible for the design, construction, development, use, and maintenance of GatewayEast pursuant to the terms of the Definitive Agreements, which would reflect terms consistent with this MOU and the Project Proposal.

(b) Delivery of Master Plan: No later than six (6) months following the execution and delivery of the Definitive Agreements, the Developer would deliver to PMGAA, for PMGAA's approval, a detailed master conceptual land use development plan (the "**Master Plan**") setting forth the Developer's anticipated investment and development plans for the Project's first TEN (10) years. Such Master Plan would be updated and amended on an as needed basis thereafter pursuant to a procedure set forth in the Definitive Agreements. The Developer

would produce all documents, reports, forms and other items necessary to obtain FAA approval of any changes to the Airport Layout Plan.

(c) Construction. The Developer would design and construct most of the infrastructure and facilities as described in Section 2(c) and Section 2(d). Subject to the terms and conditions to be set forth in the Definitive Agreements (including as a result of *force majeure* or other delay events), the Developer would construct (or cause the construction of) the corresponding infrastructure and facilities of the Project in a good and workmanlike manner consistent with the final Project description to be set forth in the Definitive Agreements (including in compliance with all applicable federal, state, and local codes, laws, ordinances, statutes, rules, and regulations).

(i) Construction Plans: The Developer would comply with all applicable laws, regulations, rules, codes, and ordinances in the design and construction of GatewayEast, and shall, prior to the commencement of construction of any phase or portion thereof, obtain PMGAA's prior written approval of the construction drawing and specifications, which approval shall not be unreasonably withheld. The Developer would periodically consult with designated representatives of PMGAA in connection with the design of GatewayEast.

(ii) Construction Standards. All improvements made to the Airport property leased by the Developer, including all infrastructure constructed thereon, would be completed in a workmanlike manner consistent with prevailing industry norms in the state of Arizona, all as more fully set forth in the Definitive Agreements.

(iii) Construction Financing: The Developer would obtain construction financing sufficient to construct GatewayEast substantially in accordance with the approved Master Plan.

(d) Marketing: The Developer would undertake responsibility for marketing and sub-leasing of retail, office, manufacturing, industrial, and hospitality space at GatewayEast, subject to FAA regulations and limitations, if any. To the extent that any third party proposes to PMGAA to use any portion of GatewayEast for any purpose, PMGAA would refer such party to the Developer, which, as master developer of GatewayEast, would negotiate the terms of such proposed use directly with such third party; provided that, subject at all times to FAA regulation and all other applicable federal, state or local laws, (i) to the extent that such third party is a governmental or other non-commercial entity that is proposing to conduct non-commercial activities within GatewayEast, the Developer would use its commercially reasonable efforts to accommodate such use to the extent not inconsistent with the Master Plan or materially adverse to the Developer (including in respect of financing or profits), and (ii) to the extent that such third party proposes to conduct commercial activities within GatewayEast, if an agreement is entered into by the Developer (in its sole discretion) and such third party with respect to a sublease of GatewayEast property for such commercial use, the Developer would pay to PMGAA a marketing fee in an amount set forth more fully in the Definitive Agreements.

(e) Vertical Development: PMGAA anticipates that the Developer would undertake most of the vertical development within GatewayEast. However, both PMGAA and the

Developer recognize that there may be end-users interested in GatewayEast that prefer to conduct their own vertical development. The Definitive Agreements will outline the processes and procedures to facilitate third-party vertical development including the calculation of commercially reasonable compensation to Developer.

(f) Insurance: The Developer would maintain such liability and property damage insurance, and would maintain or cause to be maintained such coverage, as may be agreed to by the Parties in the Definitive Agreements and consistent with existing PMGAA insurance requirements.

(g) Payments to PMGAA: To the extent the Developer develops GatewayEast; the Developer shall pay rent to PMGAA, as contemplated in Section 5(b) above.

(h) Disadvantaged Communities: The Developer would undertake commercially reasonable efforts, as agreed to by the Parties in the Definitive Agreements, to achieve participation by businesses and residents of the Member Communities, as well as disadvantaged minority-, women-, and veteran-owned business enterprises. Such participation to include such persons being engaged as contractors, subcontractors, vendors, suppliers, and employees.

(i) Community Liaison: The Developer would appoint a contact person to be a community liaison to meet regularly and on a scheduled basis with PMGAA to discuss community initiatives in which the Developer, in its role as master developer of GatewayEast, could assist, including initiatives to support the growth of the Airport. The community liaison would also work collaboratively with PMGAA to identify new potential growth opportunities.

SECTION 8. Obligations of PMGAA. PMGAA would have the following obligations under the Definitive Agreements:

(a) Airport Property Availability: PMGAA would continuously operate the Airport in substantially the same manner as the Airport is being operated as of the date hereof, and hold the Airport property designated for GatewayEast available for the Developer's quiet use pursuant to the terms of the Definitive Agreements (including the lease of such real property).

(b) Economic Incentives: PMGAA would, subject to compliance with all applicable federal, state, and local laws, use its commercially reasonable efforts to (i) make available to the Developer, and assist the Developer in obtaining, such economic incentives as PMGAA and the Developer determine may be reasonable or necessary to attract tenants to GatewayEast, and (ii) use its municipal powers under federal, state, and local laws, as PMGAA deems reasonable in its sole discretion, to attract tenants to GatewayEast.

(c) Permits and Approvals: PMGAA would assist and support the Developer in obtaining all necessary permits, reviews, licenses, actions, consents, authorizations, and approvals as may be necessary for the completion of the Project, including the construction of all applicable infrastructure to be developed by the Developer on Airport property.

(d) No Conflicts: PMGAA would not enter into any contract, instrument, or undertaking that would (i) limit or conflict with its obligations under, or constitute a breach of any

Definitive Agreement, or (ii) be reasonably likely to result in the failure to consummate the Project or would otherwise materially frustrate the purpose of the Project.

SECTION 9. **Changes to the Project**. If, following approval of the Master Plan by the Developer and PMGAA, the Developer proposes to make any material change to the Project (as set forth in such Master Plan), such change would be submitted in advance in writing to PMGAA for its written approval (which would not be unreasonably withheld or delayed). Such notice of proposed change would be submitted to PMGAA with sufficient detail as to allow PMGAA a meaningful opportunity to evaluate the effect of such change on the Project. Any other change that does not constitute a material change could be implemented by the Developer in its sole discretion.

SECTION 10. **Representations and Warranties**. Each Party shall make representations and warranties in the Definitive Agreements.

SECTION 11. **Indemnification**. The Definitive Agreements would provide for indemnity obligations in the event that a Party breaches its respective obligations under the Definitive Agreements.

SECTION 12. **Term**. This MOU shall expire on the earlier of (a) the expiration of the Exclusivity Period or (b) the execution and delivery of the Definitive Agreements. This MOU may be terminated immediately upon delivery of written notification by either Party to the other Party.

SECTION 13. **Terms Non-binding/Approval**. Except with respect to Section 1 (Exclusivity) and Section 14(f) (Governing Law), and this Section 13, each of which shall be binding, the Parties acknowledge that this MOU is not intended to constitute a binding contract for the development and lease of GatewayEast or any portion thereof and that a binding contract for the development and lease of GatewayEast or any portion thereof will not exist unless and until the Parties have executed the Definitive Agreements approved by their respective counsel and management authority covering all essential terms of the proposed transaction. The Parties acknowledge that they have not attempted to set forth herein all essential terms of the proposed transaction, and that such essential terms have not been agreed upon by the Parties and are subject to further negotiations, notwithstanding that either or both of the Parties may expend substantial efforts and sums in anticipation of entering into the Definitive Agreements. The Parties acknowledge that in no event will this MOU be construed as an enforceable contract for the development and lease of GatewayEast or any portion thereof.

SECTION 14. **Miscellaneous Provisions**.

(a) Acknowledgment. Pursuant to Ariz. Rev. Stat. §38-511, the Developer hereby agrees and acknowledges that no person significantly involved in initiating, negotiating, securing, drafting or creating this MOU or the Definitive Agreements on behalf of the Developer, its agents, affiliates or subsidiaries may, at any time while this MOU or the Definitive Agreements are in effect, work for PMGAA or any other entity of the State of Arizona. As a result of the foregoing, the Developer acknowledges receipt of said notice as pursuant to Ariz. Rev. Stat. §38-511, as amended from time to time.

(b) No Partnership; Third Parties. Nothing herein shall create any partnership, joint venture, or other arrangement between the Developer and PMGAA. No term of provision of this MOU is intended to, or shall, be for the benefit of any person not a party hereto, and no such other person shall have any right to cause of action hereunder, except for transferees or assignees to the extent permitted hereby.

(c) Entire Agreement. This MOU constitutes the entire understanding between the Parties with respect to the subject matters hereof and supersedes any prior agreement, understanding, negotiation, or representation regarding the subject matters covered by this MOU.

(d) Amendments. No change or addition is to be made to this MOU except by a written amendment executed by PMGAA and the Developer.

(e) Successors and Assigns. This MOU shall inure to the benefit of, and shall be binding upon the Developer, PMGAA and their respective successors and assigns.

(f) Governing Law. This MOU shall be construed and enforced in accordance with the laws of the state of Arizona.

[Remainder of Page Intentionally Left Blank]

IN WITNESS WHEREOF, the Parties have caused this Memorandum of Understanding to be executed as of the day and year aforesaid.

PHOENIX-MESA GATEWAY AIRPORT AUTHORITY, a joint powers authority authorized by the State of Arizona

By:_____

Printed:_____

Title:_____

THE BOYER COMPANY L.C., a Utah limited liability company

By:_____

Printed:_____

Title:_____

<u>Exhibit A</u>

DEPICTION OF THE GATEWAYEAST PROPERTY

<u>Exhibit B</u>

DEPICTION OF THE STARTING POINT

Phoenix-Mesa Gateway Airport Authority
5835 S Sossaman Road
Mesa, Arizona 85212-6014
www.gatewayairport.com

Board Action Item

Re: Resolution 21-60

To:	**Board of Directors**
From:	**Margi EvanSon, Operations & Maintenance Director**
Through:	**Scott Brownlee, Deputy Director/COO**
	J. Brian O'Neill, A.A.E., Executive Director/CEO
Subject:	**CIP 998, PARCS System Replacement – PARCS Equipment: Scheidt & Bachmann**
Date:	**December 14, 2021**

Proposed Motion

To authorize the Executive Director/CEO and/or delegate to negotiate and execute a final contract for the Airport's Parking Access Revenue Control System (PARCS) Replacement, CIP 998, with Scheidt & Bachman USA, Inc. (S&B) for equipment installation and support and maintenance in an amount not to exceed $650,000.

Narrative

The current parking equipment was installed in 2007 and is outdated and limited in customer service functionalities. Outdated equipment results in higher costs related to customer service, lost efficiency, as well as physical and cyber security risk. There are increased maintenance costs to keep old hardware and software updated and functioning. The new system will have more advanced technology and functionalities.

Board authorization to negotiate and execute a final contract for our PARCS System Replacement will allow us to replace the outdated system with a new system having more advanced technology such as remote system access and customer service functionalities. A License Plate Recognition system will be installed to enhance security, customer service and provide for more accurate measures of parking lot usage and stronger fiscal controls.

The Notice of Request for Proposals (RFP), Solicitation 2022-003-RFP was issued on July 15, 2021 and advertised in the Arizona Business Gazette on July 22, 29, and August 5, 2021; it was also posted on the AzAA, ACC, ACI-NA and SWAAAE, and IPMI websites as well as the Phoenix Mesa Gateway Airport Authority website. In addition, the RFP was emailed to seven (7) prospective firms. PMGAA staff received five (5) proposals on August 26, 2021. The Evaluation Panel unanimously ranked S&B as the firm that best satisfied the requirements and had the best overall experience and qualifications for the project.

Fiscal Impact

This project is included in the FY22 Capital Improvement Plan, CIP 998.

Attachment(s)

N/A

RESOLUTION NO. 21-60

WHEREAS, the Phoenix-Mesa Gateway Airport Authority ("Authority"), a joint powers airport authority formed pursuant to Arizona Revised Statute §28-8521 *et seq.* owns and operates the Phoenix-Mesa Gateway Airport ("Airport"); and

WHEREAS the Authority desires to authorize the Executive Director/CEO and /or delegate to negotiate and execute a final contract for the Airport's Parking Access Revenue Control System (PARCS) Replacement, CIP 998, with Scheidt & Bachman USA, Inc. (S&B) for equipment installation and support and maintenance in an amount not to exceed $650,000.

NOW, THEREFORE, BE IT RESOLVED by the Board of Directors of the Authority as follows:

> **The Board of Directors of the Authority hereby authorizes the Executive Director/CEO and /or delegate to negotiate and execute a final contract for the Airport's Parking Access Revenue Control System (PARCS) Replacement, CIP 998, with Scheidt & Bachman USA, Inc. (S&B) for equipment installation and support and maintenance in an amount not to exceed $650,000. This resolution also authorizes the Chair or Executive Director/CEO to make such additions, deletions, and changes as may be approved by the Chair or Executive Director/CEO, necessary to carry out the purposes and intent of this Resolution.**
>
> Passed and adopted by the Authority this 21st day of December, 2021.

John Giles, Chair

ATTEST:

Misty Johnson, Clerk of the Board

APPROVED AS TO FORM:

Jill Casson Owen, Attorney

Phoenix-Mesa Gateway Airport Authority
5835 S Sossaman Road
Mesa, Arizona 85212-6014
www.gatewayairport.com

Board Action Item

Re: Resolution 21-61

To:	**Board of Directors**
From:	**Margi EvanSon, Operations & Maintenance Director**
Through:	**Scott Brownlee, Deputy Director/COO**
	J. Brian O'Neill, A.A.E., Executive Director/CEO
Subject:	**CIP 998, PARCS System Replacement – System Infrastructure: SDB, Inc.**
Date:	**December 14, 2021**

Proposed Motion

To authorize the Executive Director/CEO and/or delegate to negotiate and execute a final contract for the Airport's Parking Access Revenue Control System (PARCS) Replacement, CIP 998, with SDB, Inc. for system infrastructure in an amount not to exceed $375,000.

Narrative

The current parking system infrastructure has been installed in various phases, and layouts, since 2007. To standardize system architecture and enhance the physical infrastructure across all parking facilities, staff recommends that improvements be completed to support the implementation of the new Parking Access Revenue Control System (PARCS). Improvements include the rebuilding of the Daily Lot Entry/Exit Plazas to accommodate License Plate Recognition (LPR), the re-pulling of fiber optic cable to ensure data transmission reliability, and the installation of hardened network enclosures to ruggedize network equipment from a multitude of hazards.

PMGAA and SDB are both participants of the Mohave Educational Service Cooperative (MESC) Purchasing Group. Under MESC, SDB, Inc. was awarded Contract 19-SDB-0904 for Job Order Contracting, and it is through this competitive selection that PMGAA will utilize SDB, Inc. for this project. This contract is available upon request.

Fiscal Impact

This project is included in the FY22 Capital Improvement Plan, CIP 998.

Attachment(s)

N/A

RESOLUTION NO. 21-61

WHEREAS, the Phoenix-Mesa Gateway Airport Authority ("Authority"), a joint powers airport authority formed pursuant to Arizona Revised Statute §28-8521 *et seq.* owns and operates the Phoenix-Mesa Gateway Airport ("Airport"); and

WHEREAS the Authority desires to authorize the Executive Director/CEO and /or delegate to negotiate and execute a final contract for the Airport's Parking Access Revenue Control System (PARCS) Replacement, CIP 998, with SDB, Inc. for system infrastructure in an amount not to exceed $375,000.

NOW, THEREFORE, BE IT RESOLVED by the Board of Directors of the Authority as follows:

> **The Board of Directors of the Authority hereby authorizes the Executive Director/CEO and /or delegate to negotiate and execute a final contract for the Airport's Parking Access Revenue Control System (PARCS) Replacement, CIP 998, with SDB, Inc. for system infrastructure in an amount not to exceed $375,000. This resolution also authorizes the Chair or Executive Director/CEO to make such additions, deletions, and changes as may be approved by the Chair or Executive Director/CEO, necessary to carry out the purposes and intent of this Resolution.**

Passed and adopted by the Authority this 21st day of December, 2021.

John Giles, Chair

ATTEST:

Misty Johnson, Clerk of the Board

APPROVED AS TO FORM:

Jill Casson Owen, Attorney

Phoenix-Mesa Gateway Airport Authority
5835 S Sossaman Road
Mesa, Arizona 85212-6014
www.gatewayairport.com

Management Information Report

To: Board of Directors
From: Chuck Odom, Chief Financial Officer
Through: J. Brian O'Neill, A.A.E., Executive Director/CEO
Re: October 2021 Financials
Date: December 21, 2021

Attached is the monthly Financials Report for October 2021.

Phoenix-Mesa Gateway Airport Authority
AIRPORT - All Operations P&L
October, 2021

	Month of October 2021				Y-T-D as of October 2021			
	October FY21 Actual	October FY22 Actual	YOY Variance	B/(W)	YTD FY21 Actual	YTD FY22 Actual	Y-T-D Variance	B/(W)
Aeronautical Operating Revenues								
Aircraft Parking	18,582	20,151	1,569	8%	74,823	82,708	7,885	11%
Fuel Flowage Fees	86,569	42,882	(43,687)	-50%	279,209	181,043	(98,166)	-35%
Landing Fees	105,048	121,836	16,788	16%	443,688	483,760	40,072	9%
Lease Income Aero	199,414	254,541	55,127	28%	893,310	1,099,602	206,292	23%
Fuel Sales	554,144	521,580	(32,564)	-6%	1,866,619	1,766,668	(99,951)	-5%
Services Sold - Aero	894,418	314,345	(580,073)	-65%	2,396,620	1,373,502	(1,023,118)	-43%
Sub-total Aero Operating Revenues	1,858,175	1,275,335	(582,840)	-31%	5,954,269	4,987,283	(966,986)	-16%
Non-Aeronautical Operating Revenues								
Concessions	58,702	116,729	58,027	99%	188,557	329,205	140,648	75%
Lease Income Non-Aero	102,133	118,397	16,264	16%	418,721	479,547	60,826	15%
Parking	232,244	328,205	95,961	41%	951,701	1,486,702	535,001	56%
Rental Car Fees	56,832	131,861	75,029	132%	249,740	452,187	202,447	81%
Svcs Sold - Non Aero	1,190	2,052	862	72%	16,540	12,754	(3,786)	-23%
Sub-total Non-Aero Operating Revenues	451,101	697,244	246,143	55%	1,825,259	2,760,395	935,136	51%
Total Operating Revenues	**2,309,276**	**1,972,579**	**(336,697)**	**-15%**	**7,779,528**	**7,747,678**	**(31,850)**	**0%**
Operating Expenses								
Costs of Goods Sold	283,334	329,576	(46,242)	-16%	985,940	1,143,032	(157,092)	-16%
Personnel	815,308	631,641	183,667	23%	2,775,819	2,867,410	(91,591)	-3%
Comm & Utilities	71,485	78,495	(7,010)	-10%	359,204	381,927	(22,723)	-6%
Contractual Services	408,598	436,700	(28,102)	-7%	1,513,976	1,784,447	(270,471)	-18%
Insurance	50,235	46,071	4,164	8%	175,940	188,124	(12,184)	-7%
Other	14,552	12,561	1,991	14%	52,530	63,168	(10,638)	-20%
Repair & Maintenance	33,677	59,930	(26,253)	-78%	139,617	186,082	(46,465)	-33%
Supplies & Materials	49,186	115,536	(66,350)	-135%	210,055	386,880	(176,825)	-84%
Air Service Incentives [2,000,000]	0	0	0	0	0	0	0	0
Operating Contingency [2,353,258]	0	0	0	0	0	0	0	0
Total Operating Expenses	**1,726,375**	**1,710,510**	**15,865**	1%	**6,213,081**	**7,001,070**	**(787,989)**	-13%
Operating Income (Loss)	**582,901**	**262,069**	**(320,832)**	-55%	**1,566,447**	**746,608**	**(819,839)**	-52%
	25.2%	13.3%			20.1%	9.6%		

Depreciation	1,413,033		5,600,561
ARPA Act Recovery	0		
CRRSAA Act Recovery	4,175,991		
CARES Act Recovery	20,530,277	Fully Drawn	
	24,706,268		

Phoenix-Mesa Gateway Airport Authority
5835 S Sossaman Road
Mesa, Arizona 85212-6014
www.gatewayairport.com

Management Information Report

To: **Board of Directors**
From: **Chuck Odom, Chief Financial Officer**
Through: **J. Brian O'Neill, A.A.E., Executive Director/CEO**
Re: Solicitation Notification
Date: **December 21, 2021**

This report is to provide notification of the active and upcoming solicitations to help ensure compliance with the Phoenix-Mesa Gateway Airport Authority procurement transparency clause. The active activities include the following:

Active/Pending Solicitations

Type Solicitation	Number	Title	Anticipated Contract Award (Board Action)
Request for Proposals	2022-003-RFP	Parking Access Revenue Control System	December 2021
Request for Proposals	2022-001-RFP	Master Developer, Gateway*East*	December 2021

Future Solicitations

Type Solicitation	Number	Title	Scheduled for Release	Anticipated Contract Award (Board Action)
Request for Qualifications	2022-005-RFQ	Fabrication and Installation of Signs	December 2021	February 2022
Request for Qualifications	2022-013-RFQ	On-Call Cultural/Archeological Services	December 2021	March 2022
Invitation for Bid	2022-004-IFB	Taxiway W Rehabilitation	January 2022	March 2022

If you have any questions about the solicitations or the procurement process, please feel free to contact me at 480-988-7613.